Form 3160-3
(June 2015)

FORM APPROVED
OMB No. 1004-0137
Expires: January 31, 2018

UNITED STATES
DEPARTMENT OF THE INTERIOR
BUREAU OF LAND MANAGEMENT

APPLICATION FOR PERMIT TO DRILL OR REENTER

5. Lease Serial No.
NMNM108504

6. If Indian, Allotee or Tribe Name

1a. Type of work: ☑ DRILL ☐ REENTER

1b. Type of Well: ☑ Oil Well ☐ Gas Well ☐ Other

1c. Type of Completion: ☐ Hydraulic Fracturing ☐ Single Zone ☑ Multiple Zone

7. If Unit or CA Agreement, Name and No.

8. Lease Name and Well No.
VACA 24 FED COM
504H

2. Name of Operator
EOG RESOURCES INCORPORATED

9. API Well No.
30-025-54170

3a. Address
1111 BAGBY SKY LOBBY 2, HOUSTON, TX 77002

3b. Phone No. *(include area code)*
(713) 651-7000

10. Field and Pool, or Exploratory
RED HILLS/LOWER BONE SPRING

4. Location of Well *(Report location clearly and in accordance with any State requirements.*)*
At surface TR O / 678 FSL / 2390 FEL / LAT 32.110627 / LONG -103.525243
At proposed prod. zone TR C / 100 FNL / 2310 FWL / LAT 32.1375209 / LONG -103.5271467

11. Sec., T. R. M. or Blk. and Survey or Area
SEC 24/T25S/R33E/NMP

14. Distance in miles and direction from nearest town or post office*

12. County or Parish
LEA

13. State
NM

15. Distance from proposed* location to nearest property or lease line, ft. (Also to nearest drig. unit line, if any)
100 feet

16. No of acres in lease

17. Spacing Unit dedicated to this well
640.0

18. Distance from proposed location* to nearest well, drilling, completed, applied for, on this lease, ft.
20 feet

19. Proposed Depth
10920 feet / 21188 feet

20. BLM/BIA Bond No. in file
FED: NM2308

21. Elevations (Show whether DF, KDB, RT, GL, etc.)
3331 feet

22. Approximate date work will start*
07/24/2023

23. Estimated duration
25 days

24. Attachments

The following, completed in accordance with the requirements of Onshore Oil and Gas Order No. 1, and the Hydraulic Fracturing rule per 43 CFR 3162.3-3 (as applicable)

1. Well plat certified by a registered surveyor.
2. A Drilling Plan.
3. A Surface Use Plan (if the location is on National Forest System Lands, the SUPO must be filed with the appropriate Forest Service Office).
4. Bond to cover the operations unless covered by an existing bond on file (see Item 20 above).
5. Operator certification.
6. Such other site specific information and/or plans as may be requested by the BLM.

25. Signature
(Electronic Submission)

Name *(Printed/Typed)*
CRAIG RICHARDSON / Ph: (713) 651-7000

Date
04/05/2023

Title
Regulatory Specialist

Approved by *(Signature)*
(Electronic Submission)

Name *(Printed/Typed)*
CODY LAYTON / Ph: (575) 234-5959

Date
12/11/2024

Title
Assistant Field Manager Lands & Minerals

Office
Carlsbad Field Office

Application approval does not warrant or certify that the applicant holds legal or equitable title to those rights in the subject lease which would entitle the applicant to conduct operations thereon.
Conditions of approval, if any, are attached.

Title 18 U.S.C. Section 1001 and Title 43 U.S.C. Section 1212, make it a crime for any person knowingly and willfully to make to any department or agency of the United States any false, fictitious or fraudulent statements or representations as to any matter within its jurisdiction.

APPROVED WITH CONDITIONS

(Continued on page 2)

*(Instructions on page 2)

Approval Date: 12/11/2024

C-102 Submit Electronically Via OCD Permitting	State of New Mexico Energy, Minerals & Natural Resources Department OIL CONSERVATION DIVISION	Revised July 9, 2024 Submittal Type: ☒ Initial Submittal ☐ Amended Report ☐ As Drilled

WELL LOCATION AND ACREAGE DEDICATION PLAT

API Number	Pool Code	Pool Name
30-025-54170	51020	RED HILLS;LOWER BONE SPRING

Property Code	Property Name	Well Number
39180	VACA 24 FED COM	504H

OGRID No.	Operator Name	Ground Level Elevation
7377	EOG RESOURCES, INC.	3331'

Surface Owner: ☐ State ☐ Fee ☐ Tribal ☒ Federal

Mineral Owner: ☐ State ☐ Fee ☐ Tribal ☒ Federal

Surface Location

UL or lot no.	Section	Township	Range	Lot Idn	Feet from the N/S	Feet from the E/W	Latitude	Longitude	County
O	24	25-S	33-E	-	678' S	2390' E	N 32.1106270	W 103.5252430	LEA

Bottom Hole Location

UL or lot no.	Section	Township	Range	Lot Idn	Feet from the N/S	Feet from the E/W	Latitude	Longitude	County
C	13	25-S	33-E	-	100' N	2310' W	N 32.1375209	W 103.5271467	LEA

Dedicated Acres	Infill or Defining Well	Defining Well API	Overlapping Spacing Unit (Y/N)	Consolidated Code
640	INFILL	PENDING	Y	C

Order Numbers: PENDING COM AGREEMENT

Well Setbacks are under Common Ownership: ☐ Yes ☐ No

Kick Off Point (KOP)

UL or lot no.	Section	Township	Range	Lot Idn	Feet from the N/S	Feet from the E/W	Latitude	Longitude	County
N	24	25-S	33-E	-	50' S	2310' W	N 32.1089015	W 103.5271388	LEA

First Take Point (FTP)

UL or lot no.	Section	Township	Range	Lot Idn	Feet from the N/S	Feet from the E/W	Latitude	Longitude	County
N	24	25-S	33-E	-	100' S	2310' W	N 32.1090389	W 103.5271389	LEA

Last Take Point (LTP)

UL or lot no.	Section	Township	Range	Lot Idn	Feet from the N/S	Feet from the E/W	Latitude	Longitude	County
C	13	25-S	33-E	-	100' N	2310' W	N 32.1375209	W 103.5271467	LEA

Unitized Area or Area of Uniform Intrest	Spacing Unity Type	Ground Floor Elevation
COMM AGREEMENT	☒ Horizontal ☐ Vertical	3356'

OPERATOR CERTIFICATION

I hereby certify that the information contained herein is true and complete to the best of my knowledge and belief; and, if the well is a vertical or directional well, that this organization either owns a working interest or unleased mineral interest in the land including the proposed bottom hole location or has a right to drill this well at this location pursuant to a contract with an owner of a working interest or unleased mineral interest, or to a voluntary pooling agreement or a compulsory pooling order heretofore entered by the division.

If this well is a horizontal well, I further certify that this organization has received The consent of at least one lessee or owner of a working interest or unleased mineral interest in each tract (in the target pool or formation) in which any part of the well's completed interval will be located or obtained a compulsory pooling order from the division.

Kayla McConnell 12/11/2024

Signature Date

KAYLA MCCONNELL

Print Name

KAYLA_MCCONNELL@EOGRESOURCES.COM

E-mail Address

SURVEYORS CERTIFICATION

I hereby certify that the well location shown on this plat was plotted from field notes of actual surveys made by me or under my supervision, and that the same is true and correct to the best of my belief.

SUMMON DOMINGUEZ NEW MEXICO 24508 PROFESSIONAL SURVEYOR

9/11/2024 10:23:22 AM

Signature and Seal of Professional Surveyor Date

Certificate Number

Date of Survey: 05/21/2022

S:\SURVEY\EOG_MIDLAND\VACA_24\FINAL_PRODUCTS\LO_VACA_24_FED_COM_504H_C102_REV2.dwg EDWARD.SPARKS 9/11/2024 10:20 AM

C-102

Submit Electronically
Via OCD Permitting

State of New Mexico
Energy, Minerals & Natural Resources Department
OIL CONSERVATION DIVISION

Revised July 9, 2024

Submittal Type:
- [X] Initial Submittal
- [ ] Amended Report
- [ ] As Drilled

Property Name and Well Number

VACA 24 FED COM 504H

SURFACE LOCATION (SHL)
NEW MEXICO EAST
NAD 1983
X=791538 Y=404920
LAT.: N 32.1106270
LONG.: W 103.5252430
NAD 1927
X=750352 Y=404863
LAT.: N 32.1105023
LONG.: W 103.5247732
678' FSL 2390' FEL

KICK OFF POINT (KOP)
NEW MEXICO EAST
NAD 1983
X=790956 Y=404288
LAT.: N 32.1089015
LONG.: W 103.5271388
NAD 1927
X=749770 Y=404231
LAT.: N 32.1087767
LONG.: W 103.5266691
50' FSL 2310' FWL

UPPER MOST PERF. (UMP)
NEW MEXICO EAST
NAD 1983
X=790956 Y=404338
LAT.: N 32.1090389
LONG.: W 103.5271389
NAD 1927
X=749769 Y=404281
LAT.: N 32.1089142
LONG.: W 103.5266691
100' FSL 2310' FWL

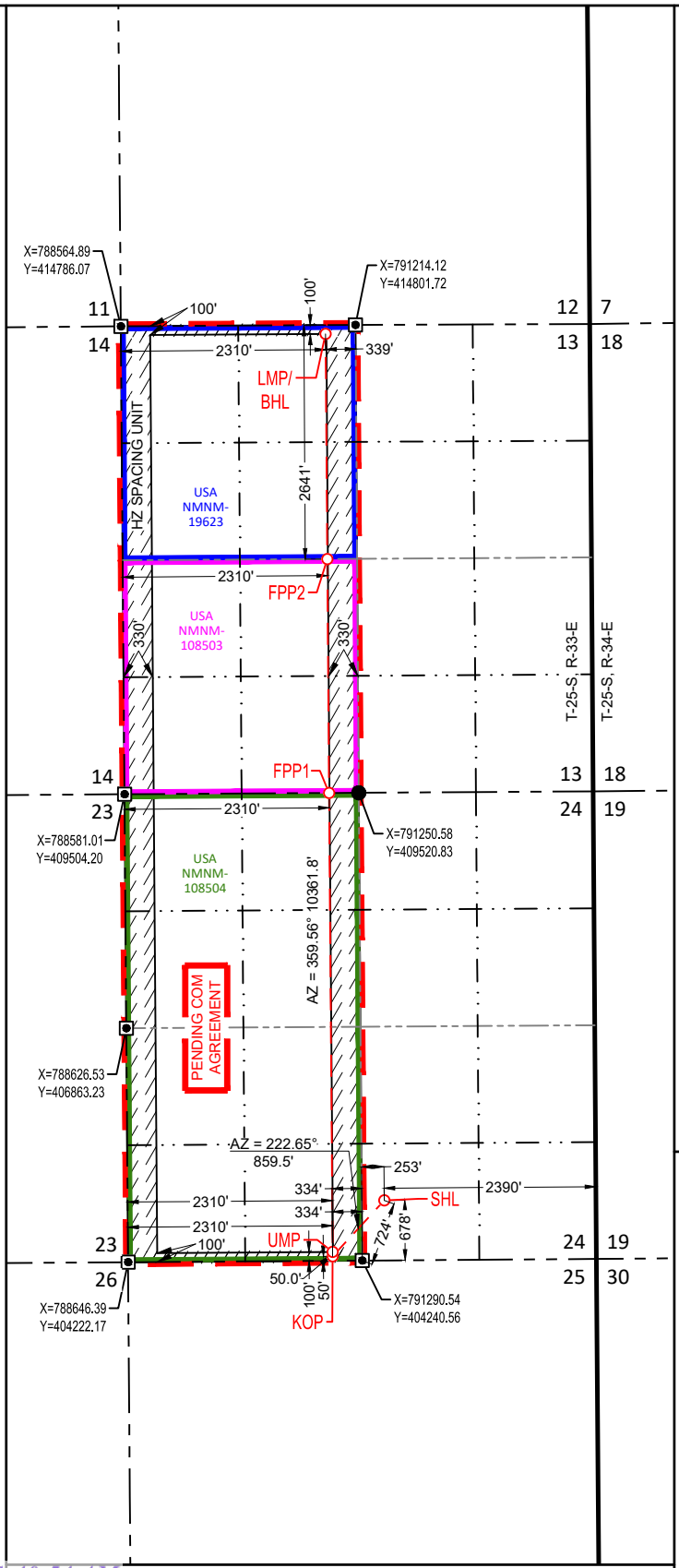

FED PERF. POINT (FPP1)
NEW MEXICO EAST
NAD 1983
X=790916 Y=409519
LAT.: N 32.1232792
LONG.: W 103.5271428
NAD 1927
X=749729 Y=409461
LAT.: N 32.1231546
LONG.: W 103.5266721
0' FNL 2310' FWL

FED PERF. POINT (FPP2)
NEW MEXICO EAST
NAD 1983
X=790895 Y=412159
LAT.: N 32.1305375
LONG.: W 103.5271448
NAD 1927
X=749709 Y=412101
LAT.: N 32.1304129
LONG.: W 103.5266737
2641' FNL 2310' FWL

LOWER MOST PERF. (LMP)
BOTTOM HOLE LOCATION (BHL)
NEW MEXICO EAST
NAD 1983
X=790876 Y=414700
LAT.: N 32.1375209
LONG.: W 103.5271467
NAD 1927
X=749690 Y=414642
LAT.: N 32.1373963
LONG.: W 103.5266751
100' FNL 2310' FWL

SURVEYORS CERTIFICATION

I hereby certify that the well location shown on this plat was plotted from field notes of actual surveys made by me or under my supervision, and that the same is true and correct to the best of my belief.
05/21/2022
Date of Survey
Signature and Seal of Professional Surveyor:

RAMON DOMINGUEZ
NEW MEXICO
24508
PROFESSIONAL SURVEYOR

S:\SURVEY\CDG_MIDLAND\VACA_24\FINAL_PRODUCTS\LO_VACA_24_FED_COM_504H_C-102_REV2.dwg EDWARD SPARKS 9/11/2024 10:23 AM

State of New Mexico
Energy, Minerals and Natural Resources Department

Submit Electronically
Via E-permitting

Oil Conservation Division
1220 South St. Francis Dr.
Santa Fe, NM 87505

NATURAL GAS MANAGEMENT PLAN

This Natural Gas Management Plan must be submitted with each Application for Permit to Drill (APD) for a new or recompleted well.

Section 1 – Plan Description

Effective May 25, 2021

I. Operator: ___EOG Resources, Inc._____ **OGRID:** _____7377_____ **Date:** 12/05/2024

II. Type: ☒ Original ☐ Amendment due to ☐ 19.15.27.9.D(6)(a) NMAC ☐ 19.15.27.9.D(6)(b) NMAC ☐ Other.

If Other, please describe: _____

III. Well(s): Provide the following information for each new or recompleted well or set of wells proposed to be drilled or proposed to be recompleted from a single well pad or connected to a central delivery point.

Well Name	API	ULSTR	Footages	Anticipated Oil BBL/D	Anticipated Gas MCF/D	Anticipated Produced Water BBL/D
VACA 24 FED COM 504H		O-24-25S-33E	678' FSL & 2390' FEL	+/- 1000	+/- 3500	+/- 3000

IV. Central Delivery Point Name: ___ VACA 24 FED COM CTB _____ [See 19.15.27.9(D)(1) NMAC]

V. Anticipated Schedule: Provide the following information for each new or recompleted well or set of wells proposed to be drilled or proposed to be recompleted from a single well pad or connected to a central delivery point.

Well Name	API	Spud Date	TD Reached Date	Completion Commencement Date	Initial Flow Back Date	First Production Date
VACA 24 FED COM 504H		1/01/25	1/26/25	02/1/25	03/1/25	03/15/25

VI. Separation Equipment: ☒ Attach a complete description of how Operator will size separation equipment to optimize gas capture.

VII. Operational Practices: ☒ Attach a complete description of the actions Operator will take to comply with the requirements of Subsection A through F of 19.15.27.8 NMAC.

VIII. Best Management Practices: ☒ Attach a complete description of Operator's best management practices to minimize venting during active and planned maintenance.

Section 2 – Enhanced Plan

EFFECTIVE APRIL 1, 2022

Beginning April 1, 2022, an operator that is not in compliance with its statewide natural gas capture requirement for the applicable reporting area must complete this section.

☒ Operator certifies that it is not required to complete this section because Operator is in compliance with its statewide natural gas capture requirement for the applicable reporting area.

IX. Anticipated Natural Gas Production:

Well	API	Anticipated Average Natural Gas Rate MCF/D	Anticipated Volume of Natural Gas for the First Year MCF

X. Natural Gas Gathering System (NGGS):

Operator	System	ULSTR of Tie-in	Anticipated Gathering Start Date	Available Maximum Daily Capacity of System Segment Tie-in

XI. Map. ☐ Attach an accurate and legible map depicting the location of the well(s), the anticipated pipeline route(s) connecting the production operations to the existing or planned interconnect of the natural gas gathering system(s), and the maximum daily capacity of the segment or portion of the natural gas gathering system(s) to which the well(s) will be connected.

XII. Line Capacity. The natural gas gathering system ☐ will ☐ will not have capacity to gather 100% of the anticipated natural gas production volume from the well prior to the date of first production.

XIII. Line Pressure. Operator ☐ does ☐ does not anticipate that its existing well(s) connected to the same segment, or portion, of the natural gas gathering system(s) described above will continue to meet anticipated increases in line pressure caused by the new well(s).

☐ Attach Operator's plan to manage production in response to the increased line pressure.

XIV. Confidentiality: ☐ Operator asserts confidentiality pursuant to Section 71-2-8 NMSA 1978 for the information provided in Section 2 as provided in Paragraph (2) of Subsection D of 19.15.27.9 NMAC, and attaches a full description of the specific information for which confidentiality is asserted and the basis for such assertion.

Section 3 - Certifications

Effective May 25, 2021

Operator certifies that, after reasonable inquiry and based on the available information at the time of submittal:

☒ Operator will be able to connect the well(s) to a natural gas gathering system in the general area with sufficient capacity to transport one hundred percent of the anticipated volume of natural gas produced from the well(s) commencing on the date of first production, taking into account the current and anticipated volumes of produced natural gas from other wells connected to the pipeline gathering system; or

☐ Operator will not be able to connect to a natural gas gathering system in the general area with sufficient capacity to transport one hundred percent of the anticipated volume of natural gas produced from the well(s) commencing on the date of first production, taking into account the current and anticipated volumes of produced natural gas from other wells connected to the pipeline gathering system.
If Operator checks this box, Operator will select one of the following:

Well Shut-In. ☐ Operator will shut-in and not produce the well until it submits the certification required by Paragraph (4) of Subsection D of 19.15.27.9 NMAC; or

Venting and Flaring Plan. ☐ Operator has attached a venting and flaring plan that evaluates and selects one or more of the potential alternative beneficial uses for the natural gas until a natural gas gathering system is available, including:

- **(a)** power generation on lease;
- **(b)** power generation for grid;
- **(c)** compression on lease;
- **(d)** liquids removal on lease;
- **(e)** reinjection for underground storage;
- **(f)** reinjection for temporary storage;
- **(g)** reinjection for enhanced oil recovery;
- **(h)** fuel cell production; and
- **(i)** other alternative beneficial uses approved by the division.

Section 4 - Notices

1. If, at any time after Operator submits this Natural Gas Management Plan and before the well is spud:

(a) Operator becomes aware that the natural gas gathering system it planned to connect the well(s) to has become unavailable or will not have capacity to transport one hundred percent of the production from the well(s), no later than 20 days after becoming aware of such information, Operator shall submit for OCD's approval a new or revised venting and flaring plan containing the information specified in Paragraph (5) of Subsection D of 19.15.27.9 NMAC; or

(b) Operator becomes aware that it has, cumulatively for the year, become out of compliance with its baseline natural gas capture rate or natural gas capture requirement, no later than 20 days after becoming aware of such information, Operator shall submit for OCD's approval a new or revised Natural Gas Management Plan for each well it plans to spud during the next 90 days containing the information specified in Paragraph (2) of Subsection D of 19.15.27.9 NMAC, and shall file an update for each Natural Gas Management Plan until Operator is back in compliance with its baseline natural gas capture rate or natural gas capture requirement.

2. OCD may deny or conditionally approve an APD if Operator does not make a certification, fails to submit an adequate venting and flaring plan which includes alternative beneficial uses for the anticipated volume of natural gas produced, or if OCD determines that Operator will not have adequate natural gas takeaway capacity at the time a well will be spud.

I certify that, after reasonable inquiry, the statements in and attached to this Natural Gas Management Plan are true and correct to the best of my knowledge and acknowledge that a false statement may be subject to civil and criminal penalties under the Oil and Gas Act.

Signature: Kayla McConnell
Printed Name: KAYLA MCCONNELL
Title: Regulatory Specialist
E-mail Address: KAYLA_MCCONNELL@EOGRESOURCES.COM
Date: 12/11/2024
Phone: (432) 265-6804

OIL CONSERVATION DIVISION **(Only applicable when submitted as a standalone form)**
Approved By:
Title:
Approval Date:
Conditions of Approval:

Natural Gas Management Plan
Items VI-VIII

VI. Separation Equipment: Attach a complete description of how Operator will size separation equipment to optimize gas capture.

- Separation equipment will be sized to provide adequate separation for anticipated rates.
- Adequate separation relates to retention time for Liquid – Liquid separation and velocity for Gas-Liquid separation.
- Collection systems are appropriately sized to handle facility production rates on all (3) phases.
- Ancillary equipment and metering is selected to be serviced without flow interruptions or the need to release gas from the well.

VII. Operational Practices: Attach a complete description of the actions Operator will take to comply with the requirements of Subsection A through F 19.15.27.8 NMAC.

Drilling Operations

- All flare stacks will be properly sized. The flare stacks will be located at a minimum 100' from the nearest surface hole location on the pad.
- All natural gas produced during drilling operations will be flared, unless there is an equipment malfunction and/or to avoid risk of an immediate and substantial adverse impact on safety and the environment, at which point the gas will be vented.

Completions/Recompletions Operations

- New wells will not be flowed back until they are connected to a properly sized gathering system.
- The facility will be built/sized for maximum anticipated flowrates and pressures to minimize waste.
- For flowback operations, multiple stages of separation will be used as well as excess VRU and blowers to make sure waste is minimized off the storage tanks and facility.
- During initial flowback, the well stream will be routed to separation equipment.
- At an existing facility, when necessary, post separation natural gas will be flared until it meets pipeline specifications, at which point it will be turned into a collection system.
- At a new facility, post separation natural gas will be vented until storage tanks can safely function, at which point it will be flared until it meets pipeline spec.

Production Operations

- Weekly AVOs will be performed on all facilities.
- All flares will be equipped with auto-ignition systems and continuous pilot operations.
- After a well is stabilized from liquid unloading, the well will be turned back into the collection system.
- All plunger lift systems will be optimized to limit the amount of waste.
- All tanks will have automatic gauging equipment installed.
- Leaking thief hatches found during AVOs will be cleaned and properly re-sealed.

Performance Standards

- Production equipment will be designed to handle maximum anticipated rates and pressure.
- All flared gas will be combusted in a flare stack that is properly sized and designed to ensure proper combustion.
- Weekly AVOs will be performed on all wells and facilities that produce more than 60 Mcfd.

Measurement & Estimation

- All volume that is flared and vented that is not measured will be estimated.
- All measurement equipment for flared volumes will conform to API 14.10.
- No meter bypasses with be installed.

- When metering is not practical due to low pressure/low rate, the vented or flared volume will be estimated.

VIII. Best Management Practices: Attach a complete description of Operator's best management practices to minimize venting during active and planned maintenance.

- During downhole well maintenance, EOG will use best management practices to vent as minimally as possible.
- Prior to the commencement of any maintenance, the tank or vessel will be isolated from the rest of the facilities.
- All valves upstream of the equipment will be closed and isolated.
- After equipment has been isolated, the equipment will be blown down to as low a pressure as possible into the collection system.
- If the equipment being maintained cannot be relieved into the collection system, it shall be released to a tank where the vapor can either be captured or combusted if possible.
- After downhole well maintenance, natural gas will be flared until it reaches pipeline specification.

eog resources

Vaca 24 Fed Com 504H

1. GEOLOGIC NAME OF SURFACE FORMATION:

Permian

2. ESTIMATED TOPS OF IMPORTANT GEOLOGICAL MARKERS:

Rustler	1,030'
Tamarisk Anhydrite	1,100'
Top of Salt	1,437'
Base of Salt	4,985'
Lamar	5,160'
Bell Canyon	5,188'
Cherry Canyon	6,173'
Brushy Canyon	7,740'
Bone Spring Lime	9,270'
Leonard (Avalon) Shale	9,327'
1st Bone Spring Sand	10,283'
2nd Bone Spring Shale	10,416'
2nd Bone Spring Sand	10,810'
3rd Bone Spring Carb	11,312'
3rd Bone Spring Sand	11,953'
Wolfcamp	12,361'
TD	10,920'

3. ESTIMATED DEPTHS OF ANTICIPATED FRESH WATER, OIL OR GAS:

Upper Permian Sands	0- 400’	Fresh Water
Bell Canyon	5,188'	Oil
Cherry Canyon	6,173'	Oil
Brushy Canyon	7,740'	Oil
Leonard (Avalon) Shale	9,327'	Oil
1st Bone Spring Sand	10,283'	Oil
2nd Bone Spring Shale	10,416'	Oil
2nd Bone Spring Sand	10,810'	Oil

No other Formations are expected to give up oil, gas or fresh water in measurable quantities. Surface fresh water sands will be protected by setting 13-3/8" casing at 1,130' and circulating cement back to surface.

eog resources

Vaca 24 Fed Com 504H

4. CASING PROGRAM

Hole Size	Interval MD From (ft)	Interval MD To (ft)	Interval TVD From (ft)	Interval TVD To (ft)	Csg OD	Weight	Grade	Conn
16"	0	1,130	0	1,130	13-3/8"	54.5#	J-55	STC
11"	0	4,063	0	4,000	9-5/8"	40#	J-55	LTC
11"	4,063	5,153	4,000	5,090	9-5/8"	40#	HCK-55	LTC
6-3/4"	0	21,188	0	10,920	5-1/2"	17#	HCP-110	LTC

Variance is requested to waive the centralizer requirements for the 9-5/8" casing in the 11" hole size. An expansion additive will be utilized, in the cement slurry, for the entire length of the 11" hole interval to maximize cement bond and zonal isolation.

Variance is also requested to waive any centralizer requirements for the 5-1/2" casing in the 6-3/4" hole size. An expansion additive will be utilized, in the cement slurry, for the entire length of the 6-3/4" hole interval to maximize cement bond and zonal isolation.

EOG requests permission to allow deviation from the 0.422'' annulus clearance requirement for the intermediate (salt) section from Onshore Order #2 under the following conditions:

- The variance is not applicable within the Potash Boundaries or Capitan Reef areas.
- Operator takes responsibility to get casing to set point in the event that the clearance causes stuck pipe issues.

Cementing Program:

Depth	No. Sacks	Wt. ppg	Yld Ft3/sk	Slurry Description
1,130' 13-3/8"	340	13.5	1.73	Lead: Class C + 4.0% Bentonite Gel + 0.5% CaCl2 + 0.25 lb/sk Cello-Flake (TOC @ Surface)
	100	14.8	1.34	Tail: Class C + 0.6% FL-62 + 0.25 lb/sk Cello-Flake + 0.2% Sodium Metasilicate (TOC @ 930')
5,090' 9-5/8"	480	12.7	2.22	Lead: Class C + 10% NaCl + 6% Bentonite Gel + 3% MagOx (TOC @ Surface)
	170	14.8	1.32	Tail: Class C + 10% NaCL + 3% MagOx (TOC @ 4072')
21,188' 5-1/2"	370	10.5	3.21	Lead: Class H + 0.4% Halad-344 + 0.35% HR-601 + 3% Microbond (TOC @ 4590')
	750	13.2	1.52	Tail: Class H + 5% NEX-020 + 0.2% NAC-102 + 0.15% NAS-725 + 0.5% NFL-549 + 0.2% NFP-703 + 1% NBE-737 + 0.3% NRT-241 (TOC @ 10510')

eog resources

Vaca 24 Fed Com 504H

Additive	Purpose
Bentonite Gel	Lightweight/Lost circulation prevention
Calcium Chloride	Accelerator
Cello-flake	Lost circulation prevention
Sodium Metasilicate	Accelerator
MagOx	Expansive agent
Pre-Mag-M	Expansive agent
Sodium Chloride	Accelerator
FL-62	Fluid loss control
Halad-344	Fluid loss control
Halad-9	Fluid loss control
HR-601	Retarder
Microbond	Expansive Agent

Cement integrity tests will be performed immediately following plug bump.

Note: Cement volumes based on bit size plus at least 25% excess in the open hole plus 10% excess in the cased-hole overlap section.

5. MINIMUM SPECIFICATIONS FOR PRESSURE CONTROL:

Variance is requested to use a co-flex line between the BOP and choke manifold (instead of using a 4" OD steel line).

The minimum blowout preventer equipment (BOPE) shown in Exhibit #1 will consist of a single ram, mud cross and double ram-type (10,000 psi WP) preventer and an annular preventer (5,000-psi WP). Both units will be hydraulically operated and the ram-type will be equipped with blind rams on bottom and drill pipe rams on top. All BOPE will be tested in accordance with Onshore Oil & Gas order No. 2.

EOG will utilize wing unions on BOPE connections that can be isolated from wellbore pressure through means of a choke. All wing unions will be rated to a pressure that meets or exceeds the pressure rating of the BOPE system.

Variance is requested to use a 5,000 psi annular BOP with the 10,000 psi BOP stack.

Before drilling out of the surface casing, the ram-type BOP and accessory equipment will be tested to 10,000/ 250 psig and the annular preventer to 5,000/ 250 psig.

Pipe rams and blind rams will be operationally checked on each trip out of the hole. These checks will be noted on the daily tour sheets.

A hydraulically operated choke will be installed prior to drilling out of the intermediate casing shoe.

eog resources

Vaca 24 Fed Com 504H

6. TYPES AND CHARACTERISTICS OF THE PROPOSED MUD SYSTEM:

During this procedure we plan to use a Closed-Loop System and haul contents to the required disposal.

The applicable depths and properties of the drilling fluid systems are as follows:

Depth	Type	Weight (ppg)	Viscosity	Water Loss
0 – 1,130'	Fresh - Gel	8.6-8.8	28-34	N/c
1,130' – 5,090'	Brine	8.6-8.8	28-34	N/c
4,890' – 21,188' Lateral	Oil Base	8.8-9.5	58-68	N/c - 6

An electronic pit volume totalizer (PVT) will be utilized on the circulating system, to monitor pit volume, flow rate, pump pressure and stroke rate.

Sufficient mud materials to maintain mud properties and meet minimum lost circulation and weight increase requirements will be kept at the wellsite at all times.

7. AUXILIARY WELL CONTROL AND MONITORING EQUIPMENT:

(A) A kelly cock will be kept in the drill string at all times.
(B) A full opening drill pipe-stabbing valve (inside BOP) with proper drill pipe connections will be on the rig floor at all times.
(C) H2S monitoring and detection equipment will be utilized from surface casing point to TD.

8. LOGGING, TESTING AND CORING PROGRAM:

(A) Open-hole logs are not planned for this well.
(B) GR–CCL will be run in cased hole during completions phase of operations.

9. ABNORMAL CONDITIONS, PRESSURES, TEMPERATURES AND POTENTIAL HAZARDS:

The estimated bottom-hole temperature (BHT) at TD is 179 degrees F with an estimated maximum bottom-hole pressure (BHP) at TD of 5,111 psig and a maximum anticipated surface pressure of 2,708 psig (based on 9.0 ppg MW). No hydrogen sulfide or other hazardous gases or fluids have been encountered, reported or are known to exist at this depth in this area. Severe loss circulation is expected from 7,740' to intermediate casing point.

eog resources

Vaca 24 Fed Com 504H

10. ANTICIPATED STARTING DATE AND DURATION OF OPERATIONS:

The drilling operation should be finished in approximately one month. If the well is productive, an additional 60-90 days will be required for completion and testing before a decision is made to install permanent facilities.

EOG Resources requests the option to contract a Surface Rig to drill, set surface casing, and Cement on the subject well. After WOC 8 hours or 500 psi compressive strength (whichever is greater), the Surface Rig will move off so the wellhead can be installed. A welder will cut the casing to the proper height and weld on the wellhead (both "A" and "B" sections). The weld will be tested to 1,500 psi. All valves will be closed and a wellhead cap will be installed (diagram attached). If the timing between rigs is such that EOG Resources would not be able to preset the surface, the Primary Rig will MIRU and drill the well in its entirety per the APD.

11. WELLHEAD & Offline Cementing:

A multi-bowl wellhead system will be utilized.

After running the 13-3/8" surface casing, a 13-3/8" BOP/BOPE system with a minimum working pressure of 10,000 psi will be installed on the wellhead system and will be pressure tested to 250 psi low followed by a 10,000 psi pressure test. This pressure test will be repeated at least every 30 days, as per Onshore Order No. 2.

The minimum working pressure of the BOP and related BOPE required for drilling below the surface casing shoe shall be 10,000 psi.

The multi-bowl wellhead will be installed by vendor's representative(s). A copy of the installation instructions for the Cactus Multi-Bowl WH system has been sent to the NM BLM office in Carlsbad, NM.

The wellhead will be installed by a third party welder while being monitored by WH vendor's representative.

All BOP equipment will be tested utilizing a conventional test plug. Not a cup or J-packer type. EOG Resources reserves the option to conduct BOPE testing during wait on cement periods provided a test plug is utilized.

A solid steel body pack-off will be utilized after running and cementing the intermediate casing. After installation the pack-off and lower flange will be pressure tested to 5000 psi.

Casing strings will be tested as per Onshore Order No. 2 to at least 0.22 psi/ft or 1,500 psi, whichever is greater.

eog resources

Vaca 24 Fed Com 504H

EOG Resources Inc. (EOG) respectfully requests a variance from the minimum standards for well control equipment testing of Onshore Order No. 2 (item III.A.2.a.i) to allow a testing schedule of the blow out preventer (BOP) and blow out prevention equipment (BOPE) along with Batch Drilling & Offline cement operations to include the following:

- Full BOPE test at first installation on the pad.
- Full BOPE test every 20 days per Onshore Order No. 2.
- Function test BOP elements per Onshore Order No. 2.
- Break testing BOP and BOPE coupled with batch drilling operations and option to offline cement and/or remediate (if needed) any surface or intermediate sections, according to attached offline cementing support documentation.
- After the well section is secured, the BOP will be disconnected from the wellhead and walked with the rig to another well on the pad.
- TA cap will also be installed per Wellhead vendor procedure and pressure inside the casing will be monitored via the valve on the TA cap as per standard batch drilling ops.
- See attached "EOG BLM Variance 3a -Offline Cement Intermediate Operational Procedure"

12. TUBING REQUIREMENTS

EOG respectively requests an exception to the following NMOCD rule:

- 19.15.16.10 Casing AND TUBING RQUIREMENTS:
  J (3): "The operator shall set tubing as near the bottom as practical and tubing perforations shall not be more than 250 feet above top of pay zone."

With horizontal flowing and gas lifted wells an end of tubing depth placed at or slightly above KOP is a conservative way to ensure the tubing stays clean from debris, plugging, and allows for fewer well interventions post offset completion. The deeper the tubulars are run into the curve, the higher the probability is that the tubing will become stuck in sand and or well debris as the well produces over time. An additional consideration for EOT placement during artificial lift installations is avoiding the high dog leg severity and inclinations found in the curve section of the wellbore to help improve reliability and performance. Dog leg severity and inclinations tend not to hamper gas lifted or flowing wells, but they do effect other forms of artificial lift like rod pump or ESP (electric submersible pump). Keeping the EOT above KOP is an industry best practice for those respective forms of artificial lift.

eog resources

Vaca 24 Fed Com 504H

678' FSL
2390' FEL
Section 24
T-25-S, R-33-E

Proposed Wellbore A

API: 30-025-*****

KB: 3356'
GL: 3331'

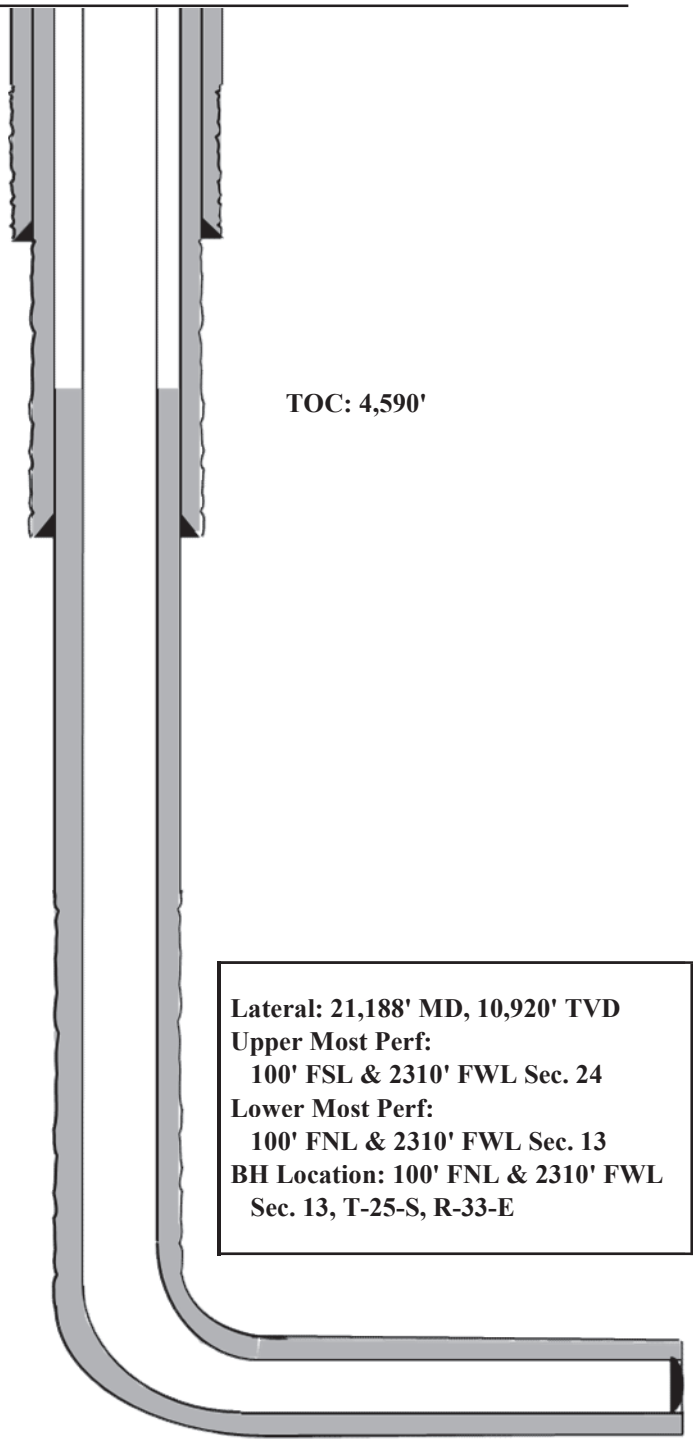

Bit Size: 16"
13-3/8", 54.5#, J-55, STC
@ 0' - 1,130'

Bit Size: 11"
9-5/8", 40.#, J-55, LTC
@ 0' - 4,000'
9-5/8", 40.#, HCK-55, LTC
@ 4,000' - 5,090'

TOC: 4,590'

Bit Size: 6-3/4"
5-1/2", 17.#, HCP-110, LTC
@ 0' - 21,188'

Lateral: 21,188' MD, 10,920' TVD
Upper Most Perf:
100' FSL & 2310' FWL Sec. 24
Lower Most Perf:
100' FNL & 2310' FWL Sec. 13
BH Location: 100' FNL & 2310' FWL
Sec. 13, T-25-S, R-33-E

KOP: 10,503' MD, 10,442' TVD
EOC: 11,253' MD, 10,920' TVD

Bit Size: 6-3/4"

eog resources

Vaca 24 Fed Com 504H

Well Name: Vaca 24 Fed Com 504H
Location: SHL: 678' FSL & 2390' FEL, Section 24, T-25-S, R-33-E, Lea Co., N.M.
BHL: 100' FNL & 2310' FWL, Section 13, T-25-S, R-33-E, Lea Co., N.M.

Casing Program B:

Hole Size	Interval MD From (ft)	Interval MD To (ft)	Interval TVD From (ft)	Interval TVD To (ft)	Csg OD	Weight	Grade	Conn
13-1/2"	0	1,130	0	1,130	10-3/4"	40.5#	J-55	STC
9-7/8"	0	4,063	0	4,000	8-5/8"	32#	J-55	BTC-SC
9-7/8"	4,063	5,153	4,000	5,090	8-5/8"	32#	P110-EC	BTC-SC
6-3/4"	0	21,188	0	10,920	5-1/2"	17#	HCP-110	LTC

Cementing Program:

Depth	No. Sacks	Wt. ppg	Yld Ft3/sk	Slurry Description
1,130' 10-3/4''	370	13.5	1.73	Lead: Class C + 4.0% Bentonite Gel + 0.5% CaCl2 + 0.25 lb/sk Cello-Flake (TOC @ Surface)
	110	14.8	1.34	Tail: Class C + 0.6% FL-62 + 0.25 lb/sk Cello-Flake + 0.2% Sodium Metasilicate (TOC @ 930')
5,090' 8-5/8''	340	12.7	2.22	Lead: Class C + 10% NaCl + 6% Bentonite Gel + 3% MagOx (TOC @ Surface)
	160	14.8	1.32	Tail: Class C + 10% NaCL + 3% MagOx (TOC @ 4,070')
21,188' 5-1/2''	590	10.5	3.21	Lead: Class H + 0.4% Halad-344 + 0.35% HR-601 + 3% Microbond (TOC @ 4,590')
	770	13.2	1.52	Tail: Class H + 5% NEX-020 + 0.2% NAC-102 + 0.15% NAS-725 + 0.5% NFL-549 + 0.2% NFP-703 + 1% NBE-737 + 0.3% NRT-241 (TOC @ 10510')

eog resources

Vaca 24 Fed Com 504H

Additive	Purpose
Bentonite Gel	Lightweight/Lost circulation prevention
Calcium Chloride	Accelerator
Cello-flake	Lost circulation prevention
Sodium Metasilicate	Accelerator
MagOx	Expansive agent
Pre-Mag-M	Expansive agent
Sodium Chloride	Accelerator
FL-62	Fluid loss control
Halad-344	Fluid loss control
Halad-9	Fluid loss control
HR-601	Retarder
Microbond	Expansive Agent

Wellhead & Offline Cementing:

EOG Resources Inc. (EOG) respectfully requests a variance from the minimum standards for well control equipment testing of Onshore Order No. 2 (item III.A.2.a.i) to allow a testing schedule of the blow out preventer (BOP) and blow out prevention equipment (BOPE) along with Batch Drilling & Offline cement operations to include the following:

- Full BOPE test at first installation on the pad.
- Full BOPE test every 30 days per Onshore Order No. 2.
- Function test BOP elements per Onshore Order No. 2.
- Break testing BOP and BOPE coupled with batch drilling operations and option to offline cement and/or remediate (if needed) any surface or intermediate sections, according to attached offline cementing support documentation.
- After the well section is secured, the BOP will be disconnected from the wellhead and walked with the rig to another well on the pad.
- TA cap will also be installed per Wellhead vendor procedure and pressure inside the casing will be monitored via the valve on the TA cap as per standard batch drilling ops.
- See attached "EOG BLM Variance 3a -Offline Cement Intermediate Operational Procedure"

eog resources

Vaca 24 Fed Com 504H

678'
2390'
Section 24
T-25-S, R-33-E

Proposed Wellbore B:

API: 30-025-***

KB: 3356'
GL: 3331'

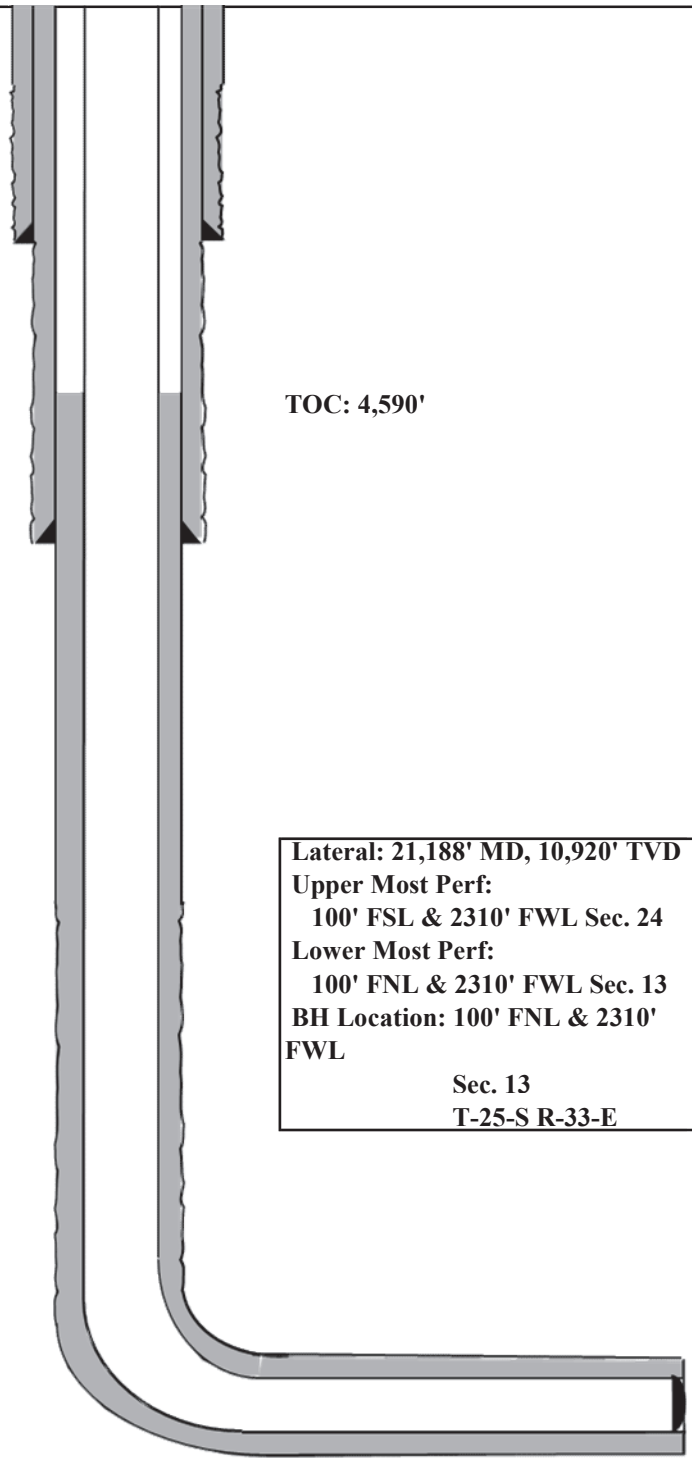

Bit Size: 13-1/2"
10-3/4", 40.5#, J-55, STC
@ 0' - 1,130'

Bit Size: 9-7/8"
8-5/8", 32.#, J-55, BTC-SC
@ 0' - 4,000'
8-5/8", 32.#, P110-EC, BTC-SC
@ 4,000' - 5,090'

TOC: 4,590'

Bit Size: 6-3/4"
5-1/2", 17.#, HCP-110, LTC
@ 0' - 21,188'

Lateral: 21,188' MD, 10,920' TVD
Upper Most Perf:
100' FSL & 2310' FWL Sec. 24
Lower Most Perf:
100' FNL & 2310' FWL Sec. 13
BH Location: 100' FNL & 2310' FWL
Sec. 13
T-25-S R-33-E

KOP: 10,503' MD, 10,442' TVD
EOC: 11,253' MD, 10,920' TVD

eog resources

Vaca 24 Fed Com #504H

Hydrogen Sulfide Plan Summary

A. All personnel shall receive proper H2S training in accordance with Onshore Order III.C.3.a.

B. Briefing Area: two perpendicular areas will be designated by signs and readily accessible.

C. Required Emergency Equipment:

- **Well control equipment**
  a. Flare line 150' from wellhead to be ignited by flare gun.
  b. Choke manifold with a remotely operated choke.
  c. Mud/gas separator
- **Protective equipment for essential personnel:**
  a. Breathing Apparatus:
     i. Rescue Packs (SCBA) — 1 unit shall be placed at each breathing area, 2 shall be stored in the safety trailer.
     ii. Work/Escape packs —4 packs shall be stored on the rig floor with sufficient air hose not to restrict work activity.
     iii. Emergency Escape Packs —4 packs shall be stored in the doghouse for emergency evacuation.
  b. Auxiliary Rescue Equipment:
     i. Stretcher
     ii. Two OSHA full body harness
     iii. 100 ft 5/8 inch OSHA approved rope
     iv. 1-20# class ABC fire extinguisher

- **H2S Detection and Monitoring Equipment:**
  The stationary detector with three sensors will be placed in the upper dog house if equipped, set to visually alarm @ 10 ppm and audible @ 14 ppm. Calibrate a minimum of every 30 days or as needed. The sensors will be placed in the following places: Rig floor / Bell nipple / End of flow line or where well bore fluid is being discharged. (Gas sample tubes will be stored in the safety trailer)

- **Visual Warning System:**
  a. One color code condition sign will be placed at the entrance to the site reflecting the possible conditions at the site.
  b. A colored condition flag will be on display, reflecting the current condition at the site at the time.
  c. Two wind socks will be placed in strategic locations, visible from all angles.

Vaca 24 Fed Com #504H

- **Mud Program:**
  The mud program has been designed to minimize the volume of H2S circulated to surface. The operator will have the necessary mud products to minimize hazards while drilling in H2S bearing zones.

- **Metallurgy:**
  All drill strings, casings, tubing, wellhead, blowout preventer, drilling spool, kill lines, choke manifold and lines, and valves shall be suitable for H2S service.

- **Communication:**
  Communication will be via cell phones and land lines where available.

eog resources

Vaca 24 Fed Com #504H

Emergency Assistance Telephone List

PUBLIC SAFETY:	911 or
Lea County Sheriff's Department	(575) 396-3611
Corey Helton	
Fire Department	
Carlsbad	(575) 885-3125
Artesia	(575) 746-5050
Hospitals	
Carlsbad	(575) 887-4121
Artesia	(575) 748-3333
Hobbs	(575) 392-1979
Dept. of Public Safety/Carlsbad	(575) 748-9718
Highway Department	(575) 885-3281
U.S. Department of Labor	(575) 887-1174
Bureau of Land Management - Hobbs (Lea Co)	(575) 393-3612
PET On Call - Hobbs	(575) 706-2779
Bureau of Land Management - Carlsbad (Eddy Co)	(575) 234-5972
PET On Call - Carlsbad	(575) 706-2779
New Mexico Oil Conservation Division - Artesia	(575) 748-1283
Inspection Group South - Gilbert Gordero	(575) 626-0830
EOG Resources, Inc.	
EOG Midland	(432) 686-3600
Company Drilling Consultants:	
Jett Dueitt	(432) 230-4840
Blake Burney	
Drilling Engineers	
Stephen Davis	(432) 235-9789
Matt Day	(210) 296-4456
Drilling Managers	
Branden Keener	(210) 294-3729
Drilling Superintendents	
Lance Hardy	(432) 215-8152
Ryan Reynolds	(432) 215-5978
Steve Kelly	(210) 416-7894
H&P Drilling	
H&P Drilling	(432) 563-5757
Nabors Drilling	
Nabors Drilling	(432) 363-8180
Patterson UTI	
Patterson UTI	(432) 561-9382
EOG Safety	
Brian Chandler (HSE Manager)	(817) 239-0251

Exhibit 4

Well Site Diagram

EOG Resources
Vaca 24 Fed Com #504H

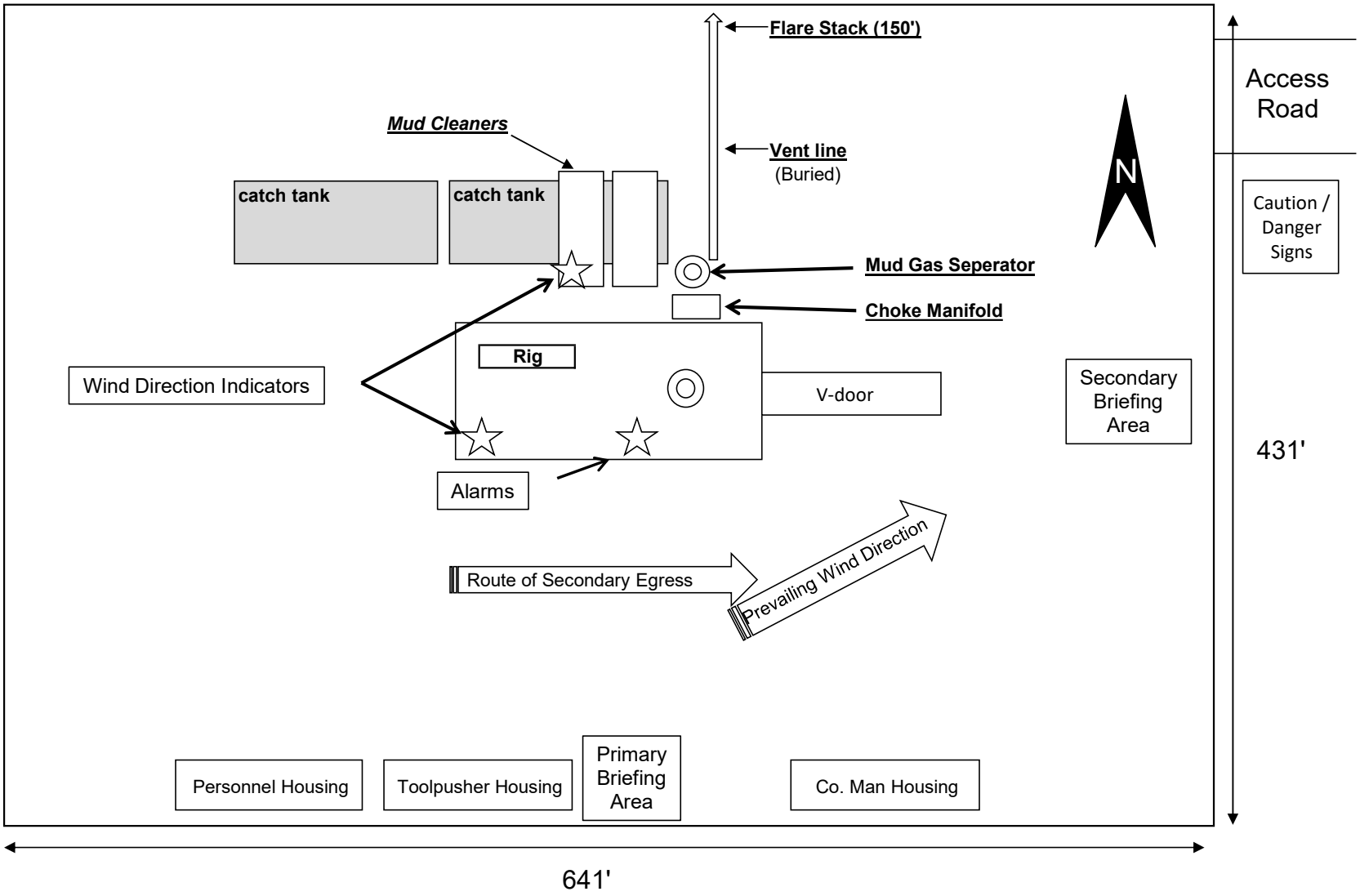

Received by OCD: 12/12/2024 8:01:57 AM

eog resources

Lea County, NM (NAD 83 NME)

Vaca 24 Fed Com #504H

Plan #0.1 RT

Azimuths to Grid North
True North: -0.43°
Magnetic North: 5.88°

Magnetic Field
Strength: 47246.2nT
Dip Angle: 59.74°
Date: 3/28/2023
Model: IGRF2020

To convert a Magnetic Direction to a Grid Direction, Add 5.88°
To convert a Magnetic Direction to a True Direction, Add 6.31° East
To convert a True Direction to a Grid Direction, Subtract 0.43°

PROJECT DETAILS: Lea County, NM (NAD 83 NME)

Geodetic System: US State Plane 1983
Datum: North American Datum 1983
Ellipsoid: GRS 1980
Zone: New Mexico Eastern Zone
System Datum: Mean Sea Level

WELL DETAILS: #504H

3331.0
kb = 26' @ 3357.0usft

Northing	Easting	Latitude	Longitude
404920.00	791538.00	32° 6' 38.254 N	103° 31' 30.878 W

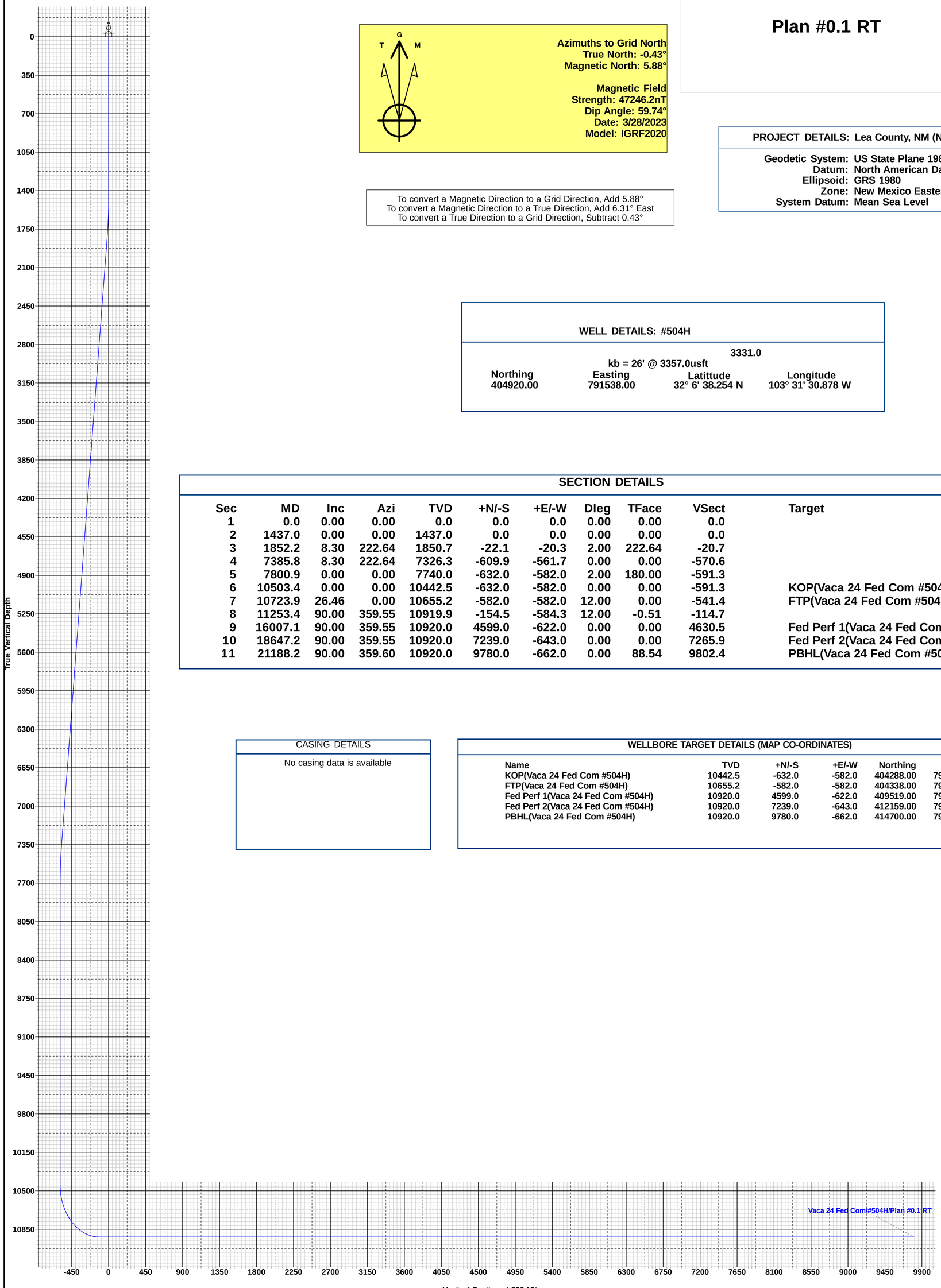

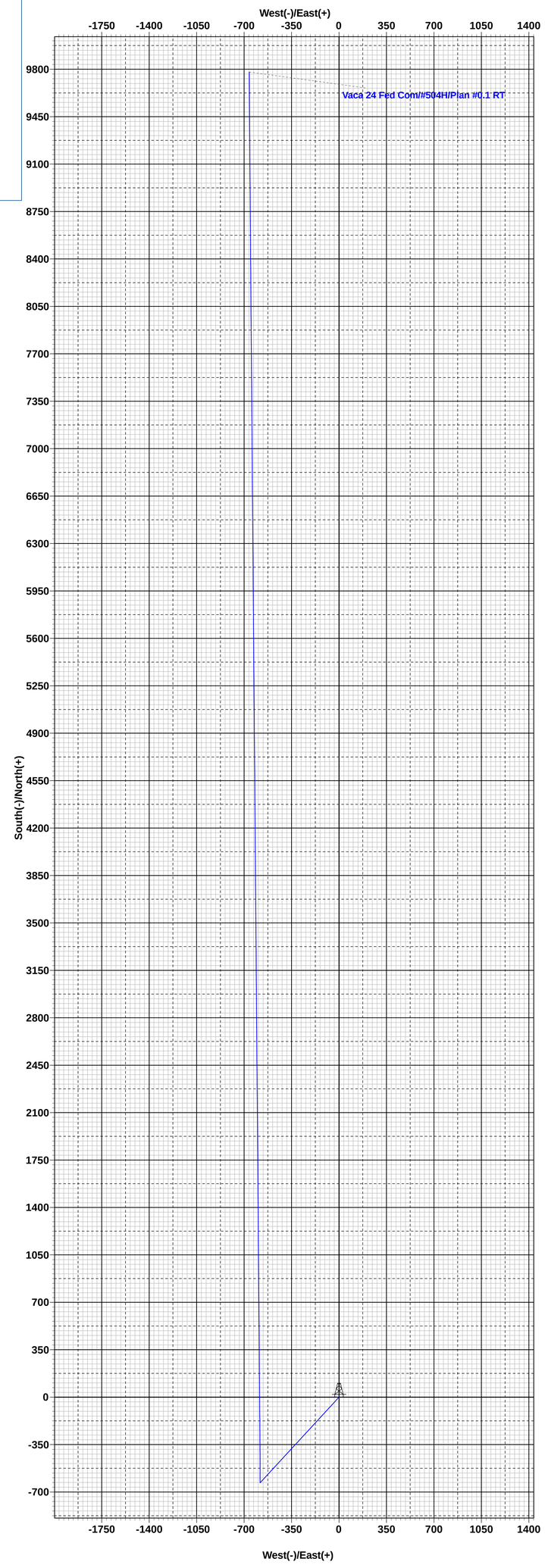

SECTION DETAILS

Sec	MD	Inc	Azi	TVD	+N/-S	+E/-W	Dleg	TFace	VSect	Target
1	0.0	0.00	0.00	0.0	0.0	0.0	0.00	0.00	0.0	
2	1437.0	0.00	0.00	1437.0	0.0	0.0	0.00	0.00	0.0	
3	1852.2	8.30	222.64	1850.7	-22.1	-20.3	2.00	222.64	-20.7	
4	7385.8	8.30	222.64	7326.3	-609.9	-561.7	0.00	0.00	-570.6	
5	7800.9	0.00	0.00	7740.0	-632.0	-582.0	2.00	180.00	-591.3	
6	10503.4	0.00	0.00	10442.5	-632.0	-582.0	0.00	0.00	-591.3	KOP(Vaca 24 Fed Com #504H)
7	10723.9	26.46	0.00	10655.2	-582.0	-582.0	12.00	0.00	-541.4	FTP(Vaca 24 Fed Com #504H)
8	11253.4	90.00	359.55	10919.9	-154.5	-584.3	12.00	-0.51	-114.7	
9	16007.1	90.00	359.55	10920.0	4599.0	-622.0	0.00	0.00	4630.5	Fed Perf 1(Vaca 24 Fed Com #504H)
10	18647.2	90.00	359.55	10920.0	7239.0	-643.0	0.00	0.00	7265.9	Fed Perf 2(Vaca 24 Fed Com #504H)
11	21188.2	90.00	359.60	10920.0	9780.0	-662.0	0.00	88.54	9802.4	PBHL(Vaca 24 Fed Com #504H)

CASING DETAILS

No casing data is available

WELLBORE TARGET DETAILS (MAP CO-ORDINATES)

Name	TVD	+N/-S	+E/-W	Northing	Easting
KOP(Vaca 24 Fed Com #504H)	10442.5	-632.0	-582.0	404288.00	790956.00
FTP(Vaca 24 Fed Com #504H)	10655.2	-582.0	-582.0	404338.00	790956.00
Fed Perf 1(Vaca 24 Fed Com #504H)	10920.0	4599.0	-622.0	409519.00	790916.00
Fed Perf 2(Vaca 24 Fed Com #504H)	10920.0	7239.0	-643.0	412159.00	790895.00
PBHL(Vaca 24 Fed Com #504H)	10920.0	9780.0	-662.0	414700.00	790876.00

Lea County, NM (NAD 83 NME)
Vaca 24 Fed Com
#504H
OH
Plan #0.1 RT
11:55, March 30 2023

Released to Imaging: 12/30/2024 11:40:54 AM

Midland

Lea County, NM (NAD 83 NME)
Vaca 24 Fed Com
#504H

OH

Plan: Plan #0.1 RT

Standard Planning Report

30 March, 2023

eog resources

Planning Report

Database:	PEDM	**Local Co-ordinate Reference:**	Well #504H
Company:	Midland	**TVD Reference:**	kb = 26' @ 3357.0usft
Project:	Lea County, NM (NAD 83 NME)	**MD Reference:**	kb = 26' @ 3357.0usft
Site:	Vaca 24 Fed Com	**North Reference:**	Grid
Well:	#504H	**Survey Calculation Method:**	Minimum Curvature
Wellbore:	OH		
Design:	Plan #0.1 RT		

Project Lea County, NM (NAD 83 NME)

Map System:	US State Plane 1983	**System Datum:**	Mean Sea Level
Geo Datum:	North American Datum 1983		
Map Zone:	New Mexico Eastern Zone		

Site Vaca 24 Fed Com

Site Position:		**Northing:**	404,270.00 usft	**Latitude:**	32° 6' 31.982 N
From:	Map	**Easting:**	789,366.00 usft	**Longitude:**	103° 31' 56.186 W
Position Uncertainty:	0.0 usft	**Slot Radius:**	13-3/16 "		

Well #504H

Well Position	**+N/-S**	0.0 usft	**Northing:**	404,920.00 usft	**Latitude:**	32° 6' 38.254 N
	+E/-W	0.0 usft	**Easting:**	791,538.00 usft	**Longitude:**	103° 31' 30.878 W
Position Uncertainty		0.0 usft	**Wellhead Elevation:**	usft	**Ground Level:**	3,331.0 usft
Grid Convergence:		0.43 °				

Wellbore OH

Magnetics	Model Name	Sample Date	Declination (°)	Dip Angle (°)	Field Strength (nT)
	IGRF2020	3/28/2023	6.31	59.74	47,246.20156718

Design Plan #0.1 RT

Audit Notes:

Version:		**Phase:**	PLAN	**Tie On Depth:**	0.0

Vertical Section:	Depth From (TVD) (usft)	+N/-S (usft)	+E/-W (usft)	Direction (°)
	0.0	0.0	0.0	356.13

Plan Survey Tool Program **Date** 3/30/2023

	Depth From (usft)	Depth To (usft)	Survey (Wellbore)	Tool Name	Remarks
1	0.0	21,188.2	Plan #0.1 RT (OH)	EOG MWD+IFR1 MWD + IFR1	

eog resources

Planning Report

Database:	PEDM	**Local Co-ordinate Reference:**	Well #504H
Company:	Midland	**TVD Reference:**	kb = 26' @ 3357.0usft
Project:	Lea County, NM (NAD 83 NME)	**MD Reference:**	kb = 26' @ 3357.0usft
Site:	Vaca 24 Fed Com	**North Reference:**	Grid
Well:	#504H	**Survey Calculation Method:**	Minimum Curvature
Wellbore:	OH		
Design:	Plan #0.1 RT		

Plan Sections

Measured Depth (usft)	Inclination (°)	Azimuth (°)	Vertical Depth (usft)	+N/-S (usft)	+E/-W (usft)	Dogleg Rate (°/100usft)	Build Rate (°/100usft)	Turn Rate (°/100usft)	TFO (°)	Target
0.0	0.00	0.00	0.0	0.0	0.0	0.00	0.00	0.00	0.00	
1,437.0	0.00	0.00	1,437.0	0.0	0.0	0.00	0.00	0.00	0.00	
1,852.2	8.30	222.64	1,850.7	-22.1	-20.3	2.00	2.00	0.00	222.64	
7,385.8	8.30	222.64	7,326.3	-609.9	-561.7	0.00	0.00	0.00	0.00	
7,800.9	0.00	0.00	7,740.0	-632.0	-582.0	2.00	-2.00	0.00	180.00	
10,503.4	0.00	0.00	10,442.5	-632.0	-582.0	0.00	0.00	0.00	0.00	KOP(Vaca 24 Fed Co
10,723.9	26.46	0.00	10,655.2	-582.0	-582.0	12.00	12.00	0.00	0.00	FTP(Vaca 24 Fed Cor
11,253.4	90.00	359.55	10,919.9	-154.5	-584.3	12.00	12.00	-0.09	-0.51	
16,007.1	90.00	359.55	10,920.0	4,599.0	-622.0	0.00	0.00	0.00	0.00	Fed Perf 1(Vaca 24 F
18,647.2	90.00	359.55	10,920.0	7,239.0	-643.0	0.00	0.00	0.00	0.00	Fed Perf 2(Vaca 24 F
21,188.2	90.00	359.60	10,920.0	9,780.0	-662.0	0.00	0.00	0.00	88.54	PBHL(Vaca 24 Fed C

eog resources

Planning Report

Database:	PEDM	**Local Co-ordinate Reference:**	Well #504H
Company:	Midland	**TVD Reference:**	kb = 26' @ 3357.0usft
Project:	Lea County, NM (NAD 83 NME)	**MD Reference:**	kb = 26' @ 3357.0usft
Site:	Vaca 24 Fed Com	**North Reference:**	Grid
Well:	#504H	**Survey Calculation Method:**	Minimum Curvature
Wellbore:	OH		
Design:	Plan #0.1 RT		

Planned Survey

Measured Depth (usft)	Inclination (°)	Azimuth (°)	Vertical Depth (usft)	+N/-S (usft)	+E/-W (usft)	Vertical Section (usft)	Dogleg Rate (°/100usft)	Build Rate (°/100usft)	Turn Rate (°/100usft)
0.0	0.00	0.00	0.0	0.0	0.0	0.0	0.00	0.00	0.00
100.0	0.00	0.00	100.0	0.0	0.0	0.0	0.00	0.00	0.00
200.0	0.00	0.00	200.0	0.0	0.0	0.0	0.00	0.00	0.00
300.0	0.00	0.00	300.0	0.0	0.0	0.0	0.00	0.00	0.00
400.0	0.00	0.00	400.0	0.0	0.0	0.0	0.00	0.00	0.00
500.0	0.00	0.00	500.0	0.0	0.0	0.0	0.00	0.00	0.00
600.0	0.00	0.00	600.0	0.0	0.0	0.0	0.00	0.00	0.00
700.0	0.00	0.00	700.0	0.0	0.0	0.0	0.00	0.00	0.00
800.0	0.00	0.00	800.0	0.0	0.0	0.0	0.00	0.00	0.00
900.0	0.00	0.00	900.0	0.0	0.0	0.0	0.00	0.00	0.00
1,000.0	0.00	0.00	1,000.0	0.0	0.0	0.0	0.00	0.00	0.00
1,100.0	0.00	0.00	1,100.0	0.0	0.0	0.0	0.00	0.00	0.00
1,200.0	0.00	0.00	1,200.0	0.0	0.0	0.0	0.00	0.00	0.00
1,300.0	0.00	0.00	1,300.0	0.0	0.0	0.0	0.00	0.00	0.00
1,400.0	0.00	0.00	1,400.0	0.0	0.0	0.0	0.00	0.00	0.00
1,437.0	0.00	0.00	1,437.0	0.0	0.0	0.0	0.00	0.00	0.00
1,500.0	1.26	222.64	1,500.0	-0.5	-0.5	-0.5	2.00	2.00	0.00
1,600.0	3.26	222.64	1,599.9	-3.4	-3.1	-3.2	2.00	2.00	0.00
1,700.0	5.26	222.64	1,699.6	-8.9	-8.2	-8.3	2.00	2.00	0.00
1,800.0	7.26	222.64	1,799.0	-16.9	-15.6	-15.8	2.00	2.00	0.00
1,852.2	8.30	222.64	1,850.7	-22.1	-20.3	-20.7	2.00	2.00	0.00
1,900.0	8.30	222.64	1,898.0	-27.2	-25.0	-25.4	0.00	0.00	0.00
2,000.0	8.30	222.64	1,997.0	-37.8	-34.8	-35.4	0.00	0.00	0.00
2,100.0	8.30	222.64	2,096.0	-48.4	-44.6	-45.3	0.00	0.00	0.00
2,200.0	8.30	222.64	2,194.9	-59.0	-54.4	-55.2	0.00	0.00	0.00
2,300.0	8.30	222.64	2,293.9	-69.7	-64.2	-65.2	0.00	0.00	0.00
2,400.0	8.30	222.64	2,392.8	-80.3	-73.9	-75.1	0.00	0.00	0.00
2,500.0	8.30	222.64	2,491.8	-90.9	-83.7	-85.0	0.00	0.00	0.00
2,600.0	8.30	222.64	2,590.7	-101.5	-93.5	-95.0	0.00	0.00	0.00
2,700.0	8.30	222.64	2,689.7	-112.2	-103.3	-104.9	0.00	0.00	0.00
2,800.0	8.30	222.64	2,788.6	-122.8	-113.1	-114.9	0.00	0.00	0.00
2,900.0	8.30	222.64	2,887.6	-133.4	-122.8	-124.8	0.00	0.00	0.00
3,000.0	8.30	222.64	2,986.5	-144.0	-132.6	-134.7	0.00	0.00	0.00
3,100.0	8.30	222.64	3,085.5	-154.6	-142.4	-144.7	0.00	0.00	0.00
3,200.0	8.30	222.64	3,184.4	-165.3	-152.2	-154.6	0.00	0.00	0.00
3,300.0	8.30	222.64	3,283.4	-175.9	-162.0	-164.6	0.00	0.00	0.00
3,400.0	8.30	222.64	3,382.3	-186.5	-171.8	-174.5	0.00	0.00	0.00
3,500.0	8.30	222.64	3,481.3	-197.1	-181.5	-184.4	0.00	0.00	0.00
3,600.0	8.30	222.64	3,580.2	-207.8	-191.3	-194.4	0.00	0.00	0.00
3,700.0	8.30	222.64	3,679.2	-218.4	-201.1	-204.3	0.00	0.00	0.00
3,800.0	8.30	222.64	3,778.1	-229.0	-210.9	-214.2	0.00	0.00	0.00
3,900.0	8.30	222.64	3,877.1	-239.6	-220.7	-224.2	0.00	0.00	0.00
4,000.0	8.30	222.64	3,976.0	-250.3	-230.5	-234.1	0.00	0.00	0.00
4,100.0	8.30	222.64	4,075.0	-260.9	-240.2	-244.1	0.00	0.00	0.00
4,200.0	8.30	222.64	4,173.9	-271.5	-250.0	-254.0	0.00	0.00	0.00
4,300.0	8.30	222.64	4,272.9	-282.1	-259.8	-263.9	0.00	0.00	0.00
4,400.0	8.30	222.64	4,371.8	-292.7	-269.6	-273.9	0.00	0.00	0.00
4,500.0	8.30	222.64	4,470.8	-303.4	-279.4	-283.8	0.00	0.00	0.00
4,600.0	8.30	222.64	4,569.7	-314.0	-289.1	-293.7	0.00	0.00	0.00
4,700.0	8.30	222.64	4,668.7	-324.6	-298.9	-303.7	0.00	0.00	0.00
4,800.0	8.30	222.64	4,767.6	-335.2	-308.7	-313.6	0.00	0.00	0.00
4,900.0	8.30	222.64	4,866.6	-345.9	-318.5	-323.6	0.00	0.00	0.00
5,000.0	8.30	222.64	4,965.6	-356.5	-328.3	-333.5	0.00	0.00	0.00
5,100.0	8.30	222.64	5,064.5	-367.1	-338.1	-343.4	0.00	0.00	0.00

eog resources

Planning Report

Database:	PEDM	**Local Co-ordinate Reference:**	Well #504H
Company:	Midland	**TVD Reference:**	kb = 26' @ 3357.0usft
Project:	Lea County, NM (NAD 83 NME)	**MD Reference:**	kb = 26' @ 3357.0usft
Site:	Vaca 24 Fed Com	**North Reference:**	Grid
Well:	#504H	**Survey Calculation Method:**	Minimum Curvature
Wellbore:	OH		
Design:	Plan #0.1 RT		

Planned Survey

Measured Depth (usft)	Inclination (°)	Azimuth (°)	Vertical Depth (usft)	+N/-S (usft)	+E/-W (usft)	Vertical Section (usft)	Dogleg Rate (°/100usft)	Build Rate (°/100usft)	Turn Rate (°/100usft)
5,200.0	8.30	222.64	5,163.5	-377.7	-347.8	-353.4	0.00	0.00	0.00
5,300.0	8.30	222.64	5,262.4	-388.3	-357.6	-363.3	0.00	0.00	0.00
5,400.0	8.30	222.64	5,361.4	-399.0	-367.4	-373.2	0.00	0.00	0.00
5,500.0	8.30	222.64	5,460.3	-409.6	-377.2	-383.2	0.00	0.00	0.00
5,600.0	8.30	222.64	5,559.3	-420.2	-387.0	-393.1	0.00	0.00	0.00
5,700.0	8.30	222.64	5,658.2	-430.8	-396.8	-403.1	0.00	0.00	0.00
5,800.0	8.30	222.64	5,757.2	-441.5	-406.5	-413.0	0.00	0.00	0.00
5,900.0	8.30	222.64	5,856.1	-452.1	-416.3	-422.9	0.00	0.00	0.00
6,000.0	8.30	222.64	5,955.1	-462.7	-426.1	-432.9	0.00	0.00	0.00
6,100.0	8.30	222.64	6,054.0	-473.3	-435.9	-442.8	0.00	0.00	0.00
6,200.0	8.30	222.64	6,153.0	-484.0	-445.7	-452.7	0.00	0.00	0.00
6,300.0	8.30	222.64	6,251.9	-494.6	-455.4	-462.7	0.00	0.00	0.00
6,400.0	8.30	222.64	6,350.9	-505.2	-465.2	-472.6	0.00	0.00	0.00
6,500.0	8.30	222.64	6,449.8	-515.8	-475.0	-482.6	0.00	0.00	0.00
6,600.0	8.30	222.64	6,548.8	-526.4	-484.8	-492.5	0.00	0.00	0.00
6,700.0	8.30	222.64	6,647.7	-537.1	-494.6	-502.4	0.00	0.00	0.00
6,800.0	8.30	222.64	6,746.7	-547.7	-504.4	-512.4	0.00	0.00	0.00
6,900.0	8.30	222.64	6,845.6	-558.3	-514.1	-522.3	0.00	0.00	0.00
7,000.0	8.30	222.64	6,944.6	-568.9	-523.9	-532.3	0.00	0.00	0.00
7,100.0	8.30	222.64	7,043.5	-579.6	-533.7	-542.2	0.00	0.00	0.00
7,200.0	8.30	222.64	7,142.5	-590.2	-543.5	-552.1	0.00	0.00	0.00
7,300.0	8.30	222.64	7,241.4	-600.8	-553.3	-562.1	0.00	0.00	0.00
7,385.8	8.30	222.64	7,326.3	-609.9	-561.7	-570.6	0.00	0.00	0.00
7,400.0	8.02	222.64	7,340.4	-611.4	-563.0	-572.0	2.00	-2.00	0.00
7,500.0	6.02	222.64	7,439.6	-620.4	-571.3	-580.4	2.00	-2.00	0.00
7,600.0	4.02	222.64	7,539.3	-626.8	-577.2	-586.4	2.00	-2.00	0.00
7,700.0	2.02	222.64	7,639.1	-630.7	-580.8	-590.0	2.00	-2.00	0.00
7,800.9	0.00	0.00	7,740.0	-632.0	-582.0	-591.3	2.00	-2.00	0.00
7,900.0	0.00	0.00	7,839.1	-632.0	-582.0	-591.3	0.00	0.00	0.00
8,000.0	0.00	0.00	7,939.1	-632.0	-582.0	-591.3	0.00	0.00	0.00
8,100.0	0.00	0.00	8,039.1	-632.0	-582.0	-591.3	0.00	0.00	0.00
8,200.0	0.00	0.00	8,139.1	-632.0	-582.0	-591.3	0.00	0.00	0.00
8,300.0	0.00	0.00	8,239.1	-632.0	-582.0	-591.3	0.00	0.00	0.00
8,400.0	0.00	0.00	8,339.1	-632.0	-582.0	-591.3	0.00	0.00	0.00
8,500.0	0.00	0.00	8,439.1	-632.0	-582.0	-591.3	0.00	0.00	0.00
8,600.0	0.00	0.00	8,539.1	-632.0	-582.0	-591.3	0.00	0.00	0.00
8,700.0	0.00	0.00	8,639.1	-632.0	-582.0	-591.3	0.00	0.00	0.00
8,800.0	0.00	0.00	8,739.1	-632.0	-582.0	-591.3	0.00	0.00	0.00
8,900.0	0.00	0.00	8,839.1	-632.0	-582.0	-591.3	0.00	0.00	0.00
9,000.0	0.00	0.00	8,939.1	-632.0	-582.0	-591.3	0.00	0.00	0.00
9,100.0	0.00	0.00	9,039.1	-632.0	-582.0	-591.3	0.00	0.00	0.00
9,200.0	0.00	0.00	9,139.1	-632.0	-582.0	-591.3	0.00	0.00	0.00
9,300.0	0.00	0.00	9,239.1	-632.0	-582.0	-591.3	0.00	0.00	0.00
9,400.0	0.00	0.00	9,339.1	-632.0	-582.0	-591.3	0.00	0.00	0.00
9,500.0	0.00	0.00	9,439.1	-632.0	-582.0	-591.3	0.00	0.00	0.00
9,600.0	0.00	0.00	9,539.1	-632.0	-582.0	-591.3	0.00	0.00	0.00
9,700.0	0.00	0.00	9,639.1	-632.0	-582.0	-591.3	0.00	0.00	0.00
9,800.0	0.00	0.00	9,739.1	-632.0	-582.0	-591.3	0.00	0.00	0.00
9,900.0	0.00	0.00	9,839.1	-632.0	-582.0	-591.3	0.00	0.00	0.00
10,000.0	0.00	0.00	9,939.1	-632.0	-582.0	-591.3	0.00	0.00	0.00
10,100.0	0.00	0.00	10,039.1	-632.0	-582.0	-591.3	0.00	0.00	0.00
10,200.0	0.00	0.00	10,139.1	-632.0	-582.0	-591.3	0.00	0.00	0.00
10,300.0	0.00	0.00	10,239.1	-632.0	-582.0	-591.3	0.00	0.00	0.00
10,400.0	0.00	0.00	10,339.1	-632.0	-582.0	-591.3	0.00	0.00	0.00

eog resources

Planning Report

Database:	PEDM	**Local Co-ordinate Reference:**	Well #504H
Company:	Midland	**TVD Reference:**	kb = 26' @ 3357.0usft
Project:	Lea County, NM (NAD 83 NME)	**MD Reference:**	kb = 26' @ 3357.0usft
Site:	Vaca 24 Fed Com	**North Reference:**	Grid
Well:	#504H	**Survey Calculation Method:**	Minimum Curvature
Wellbore:	OH		
Design:	Plan #0.1 RT		

Planned Survey

Measured Depth (usft)	Inclination (°)	Azimuth (°)	Vertical Depth (usft)	+N/-S (usft)	+E/-W (usft)	Vertical Section (usft)	Dogleg Rate (°/100usft)	Build Rate (°/100usft)	Turn Rate (°/100usft)
10,503.4	0.00	0.00	10,442.5	-632.0	-582.0	-591.3	0.00	0.00	0.00
10,525.0	2.59	0.00	10,464.1	-631.5	-582.0	-590.8	12.00	12.00	0.00
10,550.0	5.59	0.00	10,489.0	-629.7	-582.0	-589.0	12.00	12.00	0.00
10,575.0	8.59	0.00	10,513.8	-626.6	-582.0	-585.9	12.00	12.00	0.00
10,600.0	11.59	0.00	10,538.4	-622.3	-582.0	-581.5	12.00	12.00	0.00
10,625.0	14.59	0.00	10,562.8	-616.6	-582.0	-575.9	12.00	12.00	0.00
10,650.0	17.59	0.00	10,586.8	-609.7	-582.0	-569.0	12.00	12.00	0.00
10,675.0	20.59	0.00	10,610.4	-601.5	-582.0	-560.8	12.00	12.00	0.00
10,700.0	23.59	0.00	10,633.6	-592.1	-582.0	-551.4	12.00	12.00	0.00
10,723.9	26.46	0.00	10,655.2	-582.0	-582.0	-541.4	12.00	12.00	0.00
10,725.0	26.59	360.00	10,656.2	-581.5	-582.0	-540.9	12.00	12.00	-0.24
10,750.0	29.59	359.94	10,678.3	-569.7	-582.0	-529.1	12.00	12.00	-0.21
10,775.0	32.59	359.90	10,699.7	-556.8	-582.0	-516.2	12.00	12.00	-0.18
10,800.0	35.59	359.86	10,720.4	-542.8	-582.1	-502.2	12.00	12.00	-0.15
10,825.0	38.59	359.83	10,740.3	-527.7	-582.1	-487.2	12.00	12.00	-0.13
10,850.0	41.59	359.80	10,759.4	-511.6	-582.1	-471.1	12.00	12.00	-0.11
10,875.0	44.59	359.78	10,777.7	-494.5	-582.2	-454.1	12.00	12.00	-0.10
10,900.0	47.59	359.75	10,795.0	-476.5	-582.3	-436.1	12.00	12.00	-0.09
10,925.0	50.59	359.73	10,811.4	-457.6	-582.4	-417.3	12.00	12.00	-0.08
10,950.0	53.59	359.71	10,826.8	-437.9	-582.5	-397.6	12.00	12.00	-0.08
10,975.0	56.59	359.70	10,841.1	-417.4	-582.6	-377.1	12.00	12.00	-0.07
11,000.0	59.59	359.68	10,854.3	-396.2	-582.7	-355.9	12.00	12.00	-0.07
11,025.0	62.59	359.66	10,866.4	-374.3	-582.8	-334.1	12.00	12.00	-0.06
11,050.0	65.59	359.65	10,877.3	-351.8	-582.9	-311.7	12.00	12.00	-0.06
11,075.0	68.59	359.63	10,887.0	-328.8	-583.1	-288.7	12.00	12.00	-0.06
11,100.0	71.59	359.62	10,895.5	-305.3	-583.2	-265.2	12.00	12.00	-0.05
11,125.0	74.59	359.61	10,902.8	-281.4	-583.4	-241.3	12.00	12.00	-0.05
11,150.0	77.59	359.60	10,908.8	-257.1	-583.6	-217.1	12.00	12.00	-0.05
11,175.0	80.59	359.58	10,913.5	-232.6	-583.7	-192.6	12.00	12.00	-0.05
11,200.0	83.59	359.57	10,917.0	-207.8	-583.9	-167.9	12.00	12.00	-0.05
11,225.0	86.59	359.56	10,919.1	-182.9	-584.1	-143.0	12.00	12.00	-0.05
11,250.0	89.59	359.55	10,919.9	-157.9	-584.3	-118.1	12.00	12.00	-0.05
11,253.4	90.00	359.55	10,919.9	-154.5	-584.3	-114.7	12.00	12.00	-0.05
11,300.0	90.00	359.55	10,919.9	-107.9	-584.7	-68.2	0.00	0.00	0.00
11,400.0	90.00	359.55	10,919.9	-7.9	-585.5	31.6	0.00	0.00	0.00
11,500.0	90.00	359.55	10,919.9	92.1	-586.3	131.4	0.00	0.00	0.00
11,600.0	90.00	359.55	10,920.0	192.1	-587.1	231.3	0.00	0.00	0.00
11,700.0	90.00	359.55	10,920.0	292.1	-587.9	331.1	0.00	0.00	0.00
11,800.0	90.00	359.55	10,920.0	392.1	-588.7	430.9	0.00	0.00	0.00
11,900.0	90.00	359.55	10,920.0	492.0	-589.5	530.7	0.00	0.00	0.00
12,000.0	90.00	359.55	10,920.0	592.0	-590.3	630.6	0.00	0.00	0.00
12,100.0	90.00	359.55	10,920.0	692.0	-591.0	730.4	0.00	0.00	0.00
12,200.0	90.00	359.55	10,920.0	792.0	-591.8	830.2	0.00	0.00	0.00
12,300.0	90.00	359.55	10,920.0	892.0	-592.6	930.0	0.00	0.00	0.00
12,400.0	90.00	359.55	10,920.0	992.0	-593.4	1,029.8	0.00	0.00	0.00
12,500.0	90.00	359.55	10,920.0	1,092.0	-594.2	1,129.7	0.00	0.00	0.00
12,600.0	90.00	359.55	10,920.0	1,192.0	-595.0	1,229.5	0.00	0.00	0.00
12,700.0	90.00	359.55	10,920.0	1,292.0	-595.8	1,329.3	0.00	0.00	0.00
12,800.0	90.00	359.55	10,920.0	1,392.0	-596.6	1,429.1	0.00	0.00	0.00
12,900.0	90.00	359.55	10,920.0	1,492.0	-597.4	1,529.0	0.00	0.00	0.00
13,000.0	90.00	359.55	10,920.0	1,592.0	-598.2	1,628.8	0.00	0.00	0.00
13,100.0	90.00	359.55	10,920.0	1,692.0	-599.0	1,728.6	0.00	0.00	0.00
13,200.0	90.00	359.55	10,920.0	1,792.0	-599.8	1,828.4	0.00	0.00	0.00
13,300.0	90.00	359.55	10,920.0	1,892.0	-600.6	1,928.2	0.00	0.00	0.00

eog resources

Planning Report

Database:	PEDM	**Local Co-ordinate Reference:**	Well #504H
Company:	Midland	**TVD Reference:**	kb = 26' @ 3357.0usft
Project:	Lea County, NM (NAD 83 NME)	**MD Reference:**	kb = 26' @ 3357.0usft
Site:	Vaca 24 Fed Com	**North Reference:**	Grid
Well:	#504H	**Survey Calculation Method:**	Minimum Curvature
Wellbore:	OH		
Design:	Plan #0.1 RT		

Planned Survey

Measured Depth (usft)	Inclination (°)	Azimuth (°)	Vertical Depth (usft)	+N/-S (usft)	+E/-W (usft)	Vertical Section (usft)	Dogleg Rate (°/100usft)	Build Rate (°/100usft)	Turn Rate (°/100usft)
13,400.0	90.00	359.55	10,920.0	1,992.0	-601.3	2,028.1	0.00	0.00	0.00
13,500.0	90.00	359.55	10,920.0	2,092.0	-602.1	2,127.9	0.00	0.00	0.00
13,600.0	90.00	359.55	10,920.0	2,192.0	-602.9	2,227.7	0.00	0.00	0.00
13,700.0	90.00	359.55	10,920.0	2,292.0	-603.7	2,327.5	0.00	0.00	0.00
13,800.0	90.00	359.55	10,920.0	2,392.0	-604.5	2,427.4	0.00	0.00	0.00
13,900.0	90.00	359.55	10,920.0	2,492.0	-605.3	2,527.2	0.00	0.00	0.00
14,000.0	90.00	359.55	10,920.0	2,592.0	-606.1	2,627.0	0.00	0.00	0.00
14,100.0	90.00	359.55	10,920.0	2,692.0	-606.9	2,726.8	0.00	0.00	0.00
14,200.0	90.00	359.55	10,920.0	2,792.0	-607.7	2,826.6	0.00	0.00	0.00
14,300.0	90.00	359.55	10,920.0	2,892.0	-608.5	2,926.5	0.00	0.00	0.00
14,400.0	90.00	359.55	10,920.0	2,992.0	-609.3	3,026.3	0.00	0.00	0.00
14,500.0	90.00	359.55	10,920.0	3,092.0	-610.1	3,126.1	0.00	0.00	0.00
14,600.0	90.00	359.55	10,920.0	3,192.0	-610.9	3,225.9	0.00	0.00	0.00
14,700.0	90.00	359.55	10,920.0	3,292.0	-611.6	3,325.8	0.00	0.00	0.00
14,800.0	90.00	359.55	10,920.0	3,392.0	-612.4	3,425.6	0.00	0.00	0.00
14,900.0	90.00	359.55	10,920.0	3,492.0	-613.2	3,525.4	0.00	0.00	0.00
15,000.0	90.00	359.55	10,920.0	3,592.0	-614.0	3,625.2	0.00	0.00	0.00
15,100.0	90.00	359.55	10,920.0	3,691.9	-614.8	3,725.0	0.00	0.00	0.00
15,200.0	90.00	359.55	10,920.0	3,791.9	-615.6	3,824.9	0.00	0.00	0.00
15,300.0	90.00	359.55	10,920.0	3,891.9	-616.4	3,924.7	0.00	0.00	0.00
15,400.0	90.00	359.55	10,920.0	3,991.9	-617.2	4,024.5	0.00	0.00	0.00
15,500.0	90.00	359.55	10,920.0	4,091.9	-618.0	4,124.3	0.00	0.00	0.00
15,600.0	90.00	359.55	10,920.0	4,191.9	-618.8	4,224.2	0.00	0.00	0.00
15,700.0	90.00	359.55	10,920.0	4,291.9	-619.6	4,324.0	0.00	0.00	0.00
15,800.0	90.00	359.55	10,920.0	4,391.9	-620.4	4,423.8	0.00	0.00	0.00
15,900.0	90.00	359.55	10,920.0	4,491.9	-621.2	4,523.6	0.00	0.00	0.00
16,007.1	90.00	359.55	10,920.0	4,599.0	-622.0	4,630.5	0.00	0.00	0.00
16,100.0	90.00	359.55	10,920.0	4,691.9	-622.7	4,723.3	0.00	0.00	0.00
16,200.0	90.00	359.55	10,920.0	4,791.9	-623.5	4,823.1	0.00	0.00	0.00
16,300.0	90.00	359.55	10,920.0	4,891.9	-624.3	4,922.9	0.00	0.00	0.00
16,400.0	90.00	359.55	10,920.0	4,991.9	-625.1	5,022.7	0.00	0.00	0.00
16,500.0	90.00	359.55	10,920.0	5,091.9	-625.9	5,122.5	0.00	0.00	0.00
16,600.0	90.00	359.55	10,920.0	5,191.9	-626.7	5,222.4	0.00	0.00	0.00
16,700.0	90.00	359.55	10,920.0	5,291.9	-627.5	5,322.2	0.00	0.00	0.00
16,800.0	90.00	359.55	10,920.0	5,391.9	-628.3	5,422.0	0.00	0.00	0.00
16,900.0	90.00	359.55	10,920.0	5,491.9	-629.1	5,521.8	0.00	0.00	0.00
17,000.0	90.00	359.55	10,920.0	5,591.9	-629.9	5,621.7	0.00	0.00	0.00
17,100.0	90.00	359.55	10,920.0	5,691.9	-630.7	5,721.5	0.00	0.00	0.00
17,200.0	90.00	359.55	10,920.0	5,791.9	-631.4	5,821.3	0.00	0.00	0.00
17,300.0	90.00	359.55	10,920.0	5,891.9	-632.2	5,921.1	0.00	0.00	0.00
17,400.0	90.00	359.55	10,920.0	5,991.9	-633.0	6,020.9	0.00	0.00	0.00
17,500.0	90.00	359.55	10,920.0	6,091.9	-633.8	6,120.8	0.00	0.00	0.00
17,600.0	90.00	359.55	10,920.0	6,191.9	-634.6	6,220.6	0.00	0.00	0.00
17,700.0	90.00	359.55	10,920.0	6,291.9	-635.4	6,320.4	0.00	0.00	0.00
17,800.0	90.00	359.55	10,920.0	6,391.9	-636.2	6,420.2	0.00	0.00	0.00
17,900.0	90.00	359.55	10,920.0	6,491.9	-637.0	6,520.1	0.00	0.00	0.00
18,000.0	90.00	359.55	10,920.0	6,591.9	-637.8	6,619.9	0.00	0.00	0.00
18,100.0	90.00	359.55	10,920.0	6,691.9	-638.6	6,719.7	0.00	0.00	0.00
18,200.0	90.00	359.55	10,920.0	6,791.9	-639.4	6,819.5	0.00	0.00	0.00
18,300.0	90.00	359.55	10,920.0	6,891.8	-640.2	6,919.3	0.00	0.00	0.00
18,400.0	90.00	359.55	10,920.0	6,991.8	-641.0	7,019.2	0.00	0.00	0.00
18,500.0	90.00	359.55	10,920.0	7,091.8	-641.7	7,119.0	0.00	0.00	0.00
18,600.0	90.00	359.55	10,920.0	7,191.8	-642.5	7,218.8	0.00	0.00	0.00
18,647.2	90.00	359.55	10,920.0	7,239.0	-643.0	7,265.9	0.00	0.00	0.00

eog resources

Planning Report

Database:	PEDM	**Local Co-ordinate Reference:**	Well #504H
Company:	Midland	**TVD Reference:**	kb = 26' @ 3357.0usft
Project:	Lea County, NM (NAD 83 NME)	**MD Reference:**	kb = 26' @ 3357.0usft
Site:	Vaca 24 Fed Com	**North Reference:**	Grid
Well:	#504H	**Survey Calculation Method:**	Minimum Curvature
Wellbore:	OH		
Design:	Plan #0.1 RT		

Planned Survey

Measured Depth (usft)	Inclination (°)	Azimuth (°)	Vertical Depth (usft)	+N/-S (usft)	+E/-W (usft)	Vertical Section (usft)	Dogleg Rate (°/100usft)	Build Rate (°/100usft)	Turn Rate (°/100usft)
18,700.0	90.00	359.55	10,920.0	7,291.8	-643.4	7,318.6	0.00	0.00	0.00
18,800.0	90.00	359.55	10,920.0	7,391.8	-644.2	7,418.5	0.00	0.00	0.00
18,900.0	90.00	359.55	10,920.0	7,491.8	-645.0	7,518.3	0.00	0.00	0.00
19,000.0	90.00	359.55	10,920.0	7,591.8	-645.8	7,618.1	0.00	0.00	0.00
19,100.0	90.00	359.56	10,920.0	7,691.8	-646.6	7,717.9	0.00	0.00	0.00
19,200.0	90.00	359.56	10,920.0	7,791.8	-647.3	7,817.7	0.00	0.00	0.00
19,300.0	90.00	359.56	10,920.0	7,891.8	-648.1	7,917.6	0.00	0.00	0.00
19,400.0	90.00	359.56	10,920.0	7,991.8	-648.9	8,017.4	0.00	0.00	0.00
19,500.0	90.00	359.56	10,920.0	8,091.8	-649.6	8,117.2	0.00	0.00	0.00
19,600.0	90.00	359.57	10,920.0	8,191.8	-650.4	8,217.0	0.00	0.00	0.00
19,700.0	90.00	359.57	10,920.0	8,291.8	-651.1	8,316.8	0.00	0.00	0.00
19,800.0	90.00	359.57	10,920.0	8,391.8	-651.9	8,416.7	0.00	0.00	0.00
19,900.0	90.00	359.57	10,920.0	8,491.8	-652.7	8,516.5	0.00	0.00	0.00
20,000.0	90.00	359.57	10,920.0	8,591.8	-653.4	8,616.3	0.00	0.00	0.00
20,100.0	90.00	359.58	10,920.0	8,691.8	-654.1	8,716.1	0.00	0.00	0.00
20,200.0	90.00	359.58	10,920.0	8,791.8	-654.9	8,815.9	0.00	0.00	0.00
20,300.0	90.00	359.58	10,920.0	8,891.8	-655.6	8,915.8	0.00	0.00	0.00
20,400.0	90.00	359.58	10,920.0	8,991.8	-656.3	9,015.6	0.00	0.00	0.00
20,500.0	90.00	359.58	10,920.0	9,091.8	-657.1	9,115.4	0.00	0.00	0.00
20,600.0	90.00	359.59	10,920.0	9,191.8	-657.8	9,215.2	0.00	0.00	0.00
20,700.0	90.00	359.59	10,920.0	9,291.8	-658.5	9,315.0	0.00	0.00	0.00
20,800.0	90.00	359.59	10,920.0	9,391.8	-659.2	9,414.9	0.00	0.00	0.00
20,900.0	90.00	359.59	10,920.0	9,491.8	-660.0	9,514.7	0.00	0.00	0.00
21,000.0	90.00	359.59	10,920.0	9,591.8	-660.7	9,614.5	0.00	0.00	0.00
21,100.0	90.00	359.60	10,920.0	9,691.8	-661.4	9,714.3	0.00	0.00	0.00
21,188.2	90.00	359.60	10,920.0	9,780.0	-662.0	9,802.4	0.00	0.00	0.00

Design Targets

Target Name - hit/miss target - Shape	Dip Angle (°)	Dip Dir. (°)	TVD (usft)	+N/-S (usft)	+E/-W (usft)	Northing (usft)	Easting (usft)	Latitude	Longitude
KOP(Vaca 24 Fed Com - plan hits target center - Point	0.00	0.00	10,442.5	-632.0	-582.0	404,288.00	790,956.00	32° 6' 32.043 N	103° 31' 37.699 W
FTP(Vaca 24 Fed Com # - plan hits target center - Point	0.00	0.00	10,655.2	-582.0	-582.0	404,338.00	790,956.00	32° 6' 32.538 N	103° 31' 37.695 W
Fed Perf 2(Vaca 24 Fed - plan hits target center - Point	0.00	0.00	10,920.0	7,239.0	-643.0	412,159.00	790,895.00	32° 7' 49.933 N	103° 31' 37.724 W
Fed Perf 1(Vaca 24 Fed - plan hits target center - Point	0.00	0.00	10,920.0	4,599.0	-622.0	409,519.00	790,916.00	32° 7' 23.808 N	103° 31' 37.709 W
PBHL(Vaca 24 Fed Com - plan hits target center - Point	0.00	0.01	10,920.0	9,780.0	-662.0	414,700.00	790,876.00	32° 8' 15.078 N	103° 31' 37.724 W

Received by OCD: 12/12/2024 8:01:37 AM

Pipe Body and API Connections Performance Data

10.750 40.50/0.350 J55

PDF

New Search »

« Back to Previous List

USC Metric

6/8/2015 10:14:05 AM

Mechanical Properties	Pipe	BTC	LTC	STC	
Minimum Yield Strength	55,000	--	--	--	psi
Maximum Yield Strength	80,000	--	--	--	psi
Minimum Tensile Strength	75,000	--	--	--	psi
Dimensions	**Pipe**	**BTC**	**LTC**	**STC**	
Outside Diameter	10.750	11.750	--	11.750	in.
Wall Thickness	0.350	--	--	--	in.
Inside Diameter	10.050	10.050	--	10.050	in.
Standard Drift	9.894	9.894	--	9.894	in.
Alternate Drift	--	--	--	--	in.
Nominal Linear Weight, T&C	40.50	--	--	--	lbs/ft
Plain End Weight	38.91	--	--	--	lbs/ft
Performance	**Pipe**	**BTC**	**LTC**	**STC**	
Minimum Collapse Pressure	1,580	1,580	--	1,580	psi
Minimum Internal Yield Pressure	3,130	3,130	--	3,130	psi
Minimum Pipe Body Yield Strength	629.00	--	--	--	1000 lbs
Joint Strength	--	700	--	420	1000 lbs
Reference Length	--	11,522	--	6,915	ft
Make-Up Data	**Pipe**	**BTC**	**LTC**	**STC**	
Make-Up Loss	--	4.81	--	3.50	in.
Minimum Make-Up Torque	--	--	--	3,150	ft-lbs
Maximum Make-Up Torque	--	--	--	5,250	ft-lbs

Released to Imaging: 12/30/2024 11:40:54 AM

VALLOUREC STAR 8.625 32# J55 S S2L2 DA 7.875 W/O# SLN # PO# MADE IN USA FT LB

vallourec

API 5CT, 10th Ed. Connection Data Sheet

O.D. (in)	WEIGHT (lb/ft)	WALL (in)	GRADE	*API DRIFT (in)	RBW %
8.625	Nominal: 32.00 Plain End: 31.13	0.352	J55	7.796	87.5

Material Properties (PE)

Pipe	
Minimum Yield Strength:	55 ksi
Maximum Yield Strength:	80 ksi
Minimum Tensile Strength:	75 ksi
Coupling	
Minimum Yield Strength:	55 ksi
Maximum Yield Strength:	80 ksi
Minimum Tensile Strength:	75 ksi

Pipe Body Data (PE)

Geometry	
Nominal ID:	7.92 inch
Nominal Area:	9.149 in^2
*Special/Alt. Drift:	7.875 inch
Performance	
Pipe Body Yield Strength:	503 kips
Collapse Resistance:	2,530 psi
Internal Yield Pressure: (API Historical)	3,930 psi

API Connection Data

Coupling OD: 9.625"

STC Performance	
STC Internal Pressure:	3,930 psi
STC Joint Strength:	372 kips
LTC Performance	
LTC Internal Pressure:	3,930 psi
LTC Joint Strength:	417 kips
SC-BTC Performance - Cplg OD = 9.125"	
BTC Internal Pressure:	3,930 psi
BTC Joint Strength:	503 kips

API Connection Torque

STC Torque (ft-lbs)

Min:	2,793	Opti:	3,724	Max:	4,655

LTC Torque (ft-lbs)

Min:	3,130	Opti:	4,174	Max:	5,217

BTC Torque (ft-lbs)

follow API guidelines regarding positional make up

*Alt. Drift will be used unless API Drift is specified on order.

**If above API connections do not suit your needs, VAM® premium connections are available up to 100% of pipe body ratings.

ALL INFORMATION IS PROVIDED BY VALLOUREC OR ITS AFFILIATES AT USER'S SOLE RISK, WITHOUT LIABILITY FOR LOSS, DAMAGE OR INJURY RESULTING FROM THE USE THEREOF; AND ON AN "AS IS" BASIS WITHOUT WARRANTY OR REPRESENTATION OF ANY KIND, WHETHER EXPRESS OR IMPLIED, INCLUDING WITHOUT LIMITATION ANY WARRANTY OF MERCHANTABILITY, FITNESS FOR PURPOSE, ACCURACY OR COMPLETENESS. THE INFORMATION CONTAINED IN THIS DOCUMENT IS PROVIDED FOR INFORMATIONAL PURPOSES ONLY AND IS BASED ON ESTIMATES THAT HAVE NOT BEEN VERIFIED OR TESTED. IN NO EVENT SHALL VALLOUREC OR ITS AFFILIATES BE RESPONSIBLE FOR ANY INDIRECT, SPECIAL, INCIDENTAL, PUNITIVE, EXEMPLARY OR CONSEQUENTIAL LOSS OR DAMAGE (INCLUDING WITHOUT LIMITATION, LOSS OF USE, LOSS OF BARGAIN, LOSS OF REVENUE, PROFIT OR ANTICIPATED PROFIT) HOWEVER CAUSED OR ARISING, AND WHETHER SUCH LOSSES OR DAMAGES WERE FORESEEABLE OR VALLOUREC OR ITS AFFILIATES WERE ADVISED OF THE POSSIBILITY OF SUCH DAMAGES.

VALLOUREC STAR 8.625 32# P110EC S S2L2 DA 7.875 W/O# SLN # PO# MADE IN USA FT LB

vallourec

API 5CT, 10th Ed. Connection Data Sheet

O.D. (in)	WEIGHT (lb/ft)	WALL (in)	GRADE	*API DRIFT (in)	RBW %
8.625	Nominal: 32.00 Plain End: 31.13	0.352	P110EC	7.796	87.5

Material Properties (PE)

Pipe	
Minimum Yield Strength:	125 ksi
Maximum Yield Strength:	140 ksi
Minimum Tensile Strength:	135 ksi
Coupling	
Minimum Yield Strength:	125 ksi
Maximum Yield Strength:	140 ksi
Minimum Tensile Strength:	135 ksi

Pipe Body Data (PE)

Geometry	
Nominal ID:	7.92 inch
Nominal Area:	9.149 in^2
*Special/Alt. Drift:	7.875 inch
Performance	
Pipe Body Yield Strength:	1,144 kips
Collapse Resistance:	4,000 psi
Internal Yield Pressure: (API Historical)	8,930 psi

THIS SIZE/GRADE IS NOT VALIDATED BY API TO HAVE AN API CONNECTION

API Connection Data

Coupling OD: 9.625"

STC Performance	
STC Internal Pressure:	8,930 psi
STC Joint Strength:	793 kips
LTC Performance	
LTC Internal Pressure:	8,930 psi
LTC Joint Strength:	887 kips
SC-BTC Performance - Cplg OD = 9.125"	
BTC Internal Pressure:	6,340 psi
BTC Joint Strength:	1,120 kips

API Connection Torque

STC Torque (ft-lbs)					
Min:	5,948	Opti:	7,930	Max:	9,913
LTC Torque (ft-lbs)					
Min:	6,653	Opti:	8,870	Max:	11,088
BTC Torque (ft-lbs)					

follow API guidelines regarding positional make up

*Alt. Drift will be used unless API Drift is specified on order.

**If above API connections do not suit your needs, VAM® premium connections are available up to 100% of pipe body ratings.

ALL INFORMATION IS PROVIDED BY VALLOUREC OR ITS AFFILIATES AT USER'S SOLE RISK, WITHOUT LIABILITY FOR LOSS, DAMAGE OR INJURY RESULTING FROM THE USE THEREOF; AND ON AN "AS IS" BASIS WITHOUT WARRANTY OR REPRESENTATION OF ANY KIND, WHETHER EXPRESS OR IMPLIED, INCLUDING WITHOUT LIMITATION ANY WARRANTY OF MERCHANTABILITY, FITNESS FOR PURPOSE, ACCURACY OR COMPLETENESS. THE INFORMATION CONTAINED IN THIS DOCUMENT IS PROVIDED FOR INFORMATIONAL PURPOSES ONLY AND IS BASED ON ESTIMATES THAT HAVE NOT BEEN VERIFIED OR TESTED. IN NO EVENT SHALL VALLOUREC OR ITS AFFILIATES BE RESPONSIBLE FOR ANY INDIRECT, SPECIAL, INCIDENTAL, PUNITIVE, EXEMPLARY OR CONSEQUENTIAL LOSS OR DAMAGE (INCLUDING WITHOUT LIMITATION, LOSS OF USE, LOSS OF BARGAIN, LOSS OF REVENUE, PROFIT OR ANTICIPATED PROFIT) HOWEVER CAUSED OR ARISING, AND WHETHER SUCH LOSSES OR DAMAGES WERE FORESEEABLE OR VALLOUREC OR ITS AFFILIATES WERE ADVISED OF THE POSSIBILITY OF SUCH DAMAGES.

eog resources

Vaca 24 Fed Com Package

Wells in package:	Tgt TVD
Vaca 24 Fed Com #201H	10,170
Vaca 24 Fed Com #202H	10,170
Vaca 24 Fed Com #203H	10,170
Vaca 24 Fed Com #204H	10,170
Vaca 24 Fed Com #205H	10,170
Vaca 24 Fed Com #301H	10,300
Vaca 24 Fed Com #302H	10,300
Vaca 24 Fed Com #303H	10,300
Vaca 24 Fed Com #304H	10,300
Vaca 24 Fed Com #305H	10,300
Vaca 24 Fed Com #306H	10,300
Vaca 24 Fed Com #401H	10,590
Vaca 24 Fed Com #402H	10,590
Vaca 24 Fed Com #403H	10,590
Vaca 24 Fed Com #404H	10,590
Vaca 24 Fed Com #501H	10,920
Vaca 24 Fed Com #502H	10,920
Vaca 24 Fed Com #503H	10,920
Vaca 24 Fed Com #504H	10,920
Vaca 24 Fed Com #505H	10,920
Vaca 24 Fed Com #506H	10,920
Vaca 24 Fed Com #507H	10,920
Vaca 24 Fed Com #508H	10,920
Vaca 24 Fed Com #741H	13,060
Vaca 24 Fed Com #742H	13,060
Vaca 24 Fed Com #743H	13,060
Vaca 24 Fed Com #744H	13,060
Vaca 24 Fed Com #745H	13,060
Vaca 24 Fed Com #751H	13,110
Vaca 24 Fed Com #752H	13,110
Vaca 24 Fed Com #753H	13,110
Vaca 24 Fed Com #754H	13,110
Vaca 24 Fed Com #755H	13,110
Vaca 24 Fed Com #756H	13,110

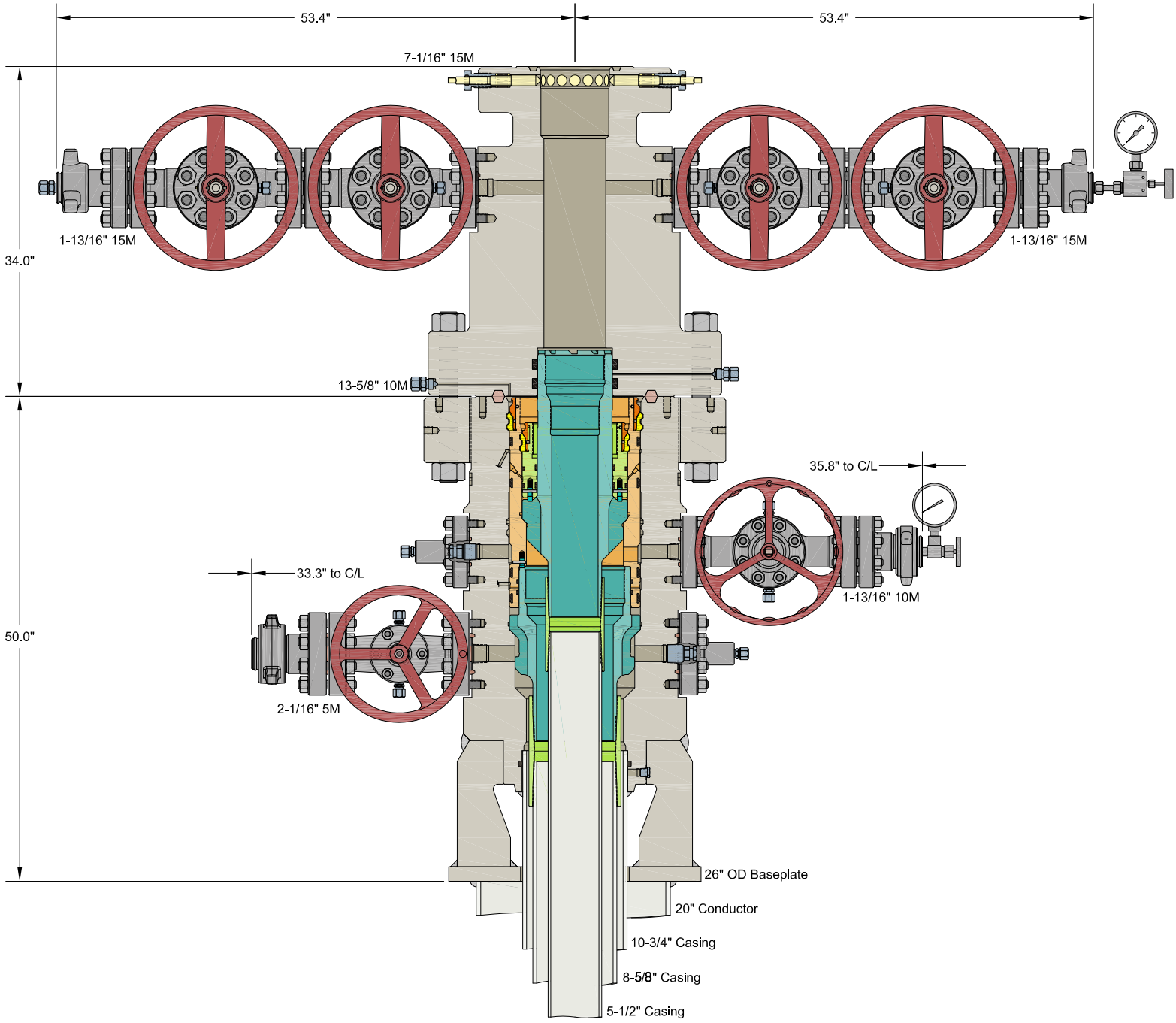

INFORMATION CONTAINED HEREIN IS THE PROPERTY OF CACTUS WELLHEAD, LLC. REPRODUCTION, DISCLOSURE, OR USE THEREOF IS PERMISSIBLE ONLY AS PROVIDED BY CONTRACT OR AS EXPRESSLY AUTHORIZED BY CACTUS WELLHEAD, LLC.

ALL DIMENSIONS APPROXIMATE

CACTUS WELLHEAD LLC	EOG RESOURCES		
10-3/4" x 8-5/8" x 5-1/2" MBU-3T-SF-SOW Wellhead System With 8-5/8" & 5-1/2" Pin Bottom Mandrel Casing Hangers And 13-5/8" 10M x 7-1/16" 15M CTH-DBLHPS Tubing Head	DRAWN	DLE	14APR21
	APPRV		
	DRAWING NO.	SDT-3141	

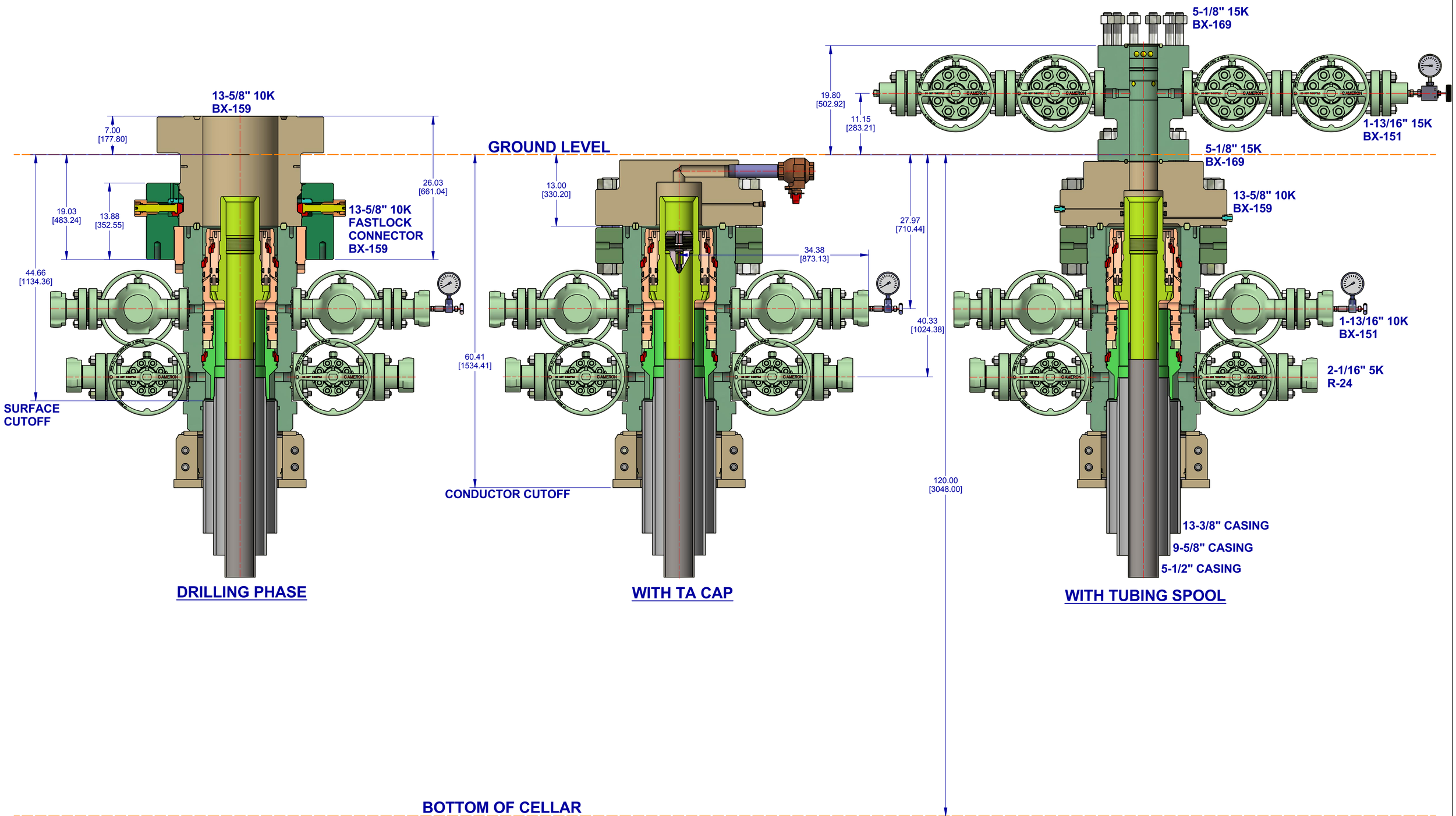

CONFIDENTIAL

THIRD ANGLE	DESIGNED IN INCHES	MACHINING TOLERANCES UNLESS OTHERWISE SPECIFIED	SURFACE TREATMENT: DO NOT SCALE
	DIMENSIONAL UNITS: INCHES [MILLIMETERS]	.X [0.] ± = [] ; ANGLES ± °	DRAWN BY: KEN REED — DATE: 6 Nov 18
MACHINED FILLET RADII .015-.050 [0.38-1.27]. BREAK ALL SHARP EDGES .01-.03 [0.2-0.8] RADII OR 45°. SURFACE FINISH IN MICRO (µ) INCHES (Ra). INTERPRET DRAWING PER ASME Y14.5, ASME Y14.36, AND AWS A2.4 STANDARDS. SEE B/M FOR MATERIAL AND SPECIAL REQUIREMENTS. ITEM NUMBERS NOT APPEARING ON B/M DO NOT APPLY.		.XX [0.X] ± = [] ; .XXX [0.XX] ± = [] ; RA ON ALL MACHINED SURFACES	MATERIAL & HEAT TREAT — CHECKED BY: PA — DATE: 6 Nov 18
			APPROVED BY: APPROVER NAME — DATE: 6 Nov 18
			ESTIMATED WEIGHT: 8147.2 LBS / 3695.5 KG — INITIAL USE B/M: EWR:650353762

CAMERON — A Schlumberger Company — SURFACE SYSTEMS

EOG RESOURCES, INC
13-5/8" 10K MN-DS WELLHEAD
13-3/8" X 9-5/8" X 5-1/2"

SHEET 1 OF 1 — SD-052491-19-07 — REV. 01

INVENTOR - D

PECOS DISTRICT
DRILLING CONDITIONS OF APPROVAL

OPERATOR'S NAME:	EOG RESOURCES INCORPORATED
WELL NAME & NO.:	VACA 24 FED COM 504H
LOCATION:	Section 24, T.25 S., R.33 E.
COUNTY:	Lea County, New Mexico

COA

H2S	◉ Yes	○ No	
Potash	◉ None	○ Secretary	○ R-111-P
Cave/Karst Potential	◉ Low	○ Medium	○ High
Cave/Karst Potential	○ Critical		
Variance	○ None	◉ Flex Hose	○ Other
Wellhead	○ Conventional	◉ Multibowl	○ Both
Wellhead Variance	○ Diverter		
Other	☐ 4 String	☐ Capitan Reef	☐ WIPP
Other	☐ Fluid Filled	☐ Pilot Hole	☐ Open Annulus
Cementing	☐ Contingency Cement Squeeze	☐ EchoMeter	☐ Primary Cement Squeeze
Special Requirements	☐ Water Disposal	☐ COM	☐ Unit
Special Requirements	☐ Batch Sundry		
Special Requirements Variance	☑ Break Testing	☑ Offline Cementing	☑ Casing Clearance

A. HYDROGEN SULFIDE

A Hydrogen Sulfide (H2S) Drilling Plan shall be activated AT SPUD. As a result, the Hydrogen Sulfide area must meet Onshore Order 6 requirements, which includes equipment and personnel/public protection items. If Hydrogen Sulfide is encountered, please provide measured values and formations to the BLM.

B. CASING

Shallow Design A:

1. The **13-3/8** inch surface casing shall be set at approximately **1,130** feet **TVD** (a minimum of 25 feet (Lea County) into the Rustler Anhydrite, above the salt, and below usable fresh water) and cemented to the surface.

    a. If cement does not circulate to the surface, the appropriate BLM office shall be notified and a temperature survey utilizing an electronic type temperature

survey with surface log readout will be used or a cement bond log shall be run to verify the top of the cement. Temperature survey will be run a minimum of six hours after pumping cement and ideally between 8-10 hours after completing the cement job.

b. Wait on cement (WOC) time for a primary cement job will be a minimum of **8 hours** or 500 pounds compressive strength, whichever is greater. (This is to include the lead cement)
c. Wait on cement (WOC) time for a remedial job will be a minimum of 4 hours after bringing cement to surface or 500 pounds compressive strength, whichever is greater.
d. If cement falls back, remedial cementing will be done prior to drilling out that string.

2. The **9-5/8** inch intermediate casing shall be set at approximately **5090** feet **TVD**.
   a. Mud weight could brine up to 10.2ppg. Reviewed and OK
   b. Keep casing half full during run for collapse SF

   The minimum required fill of cement behind the **9-5/8** inch intermediate casing is:

   - Cement to surface. If cement does not circulate see B.1.a, c-d above.

3. The **5-1/2** inch production casing shall be set at approximately **21,188** feet. The minimum required fill of cement behind the **5-1/2** inch production casing is:

   - Cement should tie-back at least **200 feet** into previous casing string. Operator shall provide method of verification.

Shallow Design B:

1. The **10-3/4** inch surface casing shall be set at approximately **1,130** feet **TVD** (a minimum of 25 feet (Lea County) into the Rustler Anhydrite, above the salt, and below usable fresh water) and cemented to the surface.

   a. If cement does not circulate to the surface, the appropriate BLM office shall be notified and a temperature survey utilizing an electronic type temperature survey with surface log readout will be used or a cement bond log shall be run to verify the top of the cement. Temperature survey will be run a minimum of six hours after pumping cement and ideally between 8-10 hours after completing the cement job.
   b. Wait on cement (WOC) time for a primary cement job will be a minimum of **8 hours** or 500 pounds compressive strength, whichever is greater. (This is to include the lead cement)
   c. Wait on cement (WOC) time for a remedial job will be a minimum of 4 hours after bringing cement to surface or 500 pounds compressive strength, whichever is greater.

d. If cement falls back, remedial cementing will be done prior to drilling out that string.

2. The **8-5/8** inch intermediate casing shall be set at approximately **5090** feet **TVD**.
   a. Mud weight could brine up to 10.2ppg. Reviewed and OK
   b. Keep casing half full during run for collapse SF

   The minimum required fill of cement behind the **8-5/8** inch intermediate casing is:

   - Cement to surface. If cement does not circulate see B.1.a, c-d above.

3. The **5-1/2** inch production casing shall be set at approximately **21,188** feet. The minimum required fill of cement behind the **5-1/2** inch production casing is:

   - Cement should tie-back at least **200 feet** into previous casing string. Operator shall provide method of verification.

C. PRESSURE CONTROL

1. Variance approved to use flex line from BOP to choke manifold. Manufacturer's specification to be readily available. No external damage to flex line. Flex line to be installed as straight as possible (no hard bends).'

2. Operator has proposed a multi-bowl wellhead assembly. This assembly will only be tested when installed on the **13-3/8** inch surface casing. Minimum working pressure of the blowout preventer (BOP) and related equipment (BOPE) required for drilling below the surface casing shoe shall be **5000 (5M)** psi. **Variance is approved to use a 5000 (5M) Annular which shall be tested to 3500 (70% Working Pressure) psi.**

   a. Wellhead shall be installed by manufacturer's representatives, submit documentation with subsequent sundry.
   b. If the welding is performed by a third party, the manufacturer's representative shall monitor the temperature to verify that it does not exceed the maximum temperature of the seal.
   c. Manufacturer representative shall install the test plug for the initial BOP test.
   d. If the cement does not circulate and one inch operations would have been possible with a standard wellhead, the well head shall be cut off, cementing operations performed and another wellhead installed.
   e. Whenever any seal subject to test pressure is broken, all the tests in OOGO2.III.A.2.i must be followed.

D. SPECIAL REQUIREMENT (S)

(Note: For a minimum 5M BOPE or less (Utilizing a 10M BOPE system)
BOPE Break Testing Variance

- BOPE Break Testing is ONLY permitted for 5M BOPE or less. **(Annular preventer**

must be tested to a minimum of 70% of BOPE working pressure and shall be higher than the MASP)

- BOPE Break Testing is NOT permitted to drilling the production hole section.
- Variance only pertains to the intermediate hole-sections and no deeper than the Bone Springs formation.
- While in transfer between wells, the BOPE shall be secured by the hydraulic carrier or cradle.
- Any well control event while drilling require notification to the BLM Petroleum Engineer **(575-706-2779)** prior to the commencement of any BOPE Break Testing operations.
- A full BOPE test is required prior to drilling the first deep intermediate hole section. If any subsequent hole interval is deeper than the first, a full BOPE test will be required. (200' TVD tolerance between intermediate shoes is allowable).
- The BLM is to be contacted (575-689-5981 Lea County) 4 hours prior to BOPE tests.
- As a minimum, a full BOPE test shall be performed at 21-day intervals.
- In the event any repairs or replacement of the BOPE is required, the BOPE shall test as per 43 CFR part 3170 Subpart 3172.
- If in the event break testing is not utilized, then a full BOPE test would be conducted.

Offline Cementing

OK for surface and intermediate intervals. Notify the BLM prior to the commencement of any offline cementing procedure.

Casing Clearance:

- Salt annular clearance variance in place for the intermediate interval
- Overlap clearance OK in the production interval

Operator shall clean up cycles until wellbore is clear of cuttings and any large debris, ensure cutting sizes are adequate "coffee ground or less" before cementing.

GENERAL REQUIREMENTS

The BLM is to be notified in advance for a representative to witness:

a. Spudding well (minimum of 24 hours)
b. Setting and/or Cementing of all casing strings (minimum of 4 hours)
c. BOPE tests (minimum of 4 hours)

Contact Eddy County Petroleum Engineering Inspection Staff:

Email or call the Carlsbad Field Office, 620 East Greene St., Carlsbad, NM 88220; **BLM_NM_CFO_DrillingNotifications@BLM.GOV**; (575) 361-2822

Contact Lea County Petroleum Engineering Inspection Staff:

Call the Hobbs Field Station, 414 West Taylor, Hobbs NM 88240, (575) 689-5981

1. Unless the production casing has been run and cemented or the well has been properly plugged, the drilling rig shall not be removed from over the hole without prior approval.
   a. In the event the operator has proposed to drill multiple wells utilizing a skid/walking rig. Operator shall secure the wellbore on the current well, after installing and testing the wellhead, by installing a blind flange of like pressure rating to the wellhead and a pressure gauge that can be monitored while drilling is performed on the other well(s).
   b. When the operator proposes to set surface casing with Spudder Rig
      i. Notify the BLM when moving in and removing the Spudder Rig.
      ii. Notify the BLM when moving in the 2nd Rig. Rig to be moved in within 90 days of notification that Spudder Rig has left the location.
      iii. BOP/BOPE test to be conducted per **43 CFR 3172** as soon as 2nd Rig is rigged up on well.
2. Floor controls are required for 3M or Greater systems. These controls will be on the rig floor, unobstructed, readily accessible to the driller and will be operational at all times during drilling and/or completion activities. Rig floor is defined as the area immediately around the rotary table; the area immediately above the substructure on which the draw works are located, this does not include the dog house or stairway area.
3. For intervals in which cement to surface is required, cement to surface should be verified with a visual check and density or pH check to differentiate cement from spacer and drilling mud. The results should be documented in the driller's log and daily reports.

A. **CASING**

1. Changes to the approved APD casing program need prior approval if the items substituted are of lesser grade or different casing size or are Non-API. The Operator can exchange the components of the proposal with that of superior strength (i.e. changing from J-55 to N-80, or from 36# to 40#). Changes to the approved cement program need prior approval if the altered cement plan has less volume or strength or if the changes are substantial (i.e. Multistage tool, ECP, etc.). The initial wellhead installed on the well will remain on the well with spools used as needed.
2. Wait on cement (WOC) for Potash Areas: After cementing but before commencing any tests, the casing string shall stand cemented under pressure until both of the following conditions have been met: 1) cement reaches a minimum compressive strength of 500 psi for all cement blends of both lead and tail cement, 2) until cement has been in place at least 8 hours. WOC time will be recorded in the driller's log. The casing integrity test can be done (prior to the cement setting up) immediately after bumping the plug.
3. Wait on cement (WOC) for Water Basin: After cementing but before commencing any tests, the casing string shall stand cemented under pressure until both of the following conditions have been met: 1) cement reaches a minimum compressive strength of 500 psi at the shoe, 2) until cement has been in place at least 8 hours. WOC time will be recorded in the driller's log. See individual casing strings for details regarding lead cement slurry requirements. The casing integrity test can be done (prior to the cement setting up) immediately after bumping the plug.
4. Provide compressive strengths including hours to reach required 500 pounds compressive strength prior to cementing each casing string. Have well specific cement details onsite prior to pumping the cement for each casing string.

5. No pea gravel permitted for remedial or fall back remedial without prior authorization from the BLM engineer.
6. On that portion of any well approved for a 5M BOPE system or greater, a pressure integrity test of each casing shoe shall be performed. Formation at the shoe shall be tested to a minimum of the mud weight equivalent anticipated to control the formation pressure to the next casing depth or at total depth of the well. This test shall be performed before drilling more than 20 feet of new hole.
7. If hardband drill pipe is rotated inside casing, returns will be monitored for metal. If metal is found in samples, drill pipe will be pulled and rubber protectors which have a larger diameter than the tool joints of the drill pipe will be installed prior to continuing drilling operations.
8. Whenever a casing string is cemented in the R-111-Q potash area, the NMOCD requirements shall be followed.

B. **PRESSURE CONTROL**

1. All blowout preventer (BOP) and related equipment (BOPE) shall comply with well control requirements as described in **43 CFR 3172**.
2. If a variance is approved for a flexible hose to be installed from the BOP to the choke manifold, the following requirements apply: The flex line must meet the requirements of API 16C. Check condition of flexible line from BOP to choke manifold, replace if exterior is damaged or if line fails test. Line to be as straight as possible with no hard bends and is to be anchored according to Manufacturer's requirements. The flexible hose can be exchanged with a hose of equal size and equal or greater pressure rating. Anchor requirements, specification sheet and hydrostatic pressure test certification matching the hose in service, to be onsite for review. These documents shall be posted in the company man's trailer and on the rig floor.
3. 5M or higher system requires an HCR valve, remote kill line and annular to match. The remote kill line is to be installed prior to testing the system and tested to stack pressure.
4. If the operator has proposed a multi-bowl wellhead assembly in the APD. The following requirements must be met:
    i. Wellhead shall be installed by manufacturer's representatives, submit documentation with subsequent sundry.
    ii. If the welding is performed by a third party, the manufacturer's representative shall monitor the temperature to verify that it does not exceed the maximum temperature of the seal.
    iii. Manufacturer representative shall install the test plug for the initial BOP test.
    iv. Whenever any seal subject to test pressure is broken, all the tests in 43 CFR 3172.6(b)(9) must be followed.
    v. If the cement does not circulate and one inch operations would have been possible with a standard wellhead, the well head shall be cut off, cementing operations performed and another wellhead installed.
5. The appropriate BLM office shall be notified a minimum of 4 hours in advance for a representative to witness the tests.
    i. In a water basin, for all casing strings utilizing slips, these are to be set as soon as the crew and rig are ready and any fallback cement remediation has been done. The casing cut-off and BOP installation can be initiated four hours after installing the slips, which will be approximately six hours after bumping the plug. For those casing strings not using slips, the minimum wait time before cut-off is eight hours after bumping the plug. BOP/BOPE testing can begin after cut-off or once cement reaches 500 psi compressive strength (including lead cement), whichever is greater. However, if the float does not hold, cut-off cannot be initiated until

cement reaches 500 psi compressive strength (including lead when specified).

ii. In potash areas, for all casing strings utilizing slips, these are to be set as soon as the crew and rig are ready and any fallback cement remediation has been done. For all casing strings, casing cut-off and BOP installation can be initiated at twelve hours after bumping the cement plug. The BOPE test can be initiated after bumping the cement plug with the casing valve open. (only applies to single stage cement jobs, prior to the cement setting up.)

iii. The tests shall be done by an independent service company utilizing a test plug not a cup or J-packer and can be initiated immediately with the casing valve open. The operator also has the option of utilizing an independent tester to test without a plug (i.e. against the casing) pursuant to **43 CFR 3172** with the pressure not to exceed 70% of the burst rating for the casing. Any test against the casing must meet the WOC time for 8 hours or 500 pounds compressive strength, whichever is greater, prior to initiating the test (see casing segment as lead cement may be critical item).

iv. The test shall be run on a 5000 psi chart for a 2-3M BOP/BOP, on a 10000 psi chart for a 5M BOP/BOPE and on a 15000 psi chart for a 10M BOP/BOPE. If a linear chart is used, it shall be a one hour chart. A circular chart shall have a maximum 2 hour clock. If a twelve hour or twenty-four hour chart is used, tester shall make a notation that it is run with a two hour clock.

v. The results of the test shall be reported to the appropriate BLM office.

vi. All tests are required to be recorded on a calibrated test chart. A copy of the BOP/BOPE test chart and a copy of independent service company test will be submitted to the appropriate BLM office.

vii. The BOP/BOPE test shall include a low pressure test from 250 to 300 psi. The test will be held for a minimum of 10 minutes if test is done with a test plug and 30 minutes without a test plug. This test shall be performed prior to the test at full stack pressure.

viii. BOP/BOPE must be tested by an independent service company within 500 feet of the top of the Wolfcamp formation if the time between the setting of the intermediate casing and reaching this depth exceeds 20 days. This test does not exclude the test prior to drilling out the casing shoe as per **43 CFR 3172**.

C. DRILLING MUD

Mud system monitoring equipment, with derrick floor indicators and visual and audio alarms, shall be operating before drilling into the Wolfcamp formation, and shall be used until production casing is run and cemented.

D. WASTE MATERIAL AND FLUIDS

All waste (i.e. drilling fluids, trash, salts, chemicals, sewage, gray water, etc.) created as a result of drilling operations and completion operations shall be safely contained and disposed of properly at a waste disposal facility. No waste material or fluid shall be disposed of on the well location or surrounding area. Porto-johns and trash containers will be on-location during fracturing operations or any other crew-intensive operations.

KPI 10/5/2024

AFMSS
U.S. Department of the Interior
BUREAU OF LAND MANAGEMENT

Operator Certification Data Report
12/11/2024

Operator

I hereby certify that I, or someone under my direct supervision, have inspected the drill site and access route proposed herein; that I am familiar with the conditions which currently exist; that I have full knowledge of state and Federal laws applicable to this operation; that the statements made in this APD package are, to the best of my knowledge, true and correct; and that the work associated with the operations proposed herein will be performed in conformity with this APD package and the terms and conditions under which it is approved. I also certify that I, or the company I represent, am responsible for the operations conducted under this application. These statements are subject to the provisions of 18 U.S.C. 1001 for the filing of false statements.

NAME: LISA TRASCHER **Signed on:** 11/26/2024

Title: Regulatory Specialist

Street Address: 5509 Champions Drive

City: Midland **State:** TX **Zip:** 79706

Phone: (432)247-6331

Email address: lisa_trascher@eogresources.com

Field

Representative Name:

Street Address:

City: **State:** **Zip:**

Phone:

Email address:

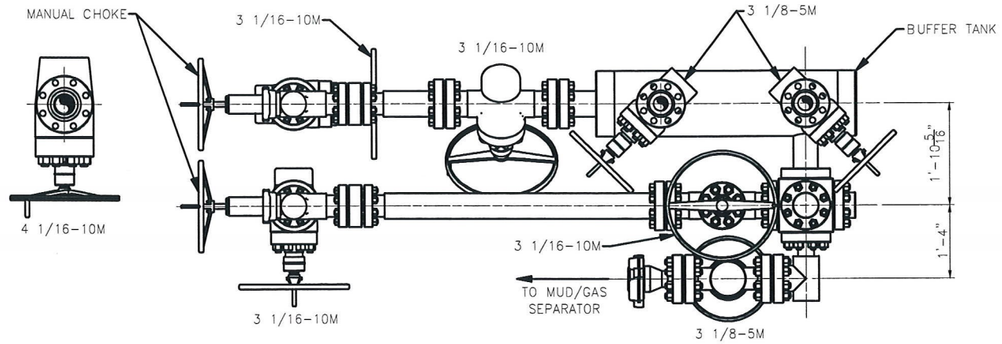

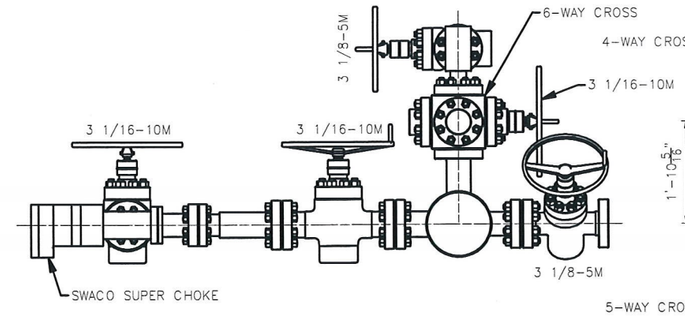

VIEW A-A

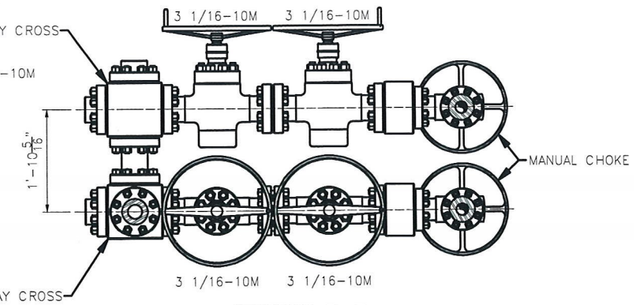

SECTION B-B

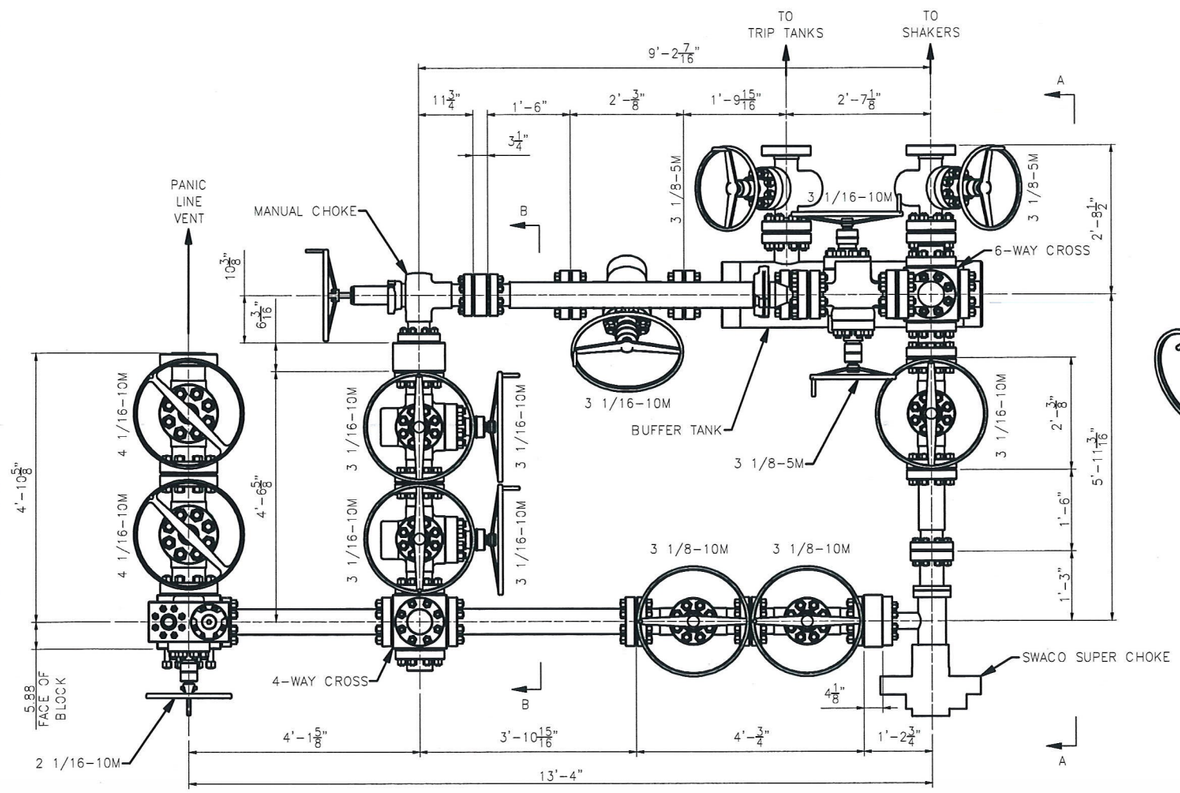

PLAN VIEW

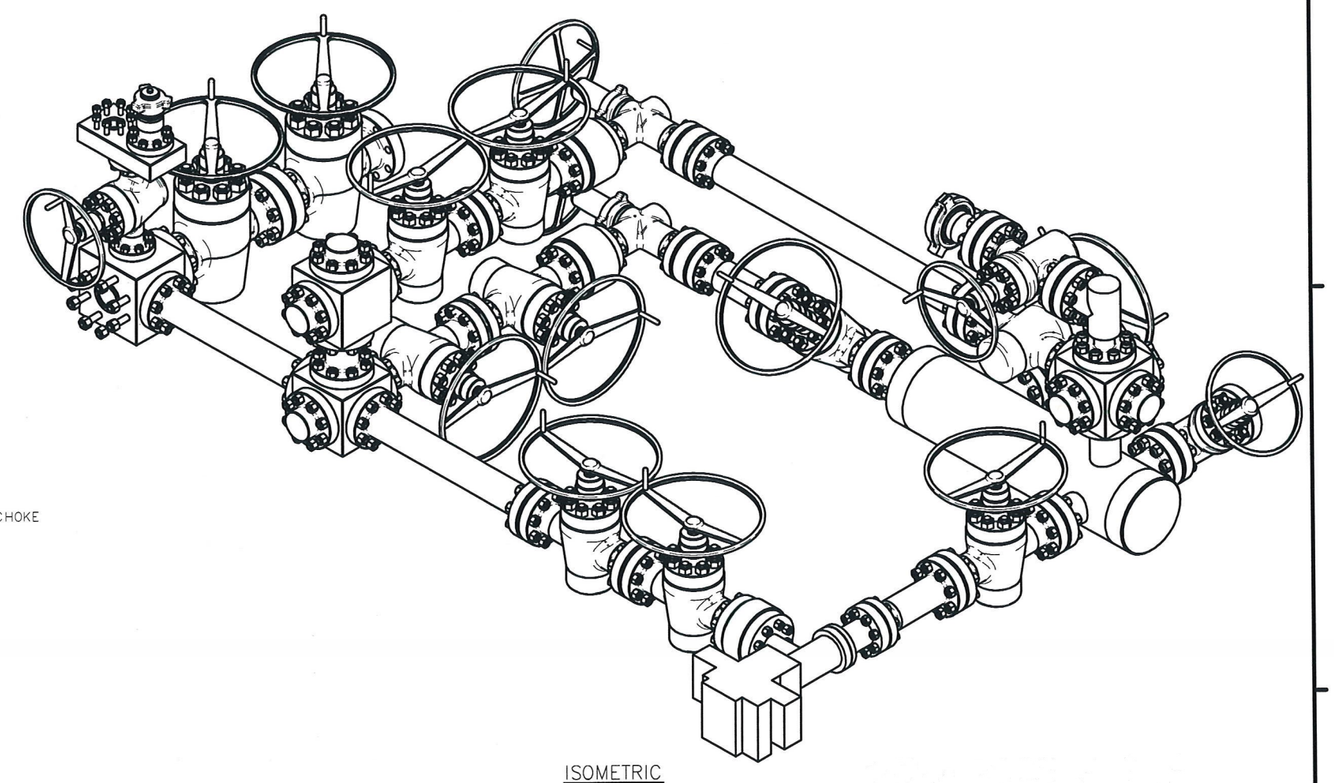

ISOMETRIC

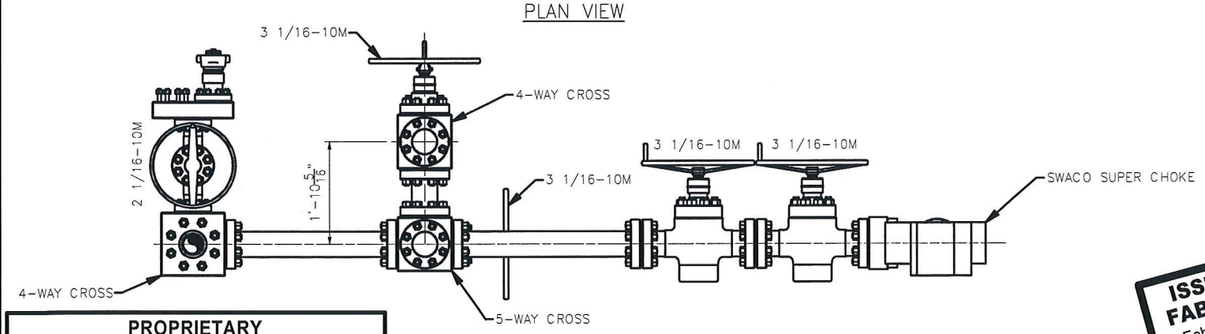

PROPRIETARY

THIS DRAWING AND THE IDEAS AND INFORMATION INCLUDED IN THIS DRAWING ARE PROPRIETARY AND ARE NOT TO BE REPRODUCED, DISTRIBUTED OR DISCLOSED IN ANY MANNER, WITHOUT THE PRIOR, WRITTEN CONSENT OF A DULY AUTHORIZED OFFICER OF HELMERICH & PAYNE INT'L DRILLING CO.

ISSUED FOR FABRICATION
February-10-2014
DRAFTSMAN MWL
ENGINEER

STANDARD TOLERANCES
(UNLESS NOTED)

1. FABRICATION DIMENSIONS:	A-0" TO 24"	± 1/16"
	B-24" TO 120"	± 1/8"
	C-OVER 120"	± 1/4"
2. MACHINED DIMENSIONS:	A-ANGULAR	± .30'
	B-LINEAR (EXPRESSED AS FRACTION)	± .015
	LINEAR (EXPRESSED TO ONE DECIMAL)	± .1
	LINEAR (EXPRESSED TO TWO DECIMALS)	± .015
	LINEAR (EXPRESSED TO THREE DECIMALS)	± .005

REV	DATE	DESCRIPTION	BY
–			

HELMERICH & PAYNE INTERNATIONAL DRILLING CO.

TITLE: 3 CHOKE, 3 LEVEL, 10M CHOKE MANIFOLD G.A.

CUSTOMER: H&P

PROJECT:

DRAWN: MWL	DATE: 2/10/2014	DWG. NO.: HP-D1254	REV: –
SCALE: 3/4"=1'-0"	SHEET: 1 OF 1		

Nabors 1210
Choke hose
10-28-22

BLACK GOLD®

GATES ENGINEERING & SERVICES NORTH AMERICA
7603 Prairie Oak Dr.
Houston, TX. 77086

PHONE: +1 (281) 602-4100
FAX: +1 (281) 602-4147
EMAIL: gesna.quality@gates.com
WEB: www.gates.com/oilandgas

CERTIFICATE OF CONFORMANCE

This is to verify that the items detailed below meet the requirements of the Customer's Purchase Order referenced herein, and are in Conformance with applicable specifications, and that Records of Required Tests are on file and subject to examination. The following items were inspected and hydrostatically tested at **Gates Engineering & Services North America** facilities in Houston, TX, USA.

CUSTOMER:	NABORS DRILLING TECHNOLOGIES USA DBA NABORS DRILLING USA
CUSTOMER P.O.#:	15485579 (NABORS PO#15485579 SN 73981ASSET 66-1486)
CUSTOMER P/N:	IMR RETEST SN 73981 ASSET #66-1486
PART DESCRIPTION:	RETEST OF CUSTOMER 3" X 45 FT 16C CHOKE & KILL HOSE ASSEMBLY C/W 4 1/16" 10K FLANGES
SALES ORDER #:	525500
QUANTITY:	1
SERIAL #:	73981 H3-101822-15

SIGNATURE: _____

TITLE: QUALITY ASSURANCE

DATE: 10/18/2022

H3-10667

10/18/2022 11:48:25 AM

TEST REPORT

CUSTOMER			TEST OBJECT		
Company:	Nabors Industries Inc.		Serial number:	H3-101822-15	
			Lot number:		
Production description:			Description:		
Sales order #:	525500				
Customer reference:	FG0144 NABORS PO#15485579 SN 73981 ASSET 66-1486		Hose ID:	3.0 CK03 16C 10K	
			Part number:		
TEST INFORMATION					
Test procedure:	GTS-04-053		Fitting 1:	3.0 x 4-1/16 10K	
Test pressure:	15000.00	psi	Part number:		
Test pressure hold:	3600.00	sec	Description:		
Work pressure:	10000.00	psi			
Work pressure hold:	900.00	sec	Fitting 2:	3.0 x 4-1/16 10K	
Length difference:	0.00	%	Part number:		
Length difference:	0.00	inch	Description:		
Visual check:			Length:	45	feet
Pressure test result:	PASS				
Length measurement result:					
Test operator:	Martin				

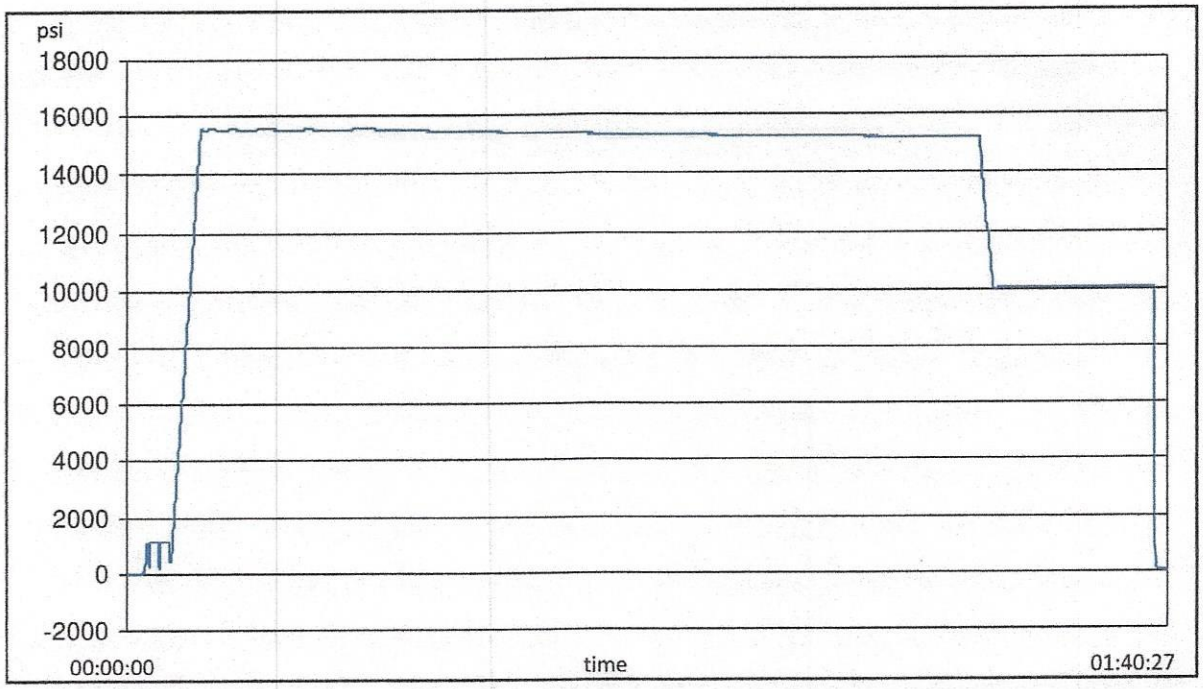

Filename: D:\Certificates\Report_101822-H3-101822-15.pdf

H3-10667

10/18/2022 11:48:25 AM

TEST REPORT

GAUGE TRACEABILITY

Description	Serial number	Calibration date	Calibration due date
S-25-A-W	110AMCL2	2022-01-10	2023-01-10
S-25-A-W	110APO2K	2022-01-10	2023-01-10

Comment

®

American Petroleum Institute

2018-151 | Digital

Certificate of Authority to use the Official API Monogram

License Number: 7K-0519 **ORIGINAL**

The American Petroleum Institute hereby grants to

GATES ENGINEERING AND SERVICES
7603 Prairie Oak Drive, Suite 190
Houston, TX
United States

the right to use the Official API Monogram® on manufactured products under the conditions in the official publications of the American Petroleum Institute entitled API Spec Q1® and **API-7K** and in accordance with the provisions of the License Agreement.

In all cases where the Official API Monogram is applied, the API Monogram shall be used in conjunction with this certificate number: **7K-0519**

The American Petroleum Institute reserves the right to revoke this authorization to use the Official API Monogram for any reason satisfactory to the Board of Directors of the American Petroleum Institute.

The scope of this license includes the following: High Pressure Mud and Cement Hoses at FSL 0, at FSL 1, at FSL 2

QMS Exclusions: Servicing

Effective Date: DECEMBER 18, 2021
Expiration Date: DECEMBER 18, 2024

Vice President of Product Management

To verify the authenticity of this license, go to www.api.org/compositelist.

®

American Petroleum Institute

2018-151 | Digital

Certificate of Authority to use the Official API Monogram

License Number: 16C-0485 **ORIGINAL**

The American Petroleum Institute hereby grants to

GATES ENGINEERING AND SERVICES
7603 Prairie Oak Drive, Suite 190
Houston, TX
United States

the right to use the Official API Monogram® on manufactured products under the conditions in the official publications of the American Petroleum Institute entitled API Spec Q1® and **API-16C** and in accordance with the provisions of the License Agreement.

In all cases where the Official API Monogram is applied, the API Monogram shall be used in conjunction with this certificate number: **16C-0485**

The American Petroleum Institute reserves the right to revoke this authorization to use the Official API Monogram for any reason satisfactory to the Board of Directors of the American Petroleum Institute.

The scope of this license includes the following: Flexible Choke and Kill Lines atFSL 0, FSL 1, FSL 2, FSL 3

QMS Exclusions: Servicing

Effective Date: DECEMBER 18, 2021
Expiration Date: DECEMBER 18, 2024

Vice President of Product Management

To verify the authenticity of this license, go to www.api.org/compositelist.

American Petroleum Institute

REGISTRATION NO. Q1-3650

Certificate of Registration

The American Petroleum Institute certifies that the quality management system of

GATES ENGINEERING AND SERVICES
7603 Prairie Oak Drive, Suite 190
Houston, TX
United States

has been assessed by the American Petroleum Institute and found to be in conformance with the following:

API Spec Q1, 9th Edition

The scope of this registration and the approved quality management system applies to the:

Assembly and Pressure Test of High Pressure Mud and Cement Hoses, Flexible Choke and Kill Lines, and General Rubber Hydraulic Hose Assemblies

API approves the organization's justification for excluding:

Servicing

API Spec Q1 Registered ®

Effective Date:	**DECEMBER 18, 2021**
Expiration Date:	**DECEMBER 18, 2024**
Registered Since:	**DECEMBER 18, 2018**

Vice President of Product Management

This certificate is valid for the period specified herein. The registered organization must continually meet all requirements of API Spec Q1, *Specification for Quality Management System Requirements for Manufacturing Organizations for the Petroleum and Natural Gas Industry,* and the requirements of the Registration Agreement. Registration is maintained and regularly monitored through annual full system audits. This certificate has been issued from API offices located at 200 Massachusetts Avenue, NW Suite 1100, Washington, DC 20001-5571, U.S.A. It is the property of API, and must be returned upon request. **To verify the authenticity of this certificate, go to www.api.org/compositelist.**

2021-164 | 10.21 | Digital

Exhibit 1
EOG Resources
13-5/8” 10M PSI BOP Stack

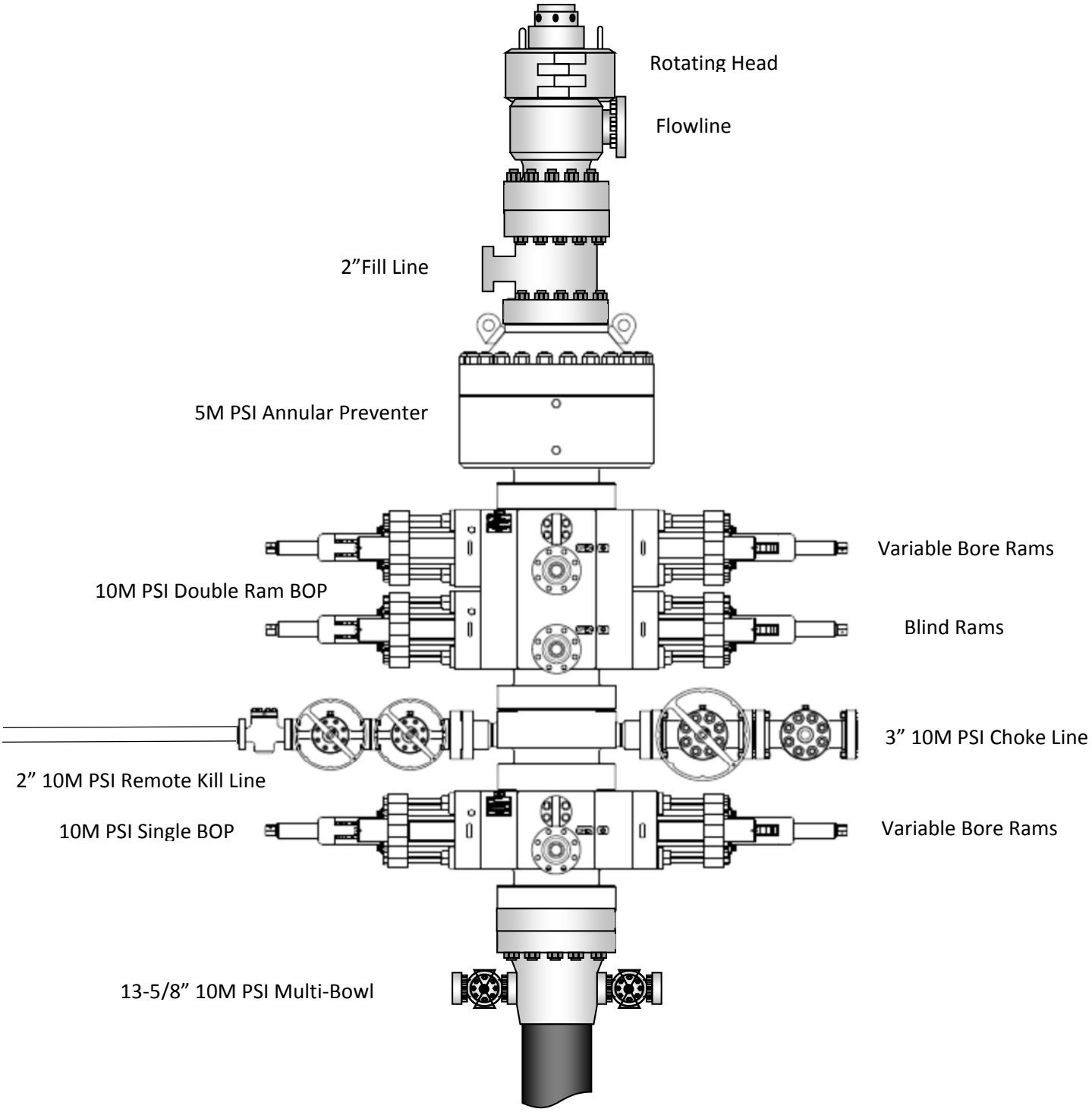

Nabors 1210
Choke hose
10-28-22

BLACK GOLD®

GATES ENGINEERING & SERVICES NORTH AMERICA
7603 Prairie Oak Dr.
Houston, TX. 77086

PHONE: +1 (281) 602-4100
FAX: +1 (281) 602-4147
EMAIL: gesna.quality@gates.com
WEB: www.gates.com/oilandgas

CERTIFICATE OF CONFORMANCE

This is to verify that the items detailed below meet the requirements of the Customer's Purchase Order referenced herein, and are in Conformance with applicable specifications, and that Records of Required Tests are on file and subject to examination. The following items were inspected and hydrostatically tested at **Gates Engineering & Services North America** facilities in Houston, TX, USA.

CUSTOMER:	NABORS DRILLING TECHNOLOGIES USA DBA NABORS DRILLING USA
CUSTOMER P.O.#:	15485579 (NABORS PO#15485579 SN 73981ASSET 66-1486)
CUSTOMER P/N:	IMR RETEST SN 73981 ASSET #66-1486
PART DESCRIPTION:	RETEST OF CUSTOMER 3" X 45 FT 16C CHOKE & KILL HOSE ASSEMBLY C/W 4 1/16" 10K FLANGES
SALES ORDER #:	525500
QUANTITY:	1
SERIAL #:	73981 H3-101822-15

SIGNATURE: _____

TITLE: QUALITY ASSURANCE

DATE: 10/18/2022

H3-10667

10/18/2022 11:48:25 AM

TEST REPORT

CUSTOMER			TEST OBJECT		
Company:	Nabors Industries Inc.		Serial number:	H3-101822-15	
			Lot number:		
Production description:			Description:		
Sales order #:	525500				
Customer reference:	FG0144 NABORS PO#15485579 SN 73981 ASSET 66-1486		Hose ID:	3.0 CK03 16C 10K	
			Part number:		
TEST INFORMATION					
Test procedure:	GTS-04-053		Fitting 1:	3.0 x 4-1/16 10K	
Test pressure:	15000.00	psi	Part number:		
Test pressure hold:	3600.00	sec	Description:		
Work pressure:	10000.00	psi			
Work pressure hold:	900.00	sec	Fitting 2:	3.0 x 4-1/16 10K	
Length difference:	0.00	%	Part number:		
Length difference:	0.00	inch	Description:		
Visual check:			Length:	45	feet
Pressure test result:	PASS				
Length measurement result:					
Test operator:	Martin				

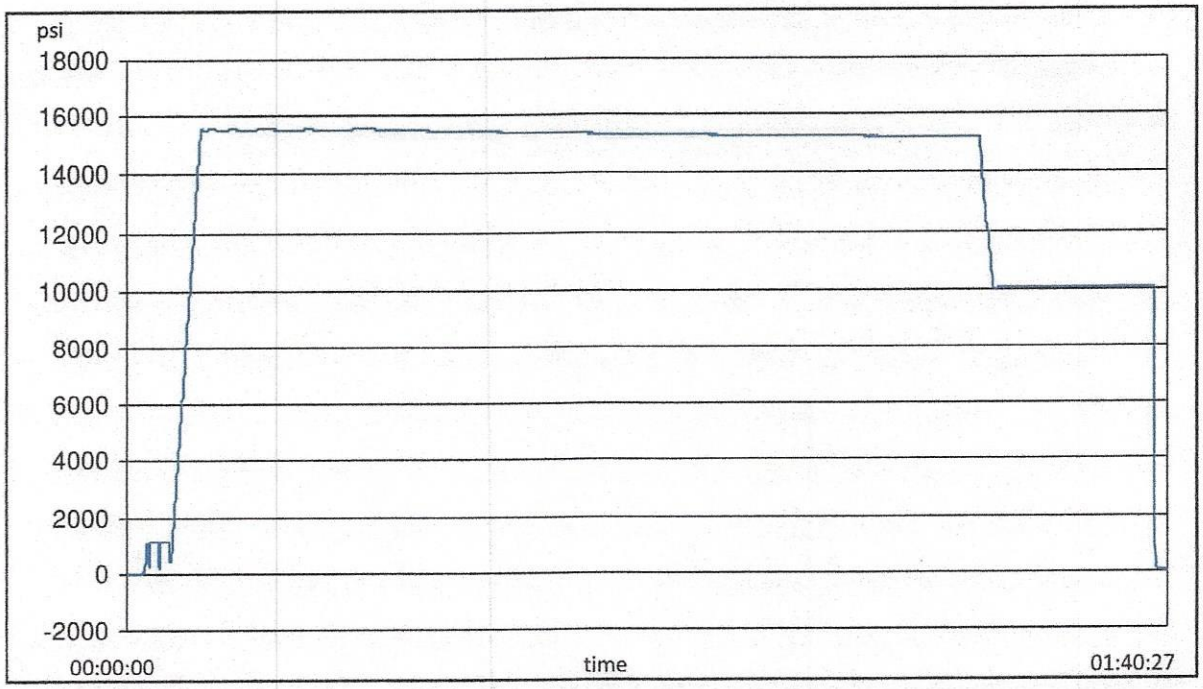

Filename: D:\Certificates\Report_101822-H3-101822-15.pdf

H3-10667

10/18/2022 11:48:25 AM

TEST REPORT

GAUGE TRACEABILITY

Description	Serial number	Calibration date	Calibration due date
S-25-A-W	110AMCL2	2022-01-10	2023-01-10
S-25-A-W	110APO2K	2022-01-10	2023-01-10

Comment

®

American Petroleum Institute

2018-151 | Digital

Certificate of Authority to use the Official API Monogram

License Number: 7K-0519 **ORIGINAL**

The American Petroleum Institute hereby grants to

GATES ENGINEERING AND SERVICES
7603 Prairie Oak Drive, Suite 190
Houston, TX
United States

the right to use the Official API Monogram® on manufactured products under the conditions in the official publications of the American Petroleum Institute entitled API Spec Q1® and **API-7K** and in accordance with the provisions of the License Agreement.

In all cases where the Official API Monogram is applied, the API Monogram shall be used in conjunction with this certificate number: **7K-0519**

The American Petroleum Institute reserves the right to revoke this authorization to use the Official API Monogram for any reason satisfactory to the Board of Directors of the American Petroleum Institute.

The scope of this license includes the following: High Pressure Mud and Cement Hoses at FSL 0, at FSL 1, at FSL 2

QMS Exclusions: Servicing

Effective Date: DECEMBER 18, 2021
Expiration Date: DECEMBER 18, 2024

Vice President of Product Management

To verify the authenticity of this license, go to www.api.org/compositelist.

®

American Petroleum Institute

2018-151 | Digital

Certificate of Authority to use the Official API Monogram

License Number: 16C-0485 **ORIGINAL**

The American Petroleum Institute hereby grants to

GATES ENGINEERING AND SERVICES
7603 Prairie Oak Drive, Suite 190
Houston, TX
United States

the right to use the Official API Monogram® on manufactured products under the conditions in the official publications of the American Petroleum Institute entitled API Spec Q1® and **API-16C** and in accordance with the provisions of the License Agreement.

In all cases where the Official API Monogram is applied, the API Monogram shall be used in conjunction with this certificate number: **16C-0485**

The American Petroleum Institute reserves the right to revoke this authorization to use the Official API Monogram for any reason satisfactory to the Board of Directors of the American Petroleum Institute.

The scope of this license includes the following: Flexible Choke and Kill Lines atFSL 0, FSL 1, FSL 2, FSL 3

QMS Exclusions: Servicing

Effective Date: DECEMBER 18, 2021
Expiration Date: DECEMBER 18, 2024

Vice President of Product Management

To verify the authenticity of this license, go to www.api.org/compositelist.

American Petroleum Institute

REGISTRATION NO. Q1-3650

Certificate of Registration

The American Petroleum Institute certifies that the quality management system of

GATES ENGINEERING AND SERVICES
7603 Prairie Oak Drive, Suite 190
Houston, TX
United States

has been assessed by the American Petroleum Institute and found to be in conformance with the following:

API Spec Q1, 9th Edition

The scope of this registration and the approved quality management system applies to the:

Assembly and Pressure Test of High Pressure Mud and Cement Hoses, Flexible Choke and Kill Lines, and General Rubber Hydraulic Hose Assemblies

API approves the organization's justification for excluding:

Servicing

API Spec Q1 Registered ®

Effective Date:	**DECEMBER 18, 2021**
Expiration Date:	**DECEMBER 18, 2024**
Registered Since:	**DECEMBER 18, 2018**

Vice President of Product Management

This certificate is valid for the period specified herein. The registered organization must continually meet all requirements of API Spec Q1, *Specification for Quality Management System Requirements for Manufacturing Organizations for the Petroleum and Natural Gas Industry,* and the requirements of the Registration Agreement. Registration is maintained and regularly monitored through annual full system audits. This certificate has been issued from API offices located at 200 Massachusetts Avenue, NW Suite 1100, Washington, DC 20001-5571, U.S.A. It is the property of API, and must be returned upon request. **To verify the authenticity of this certificate, go to www.api.org/compositelist.**

2021-164 | 10.21 | Digital

10,000 PSI BOP Annular
Variance Request (EOG Variance 1c)

EOG Resources request a variance to use a 5000 psi annular BOP with a 10,000 psi BOP stack. The component and compatibility tables along with the general well control plans demonstrate how the 5000 psi annular BOP will be protected from pressures that exceed its rated working pressure (RWP). The pressure at which the control of the wellbore is transferred from the annular preventer to another available preventer will not exceed 3500 psi (70% of the RWP of the 5000 psi annular BOP).

1. Component and Preventer Compatibility Tables

The tables below outlines the tubulars and the compatible preventers in use. This table, combined with the drilling fluid, documents that two barriers to flow will be maintained at all times.

12-1/4" Intermediate Hole Section 10M psi requirement					
Component	**OD**	**Primary Preventer**	**RWP**	**Alternate Preventer(s)**	**RWP**
Drillpipe	5.000" or 4.500"	Annular	5M	Upper 3.5 - 5.5" VBR Lower 3.5 - 5.5" VBR	10M 10M
HWDP	5.000" or 4.500"	Annular	5M	Upper 3.5 - 5.5" VBR Lower 3.5 - 5.5" VBR	10M 10M
Jars	6.500"	Annular	5M	Upper 3.5 - 5.5" VBR Lower 3.5 - 5.5" VBR	10M 10M
DCs and MWD tools	6.500" – 8.000"	Annular	5M	-	-
Mud Motor	8.000" – 9.625"	Annular	5M	-	-
1st Intermediate casing	9.625"	Annular	5M	-	-
Open-hole	-	Blind Rams	10M	-	-

8-3/4" Production Hole Section 10M psi requirement					
Component	**OD**	**Primary Preventer**	**RWP**	**Alternate Preventer(s)**	**RWP**
Drillpipe	5.000" or 4.500"	Annular	5M	Upper 3.5 - 5.5" VBR Lower 3.5 - 5.5" VBR	10M 10M
HWDP	5.000" or 4.500"	Annular	5M	Upper 3.5 - 5.5" VBR Lower 3.5 - 5.5" VBR	10M 10M
Jars	6.500"	Annular	5M	Upper 3.5 - 5.5" VBR Lower 3.5 - 5.5" VBR	10M 10M
DCs and MWD tools	6.500" – 8.000"	Annular	5M	-	-
Mud Motor	6.750" – 8.000"	Annular	5M	-	-
2nd Intermediate casing	7.625"	Annular	5M	-	-
Open-hole	-	Blind Rams	10M	-	-

VBR = Variable Bore Ram

EOG Resources
13-5/8” 10M PSI BOP Stack

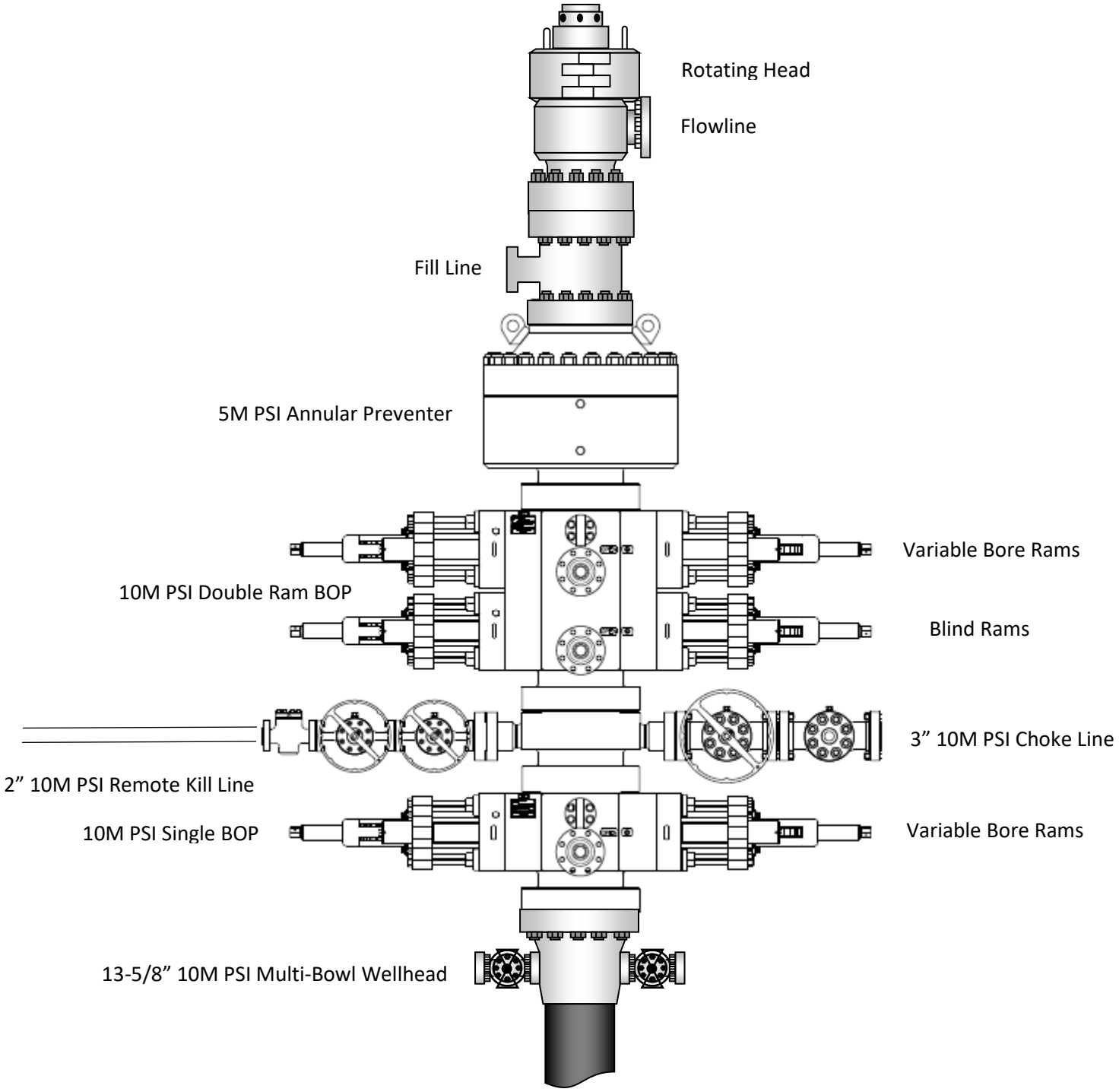

2. Well Control Procedures

Below are the minimal high-level tasks prescribed to assure a proper shut-in while drilling, tripping, running casing, pipe out of the hole (open hole), and moving the BHA through the BOPs. At least one well control drill will be performed weekly per crew to demonstrate compliance with the procedure and well control plan. The well control drill will be recorded in the daily drilling log. The type of drill will be determined by the ongoing operations, but reasonable attempts will be made to vary the type of drill conducted (pit, trip, open hole, choke, etc.). This well control plan will be available for review by rig personnel in the EOG Resources drilling supervisor's office on location, and on the rig floor. All BOP equipment will be tested as per Onshore O&G Order No. 2 with the exception of the 5000 psi annular which will be tested to 100% of its RWP.

General Procedure While Drilling

1. Sound alarm (alert crew)
2. Space out drill string
3. Shut down pumps (stop pumps and rotary)
4. Shut-in Well (uppermost applicable BOP, typically annular preventer first. HCR and choke will already be in the closed position.)
5. Confirm shut-in
6. Notify toolpusher/company representative
7. Read and record the following:
    a. SIDPP and SICP
    b. Pit gain
    c. Time
8. Regroup and identify forward plan
9. If pressure has built or is anticipated during the kill to reach 70% or greater of the RWP of the annular preventer, confirm spacing and close the upper variable bore rams.

General Procedure While Tripping

1. Sound alarm (alert crew)
2. Stab full opening safety valve and close
3. Space out drill string
4. Shut-in (uppermost applicable BOP, typically annular preventer first. HCR and choke will already be in the closed position.)
5. Confirm shut-in
6. Notify toolpusher/company representative
7. Read and record the following:
    a. SIDPP and SICP
    b. Pit gain
    c. Time
8. Regroup and identify forward plan
9. If pressure has built or is anticipated during the kill to reach 70% or greater of the RWP of the annular preventer, confirm spacing and close the upper variable bore rams.

General Procedure While Running Production Casing

1. Sound alarm (alert crew)
2. Stab crossover and full opening safety valve and close
3. Space out string
4. Shut-in (uppermost applicable BOP, typically annular preventer first. HCR and choke will already be in the closed position.)
5. Confirm shut-in
6. Notify toolpusher/company representative
7. Read and record the following:
    a. SIDPP and SICP
    b. Pit gain
    c. Time
8. Regroup and identify forward plan
9. If pressure has built or is anticipated during the kill to reach 70% or greater of the RWP of the annular preventer, confirm spacing and close the upper variable bore rams.

General Procedure With No Pipe In Hole (Open Hole)

1. Sound alarm (alert crew)
2. Shut-in with blind rams. (HCR and choke will already be in the closed position.)
3. Confirm shut-in
4. Notify toolpusher/company representative
5. Read and record the following:
    a. SICP
    b. Pit gain
    c. Time
6. Regroup and identify forward plan

General Procedures While Pulling BHA thru Stack

1. PRIOR to pulling last joint of drillpipe thru the stack.
    a. Perform flowcheck, if flowing:
    b. Sound alarm (alert crew)
    c. Stab full opening safety valve and close
    d. Space out drill string with tool joint just beneath the upper variable bore rams.
    e. Shut-in using upper variable bore rams. (HCR and choke will already be in the closed position.)
    f. Confirm shut-in
    g. Notify toolpusher/company representative
    h. Read and record the following:
        i. SIDPP and SICP
        ii. Pit gain
        iii. Time
    i. Regroup and identify forward plan

2. With BHA in the stack and compatible ram preventer and pipe combo immediately available.
    a. Sound alarm (alert crew)
    b. Stab crossover and full opening safety valve and close
    c. Space out drill string with upset just beneath the upper variable bore rams.
    d. Shut-in using upper variable bore rams. (HCR and choke will already be in the closed position.)
    e. Confirm shut-in
    f. Notify toolpusher/company representative
    g. Read and record the following:
        i. SIDPP and SICP
        ii. Pit gain
        iii. Time
    h. Regroup and identify forward plan

3. With BHA in the stack and NO compatible ram preventer and pipe combo immediately available.
    a. Sound alarm (alert crew)
    b. If possible to pick up high enough, pull string clear of the stack and follow “Open Hole” scenario.
    c. If impossible to pick up high enough to pull the string clear of the stack:
    d. Stab crossover, make up one joint/stand of drillpipe, and full opening safety valve and close
    e. Space out drill string with tooljoint just beneath the upper variable bore ram.
    f. Shut-in using upper variable bore ram. (HCR and choke will already be in the closed position.)
    g. Confirm shut-in
    h. Notify toolpusher/company representative
    i. Read and record the following:
        i. SIDPP and SICP
        ii. Pit gain
        iii. Time
    j. Regroup and identify forward plan

Break-test BOP & Offline Cementing:

EOG Resources Inc. (EOG) respectfully requests a variance from the minimum standards for well control equipment testing of ECFR Title 43 Part 3172.6(b)(9)(iv) to allow a testing schedule of the blow out preventer (BOP) and blow out prevention equipment (BOPE) along with Batch Drilling & Offline cement operations to include the following:

- Full BOPE test at first installation on the pad.
- Full BOPE test every 21 days.
- This test will be conducted for 5M rated hole intervals only.
- Each rig requesting the break-test variance is capable of picking up the BOP without damaging components using winches, following API Standard 53, Well Control Equipment Systems for Drilling Wells (Fifth edition, December 2018, Annex C. Table C.4) which recognizes break testing as an acceptable practice.
- Function tests will be performed on the following BOP elements:
    - Annular à during each full BOPE test
    - Upper Pipe Rams à On trip ins where FIT required
    - Blind Rams à Every trip
    - Lower Pipe Rams à during each full BOPE test
- Break testing BOP and BOPE coupled with batch drilling operations and option to offline cement and/or remediate (if needed) any surface or intermediate sections, according to attached offline cementing support documentation.
- After the well section is secured, the BOP will be disconnected from the wellhead and walked with the rig to another well on the pad.
- TA cap will also be installed per Wellhead vendor procedure and pressure inside the casing will be monitored via the valve on the TA cap as per standard batch drilling ops.

Break Test Diagram (HCR valve)

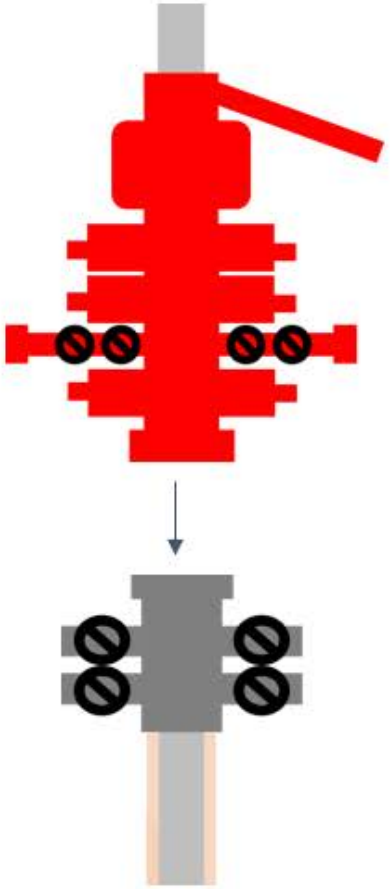

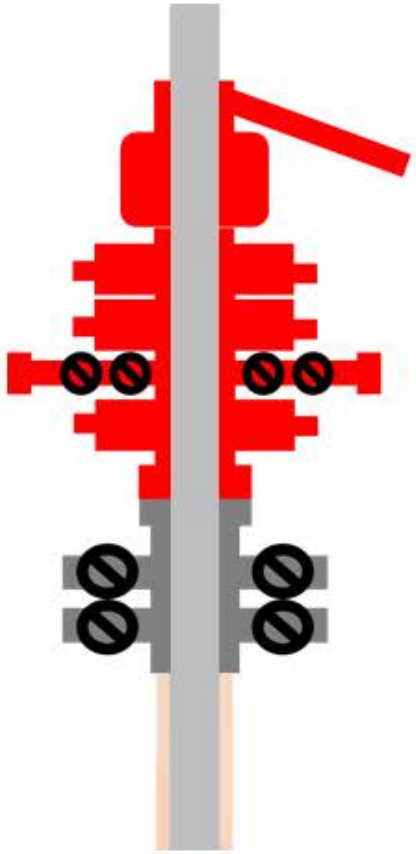

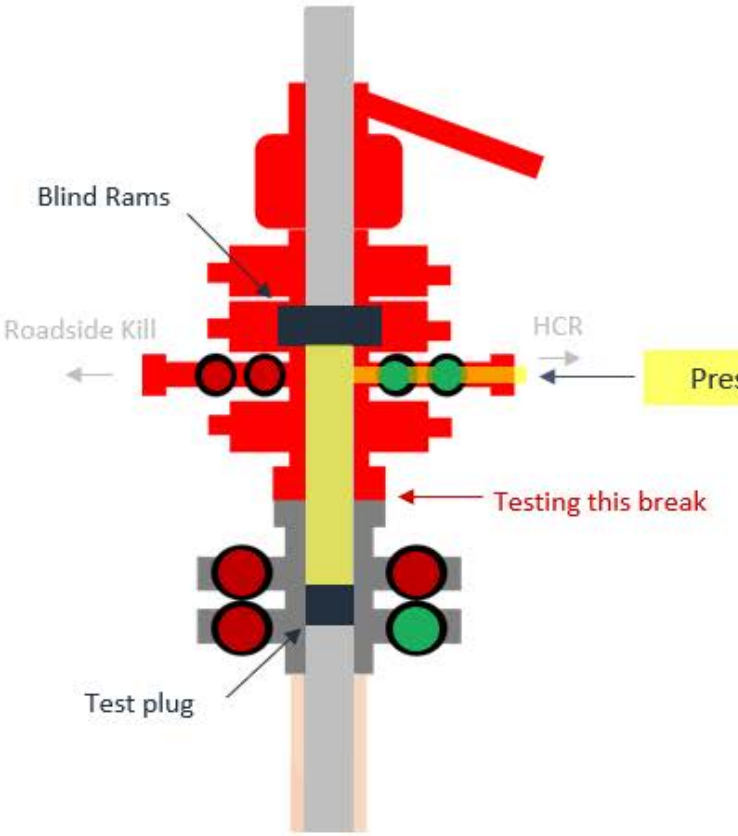

Steps

1. Set plug in wellhead (lower barrier)
2. Close Blind Rams (upper barrier)
3. Close roadside kill
4. Open HCR (pressure application)
5. Open wellhead valves below test plug to ensure if leak past test plug, pressure won't be applied to wellbore
6. Tie BOP testers high pressure line to main choke manifold crown valve
7. Pressure up to test break
8. Bleed test pressure from BOP testing unit

Break Test Diagram (Test Joint)

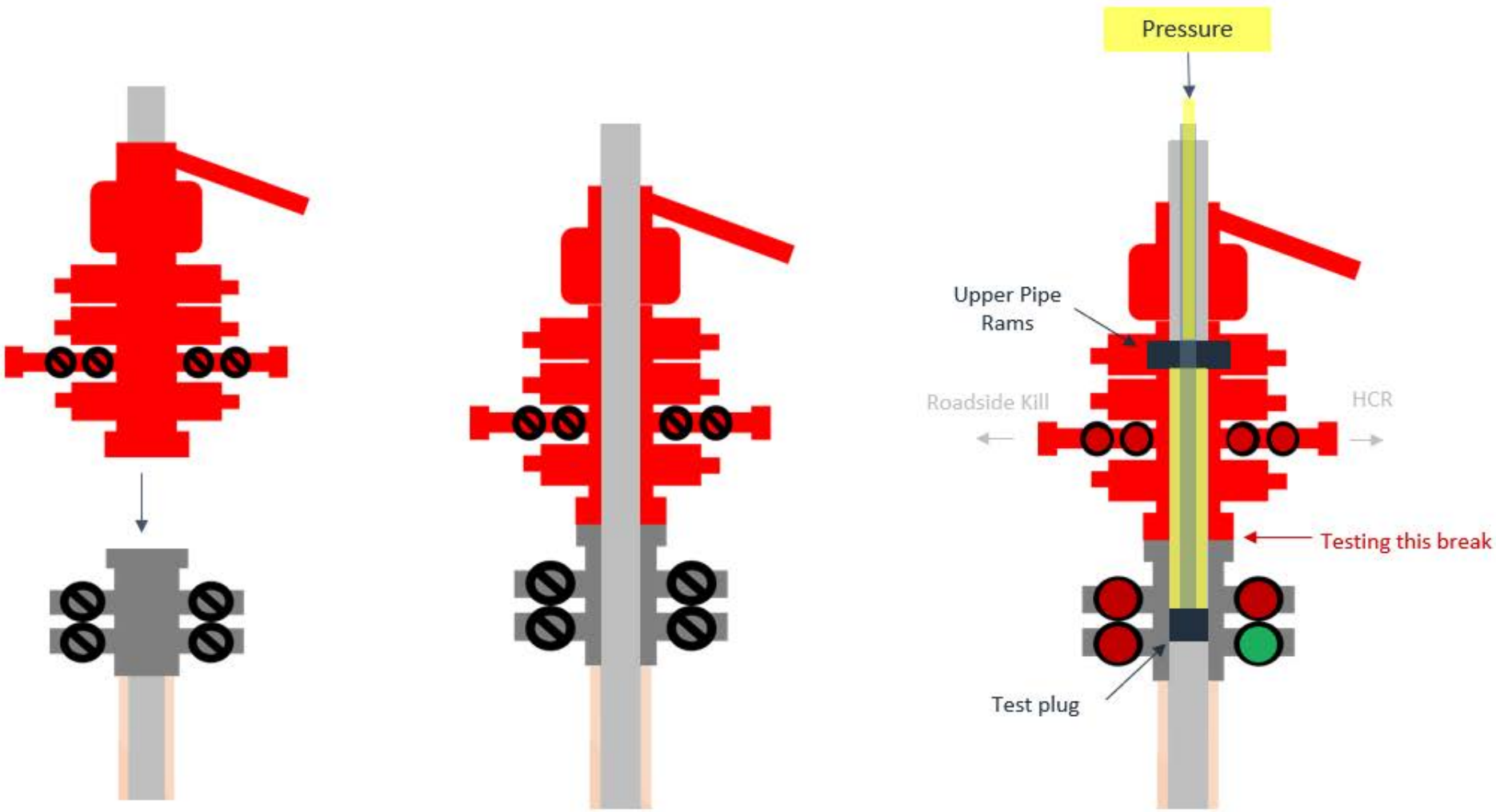

Steps

1. Set plug in with test joint wellhead (lower barrier)
2. Close Upper Pipe Rams (upper barrier)
3. Close roadside kill
4. Close HCR
5. Open wellhead valves below test plug to ensure if leak past test plug, pressure won't be applied to wellbore
6. Tie BOP testers high pressure line to top of test joint
7. Pressure up to test break
8. Bleed test pressure from BOP testing unit

Cement Program

1. No changes to the cement program will take place for offline cementing.

Summarized Operational Procedure for Intermediate Casing

1. Run casing as per normal operations. While running casing, conduct negative pressure test and confirm integrity of the float equipment back pressure valves.
    a. Float equipment is equipped with two back pressure valves rated to a minimum of 5,000 psi.
2. Land production casing on mandrel hanger through BOP.
    a. If casing is unable to be landed with a mandrel hanger, then the **casing will be cemented online**.
3. Break circulation and confirm no restrictions.
    a. Ensure no blockage of float equipment and appropriate annular returns.
    b. Perform flow check to confirm well is static.
4. Set pack-off
    a. If utilizing a fluted/ported mandrel hanger, ensure well is static on the annulus and inside the casing by filling the pipe with kill weight fluid, remove landing joint, and set annular packoff through BOP. Pressure test to 5,000 psi for 10 min.
    b. If utilizing a solid mandrel hanger, ensure well is static on the annulus and inside the casing by filling the pipe with kill weight fluid. Pressure test seals to 5,000 psi for 10 min. Remove landing joint through BOP.
5. After confirmation of both annular barriers and the two casing barriers, install TA plug and pressure test to 5,000 psi for 10 min. Notify the BLM with intent to proceed with nipple down and offline cementing.
    a. Minimum 4 hrs notice.
6. With the well secured and BLM notified, nipple down BOP and secure on hydraulic carrier or cradle.
    a. Note, if any of the barriers fail to test, the BOP stack will not be nippled down until after the cement job has concluded and both lead and tail slurry have reached 500 psi.
7. Skid/Walk rig off current well.
8. Confirm well is static before removing TA Plug.
    a. Cementing operations will not proceed until well is under control. (If well is not static, notify BLM and proceed to kill)
    b. Casing outlet valves will provide access to both the casing ID and annulus. Rig or third party pump truck will kill well prior to cementing.
    c. Well control plan can be seen in Section B, Well Control Procedures.
    d. If need be, rig can be moved back over well and BOP nippled back up for any further remediation.

   e. Diagram for rig positioning relative to offline cementing can be seen in Figure 4.
9. Rig up return lines to take returns from wellhead to pits and rig choke.
   a. Test all connections and lines from wellhead to choke manifold to 5,000 psi high for 10 min.
   b. If either test fails, perform corrections and retest before proceeding.
   c. Return line schematics can be seen in Figure 3.
10. Remove TA Plug from the casing.
11. Install offline cement tool.
   a. Current offline cement tool schematics can be seen in Figure 1 (Cameron) and Figure 2 (Cactus).
12. Rig up cement head and cementing lines.
   a. Pressure test cement lines against cement head to 80% of casing burst for 10 min.
13. Break circulation on well to confirm no restrictions.
   a. If gas is present on circulation, well will be shut in and returns rerouted through gas buster.
   b. Max anticipated time before circulating with cement truck is 6 hrs.
14. Pump cement job as per plan.
   a. At plug bump, test casing to 0.22 psi/ft or 1500 psi, whichever is greater.
   b. If plug does not bump on calculated, shut down and wait 8 hrs or 500 psi compressive strength, whichever is greater before testing casing.
15. Confirm well is static and floats are holding after cement job.
   a. With floats holding and backside static:
      i. Remove cement head.
   b. If floats are leaking:
      i. Shut-in well and WOC (Wait on Cement) until tail slurry reaches 500 psi compressive strength and the casing is static prior to removing cement head.
   c. If there is flow on the backside:
      i. Shut in well and WOC until tail slurry reaches 500 psi compressive strength. Ensure that the casing is static prior to removing cement head.
16. Remove offline cement tool.
17. Install night cap with pressure gauge for monitoring.
18. Test night cap to 5,000 psi for 10 min.

Example Well Control Plan Content

A. Well Control Component Table

The table below, which covers the cementing of the **5M MASP (Maximum Allowable Surface Pressure) portion of the well**, outlines the well control component rating in use. This table, combined with the mud program, documents that two barriers to flow can be maintained at all times, independent of the BOP nippled up to the wellhead.

Intermediate hole section, 5M requirement

Component	RWP
Pack-off	10M
Casing Wellhead Valves	10M
Annular Wellhead Valves	5M
TA Plug	10M
Float Valves	5M
2” 1502 Lo-Torque Valves	15M

B. Well Control Procedures

Well control procedures are specific to the rig equipment and the operation at the time the kick occurs. Below are the minimal high-level tasks prescribed to assure a proper shut-in while circulating and cementing through the Offline Cement Adapter.

General Procedure While Circulating

1. Sound alarm (alert crew).
2. Shut down pumps.
3. Shut-in Well (close valves to rig pits and open valve to rig choke line. Rig choke will already be in the closed position).
4. Confirm shut-in.
5. Notify tool pusher/company representative.

6. Read and record the following:
    a. SICP (Shut in Casing Pressure) and AP (Annular Pressure)
    b. Pit gain
    c. Time
    d. Regroup and identify forward plan to continue circulating out kick via rig choke and mud/gas separator. Circulate and adjust mud density as needed to control well.

General Procedure While Cementing

1. Sound alarm (alert crew).
2. Shut down pumps.
3. Shut-in Well (close valves to rig pits and open valve to rig choke line. Rig choke will already be in the closed position).
4. Confirm shut-in.
5. Notify tool pusher/company representative.
6. Open rig choke and begin pumping again taking returns through choke manifold and mud/gas separator.
7. Continue to place cement until plug bumps.
8. At plug bump close rig choke and cement head.
9. Read and record the following
    a. SICP and AP
    b. Pit gain
    c. Time
    d. Shut-in annulus valves on wellhead

General Procedure After Cementing

1. Sound alarm (alert crew).
2. Shut-in Well (close valves to rig pits and open valve to rig choke line. Rig choke will already be in the closed position).
3. Confirm shut-in.
4. Notify tool pusher/company representative.
5. Read and record the following:
    a. SICP and AP
    b. Pit gain
    c. Time
    d. Shut-in annulus valves on wellhead

Figure 1: Cameron TA Plug and Offline Adapter Schematic

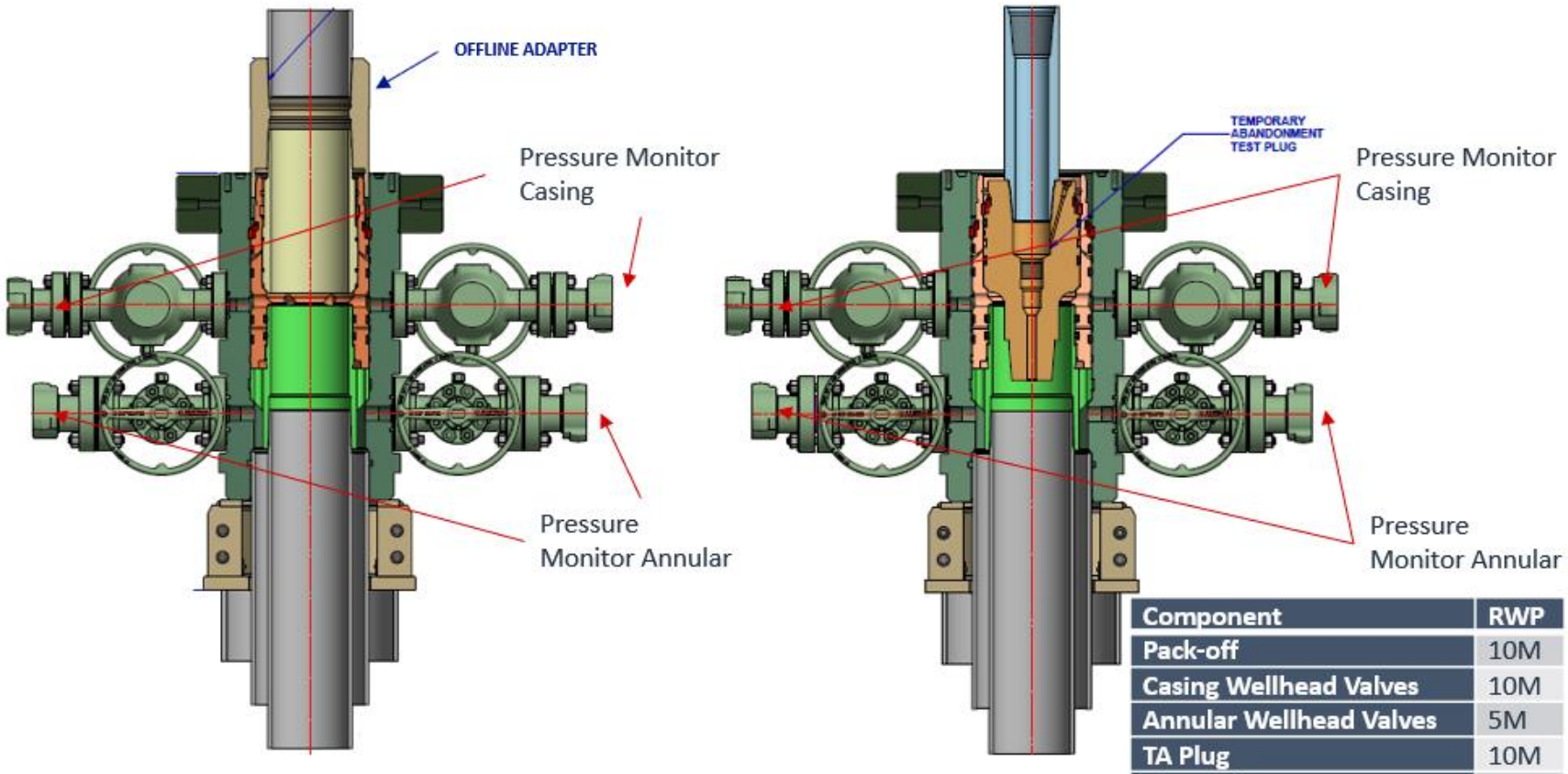

Component	RWP
Pack-off	10M
Casing Wellhead Valves	10M
Annular Wellhead Valves	5M
TA Plug	10M
Float Valves	5M
2" 1502 Lo-Torque Valves	15M

Figure 2: Cactus TA Plug and Offline Adapter Schematic

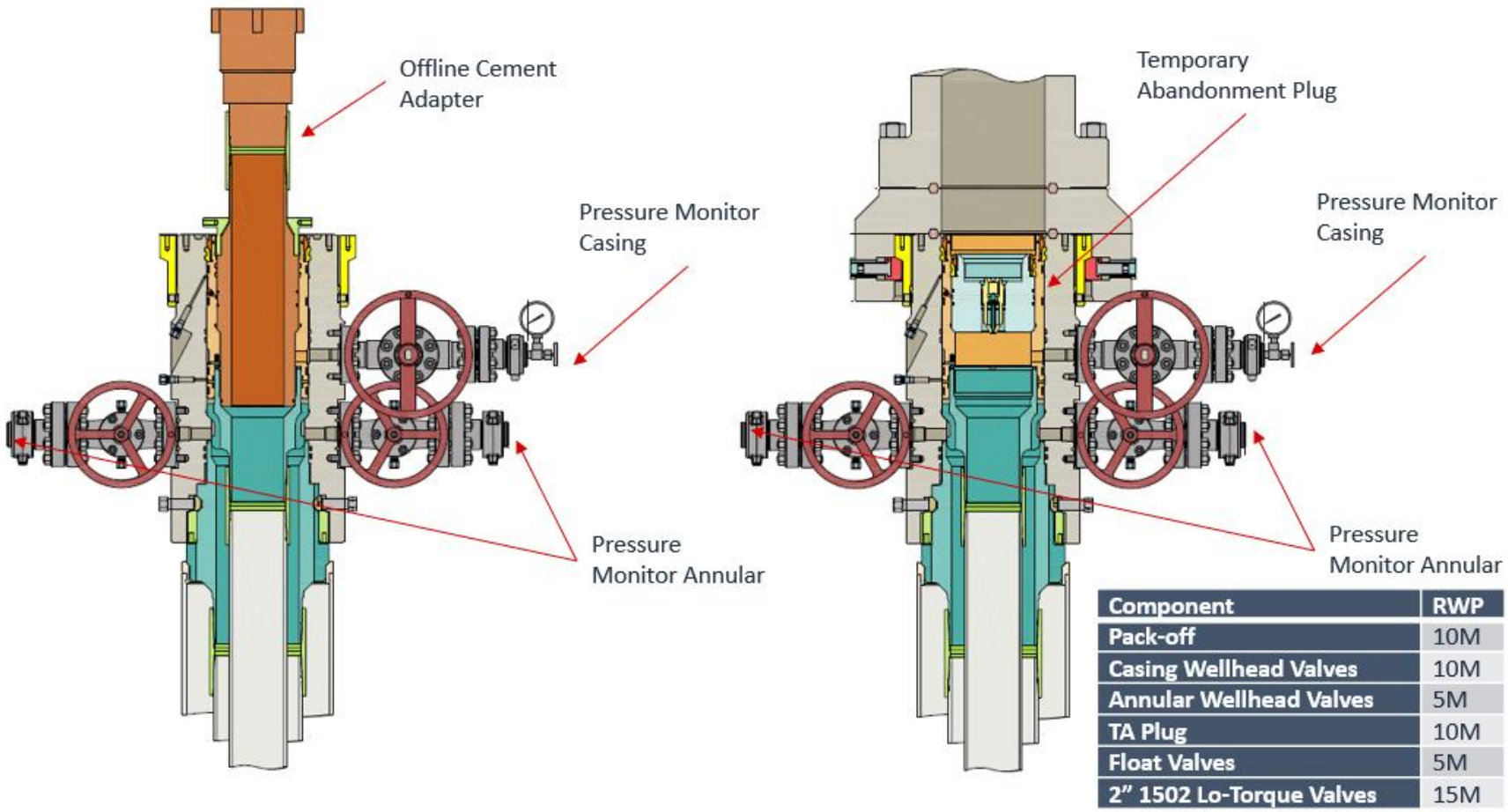

Component	RWP
Pack-off	10M
Casing Wellhead Valves	10M
Annular Wellhead Valves	5M
TA Plug	10M
Float Valves	5M
2" 1502 Lo-Torque Valves	15M

Figure 3: Back Yard Rig Up

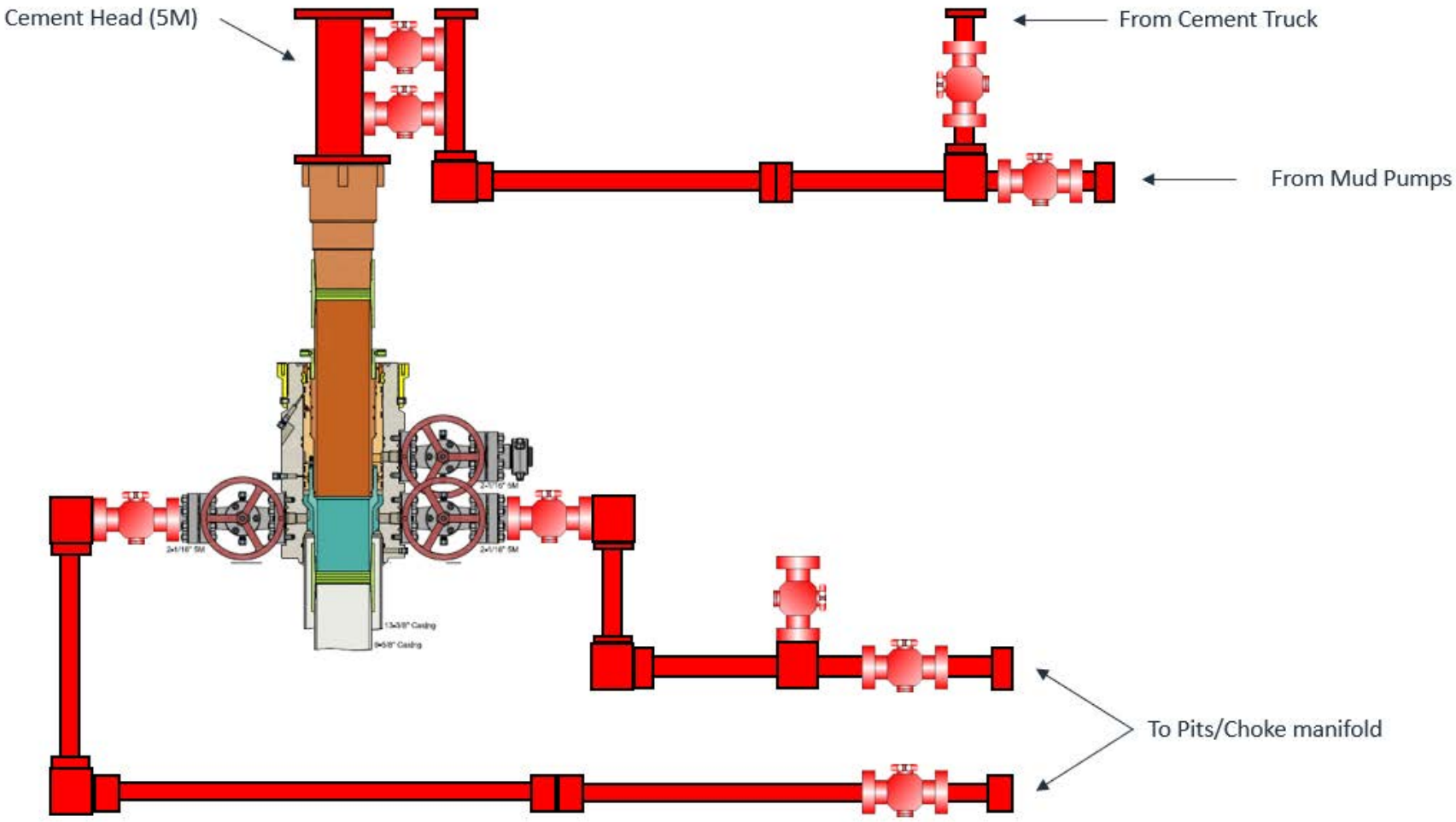

*** All Lines 10M rated working pressure

Figure 4: Rig Placement Diagram

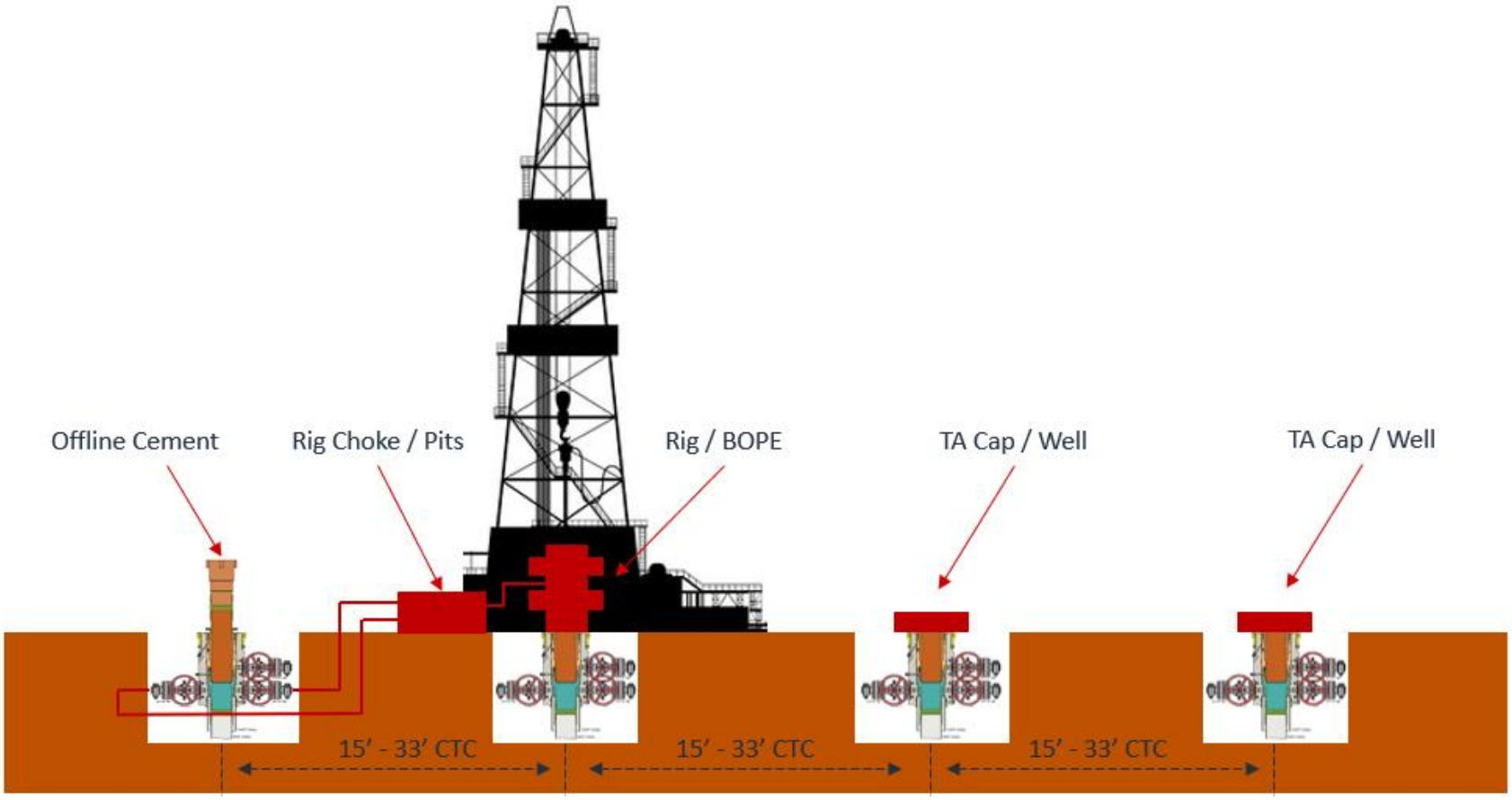

eog resources

Shallow Target Offline Bradenhead:
EOG Resources Inc. (EOG) respectfully requests a variance from the minimum standards to allow for offline bradenhead cementing of the production string after primary cementing operations have been completed. The primary cement job will be pumped conventionally (online) to top of the Brushy Canyon and will cover the target production intervals, and after production pack-off is set and tested, bradenhead will be pumped through casing valves between the production and intermediate casings (offline). For the bradenhead stage of production cementing, the barriers remain the same for offline cementing compared to performing it online.

The bradenhead will be the primary option for production cementing. EOG also requests to have the conventional option in place to accommodate for logistical or wellbore conditions. The tie back requirements will be met if the cement is pumped conventionally, and cement volumes will be adjusted accordingly. TOC will be verified by CBL.

eog resources

Salt Section Annular Clearance Variance Request

Daniel Moose

Current Design (Salt Strings)

0.422” Annular clearance requirement

- Casing collars shall have a minimum clearance of 0.422 inches on all sides in the hole/casing annulus, with recognition that variances can be granted for justified exceptions.

- 12.25” Hole x 9.625”40# J55/HCK55 LTC Casing
  - 1.3125” Clearance to casing OD
  - 0.8125” Clearance to coupling OD
- 9.875” Hole x 8.75” 38.5# P110 Sprint-SF Casing
  - 0.5625” Clearance to casing OD
  - 0.433” Clearance to coupling OD

Annular Clearance Variance Request

EOG request permission to allow deviation from the 0.422" annulus clearance requirement for the intermediate (salt) section from Onshore Order #2 under the following conditions:

- The variance is not applicable within the Potash Boundaries or Capitan Reef areas.
- Operator takes responsibility to get casing to set point in the event that the clearance causes stuck pipe issues

Volumetric Hole Size Calculation

Hole Size Calculations Off Cement Volumes

- Known volume of cement pumped
- Known volume of cement returned to surface
- Must not have had any losses
- Must have bumped plug

Average Hole Size

- 12.25” Hole
  - 12.88” Hole
    - 5.13% diameter increase
    - 10.52% area increase
  - 0.63” Average enlargement
  - 0.58” Median enlargement
  - 179 Well Count
- 9.875” Hole
  - 10.30” Hole
    - 4.24% diameter increase
    - 9.64% area increase
  - 0.42” Average enlargement
  - 0.46” Median enlargement
  - 11 Well Count

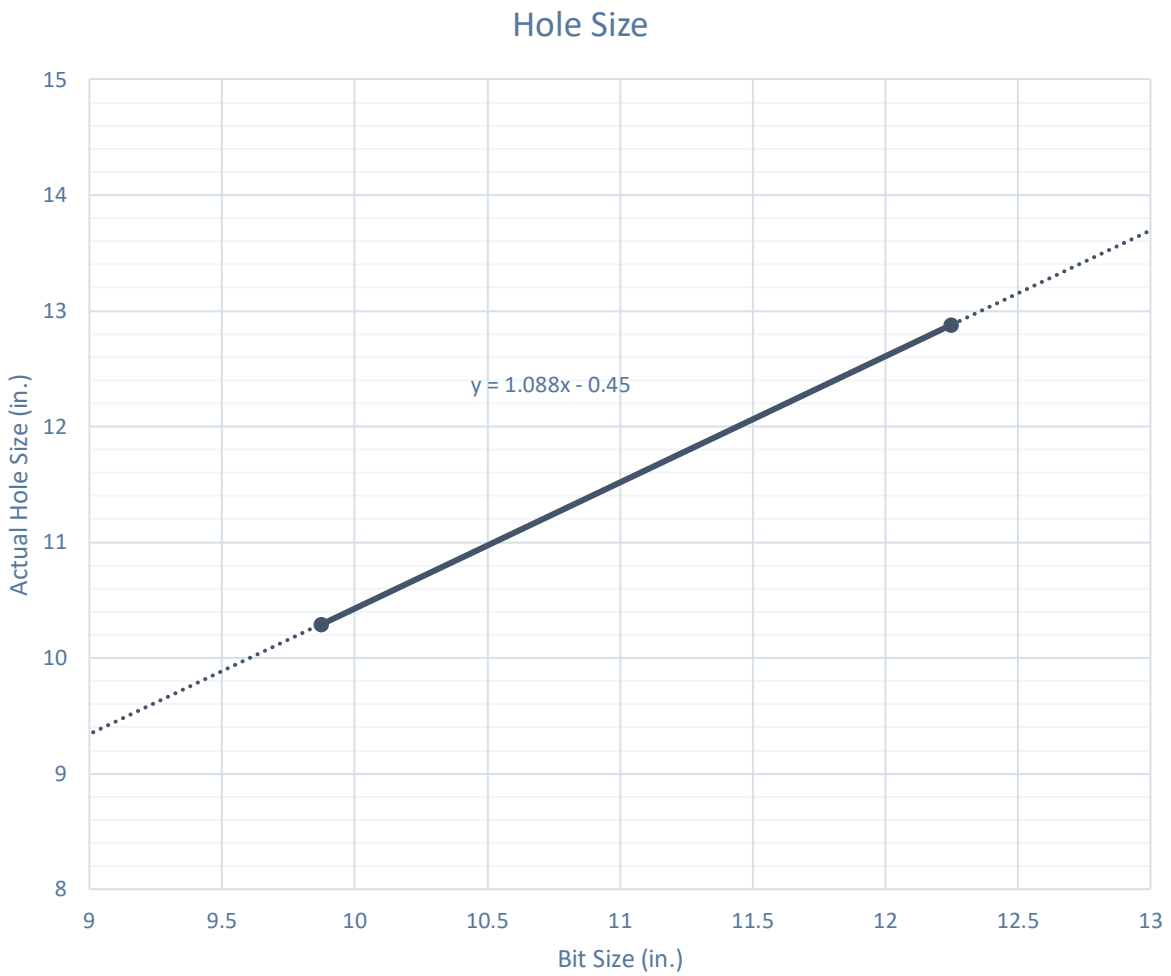

Caliper Hole Size (12.25”)

Average Hole Size

- 12.25” Bit
  - 12.76” Hole
    - 4.14% diameter increase
    - 8.44% area increase
  - 0.51” Average enlargement
  - 0.52” Median enlargement
  - Brine

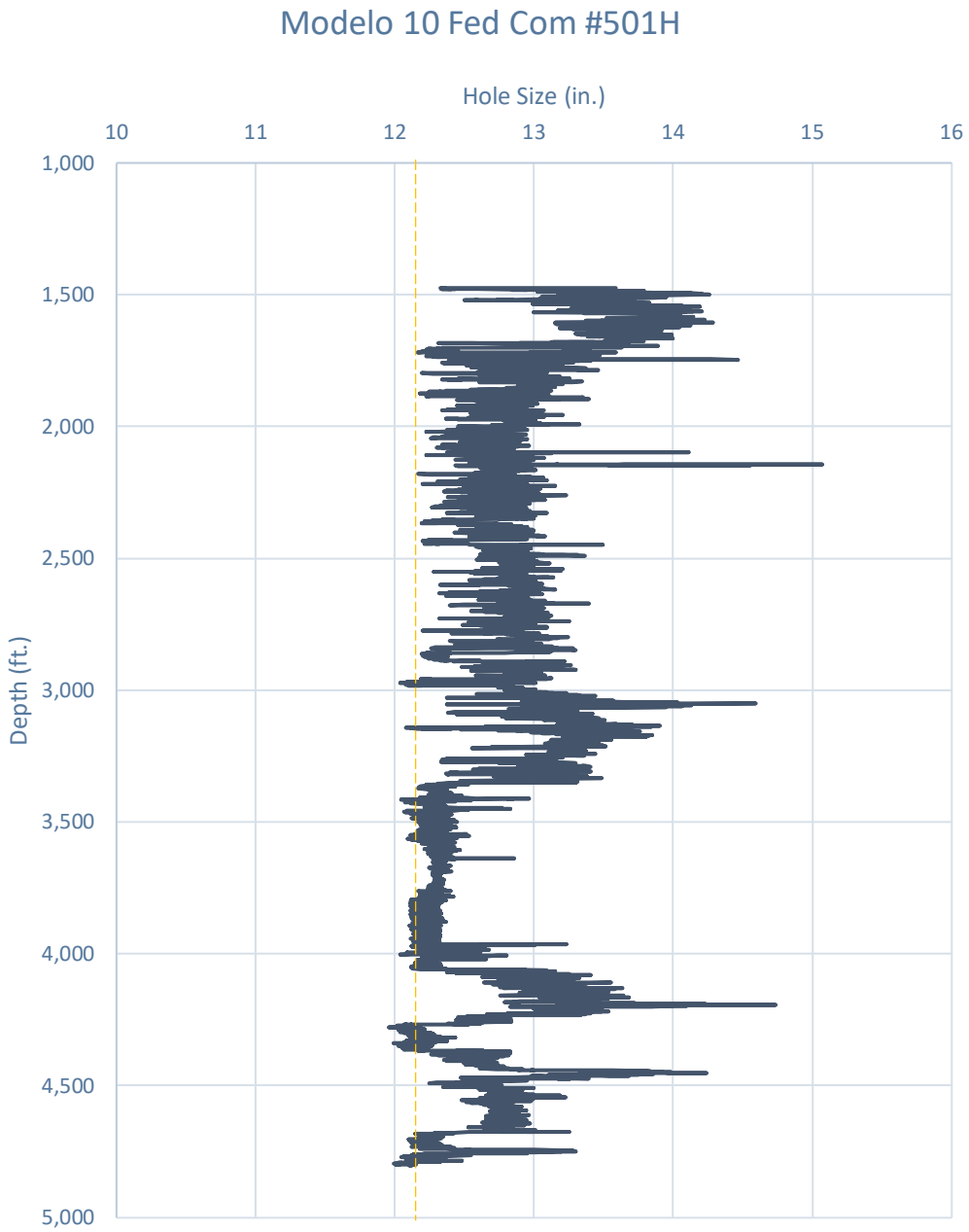

Caliper Hole Size (9.875”)

Average Hole Size

- 9.875” Hole
  - 11.21” Hole
    - 13.54% diameter increase
    - 28.92% area increase
  - 1.33” Average enlargement
  - 1.30” Median enlargement
  - EnerLite

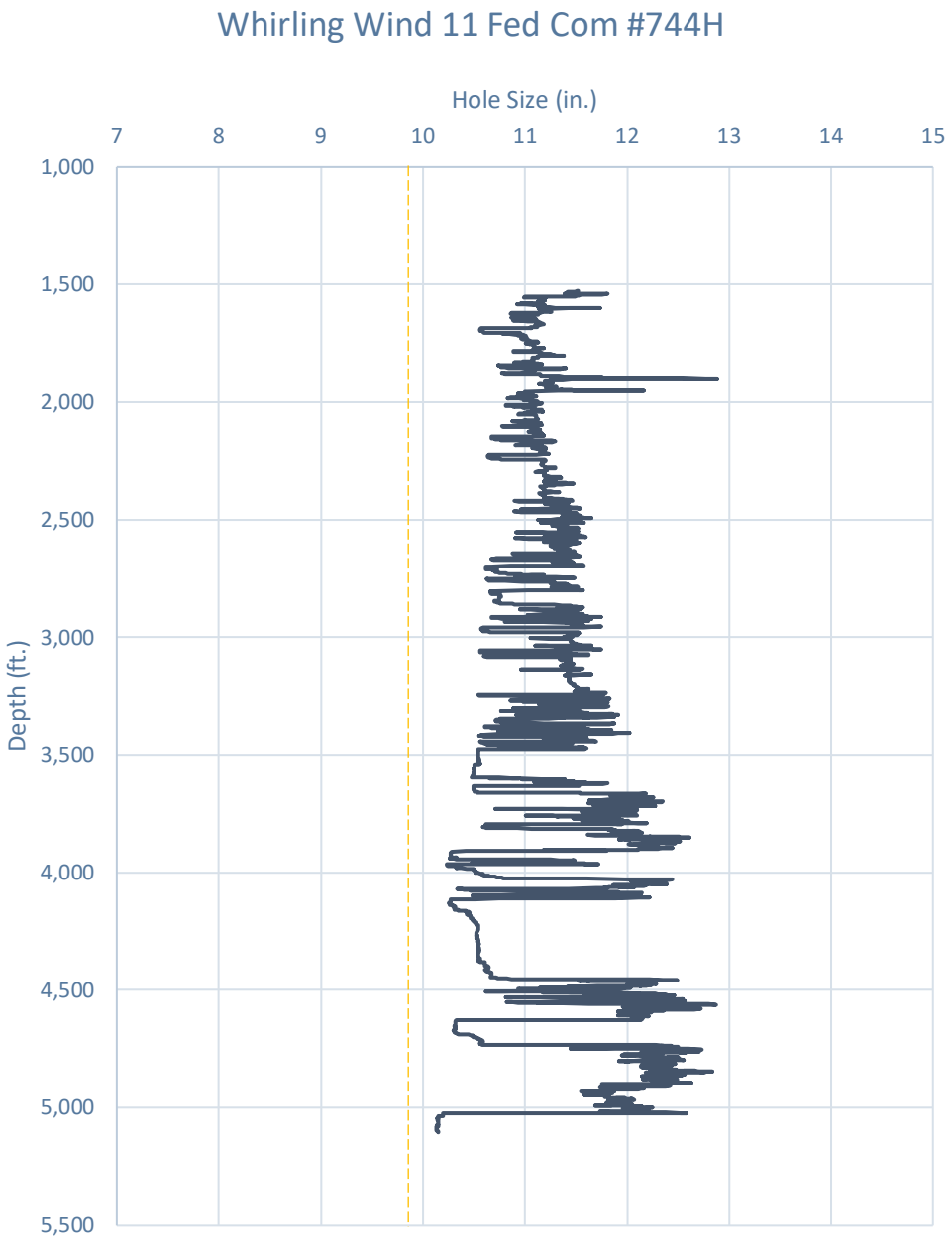

Design A

Proposed 11” Hole with 9.625” 40# J55/HCK55 LTC Casing

- 11” Bit + 0.52” Average hole enlargement = 11.52” Hole Size
  - 0.9475” Clearance to casing OD

    $$= \frac{11.52 - 9.625}{2}$$
  - 0.4475” Clearance to coupling OD

    $$= \frac{11.52 - 10.625}{2}$$
- Previous Shoe – 13.375” 54.5# J55 STC
  - 0.995” Clearance to coupling OD (~1,200’ overlap)

    $$= \frac{12.615 - 10.625}{2}$$

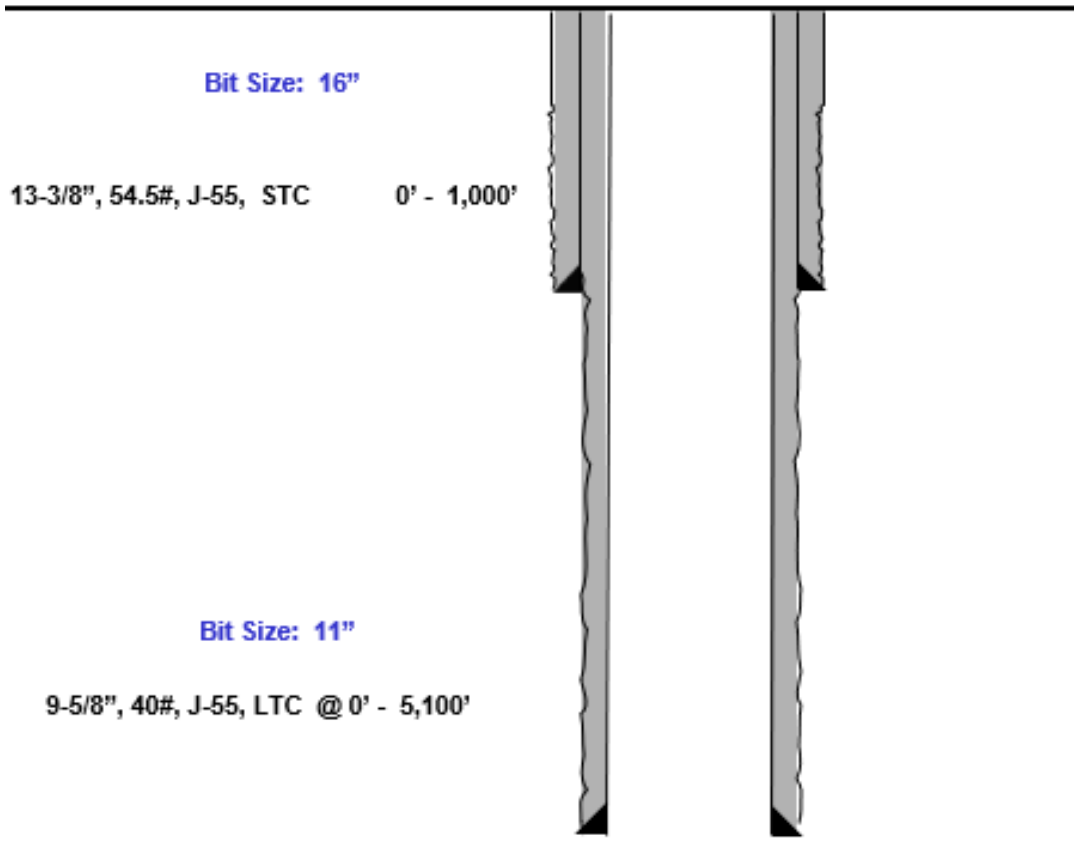

Design B

Proposed 9.875” Hole with 8.625” 32# J55/P110 BTC-SC Casing

- 9.875” Bit + 0.42” Average hole enlargement = 10.295” Hole Size
  - 0.835” Clearance to casing OD

    $$= \frac{10.295 - 8.625}{2}$$
  - 0.585” Clearance to coupling OD

    $$= \frac{10.295 - 9.125}{2}$$
- Previous Shoe – 10.75” 40.5# J55 STC
  - 0.4625” Clearance to coupling OD (~1,200’ overlap)

    $$= \frac{10.05 - 9.125}{2}$$

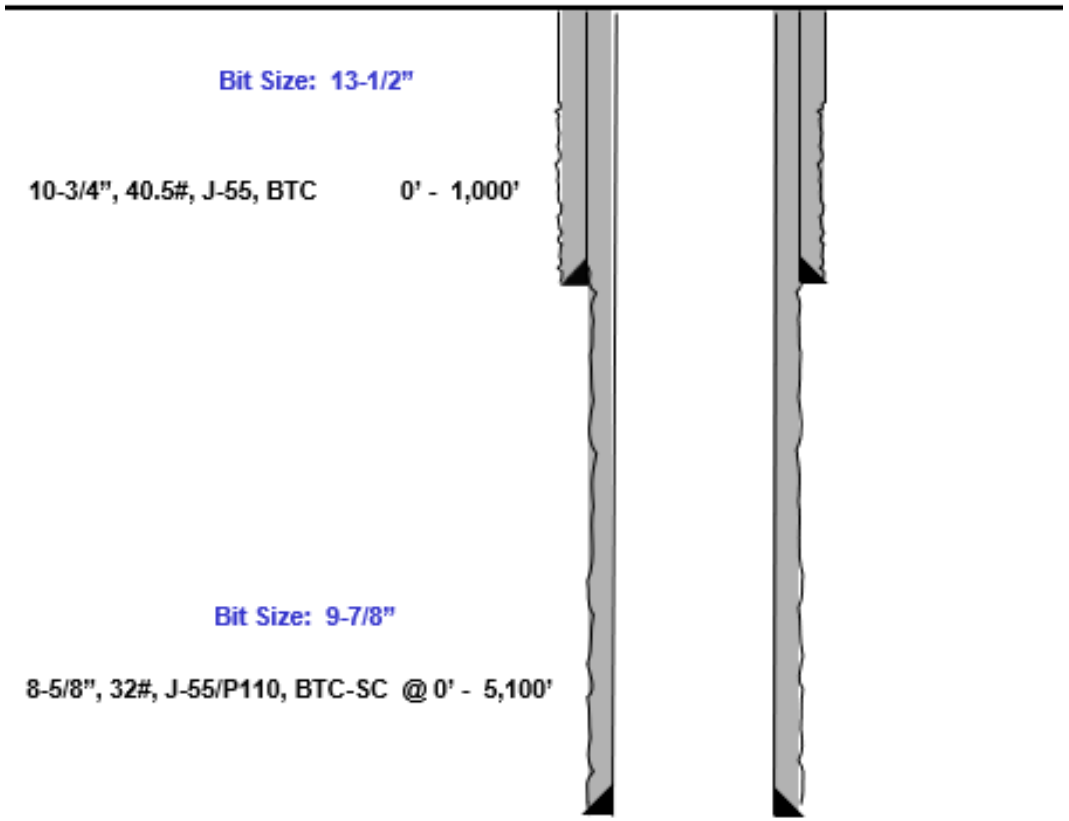

eog resources

Index

Casing Spec Sheets

PERFORMANCE DATA

API LTC 9.625 in 40.00 lbs/ft K55 HC

Technical Data Sheet

Tubular Parameters

Size	9.625	in	Minimum Yield	55	ksi
Nominal Weight	40.00	lbs/ft	Minimum Tensile	95	ksi
Grade	K55 HC		Yield Load	629	kips
PE Weight	38.94	lbs/ft	Tensile Load	1088	kips
Wall Thickness	0.395	in	Min. Internal Yield Pressure	3,950	psi
Nominal ID	8.835	in	Collapse Pressure	3600	psi
Drift Diameter	8.750	in			
Nom. Pipe Body Area	11.454	in²			

Connection Parameters

Connection OD	10.625	in
Coupling Length	10.500	in
Threads Per Inch	8	tpi
Standoff Thread Turns	3.50	turns
Make-Up Loss	4.750	in
Min. Internal Yield Pressure	3,950	psi

Pipe Body and API Connections Performance Data

13.375 54.50/0.380 J55 PDF

New Search »

« Back to Previous List

USC Metric

6/8/2015 10:04:37 AM

Mechanical Properties	Pipe	BTC	LTC	STC	
Minimum Yield Strength	55,000	--	--	--	psi
Maximum Yield Strength	80,000	--	--	--	psi
Minimum Tensile Strength	75,000	--	--	--	psi
Dimensions	**Pipe**	**BTC**	**LTC**	**STC**	
Outside Diameter	13.375	14.375	--	14.375	in.
Wall Thickness	0.380	--	--	--	in.
Inside Diameter	12.615	12.615	--	12.615	in.
Standard Drift	12.459	12.459	--	12.459	in.
Alternate Drift	--	--	--	--	in.
Nominal Linear Weight, T&C	54.50	--	--	--	lbs/ft
Plain End Weight	52.79	--	--	--	lbs/ft
Performance	**Pipe**	**BTC**	**LTC**	**STC**	
Minimum Collapse Pressure	1,130	1,130	--	1,130	psi
Minimum Internal Yield Pressure	2,740	2,740	--	2,740	psi
Minimum Pipe Body Yield Strength	853.00	--	--	--	1000 lbs
Joint Strength	--	909	--	514	1000 lbs
Reference Length	--	11,125	--	6,290	ft
Make-Up Data	**Pipe**	**BTC**	**LTC**	**STC**	
Make-Up Loss	--	4.81	--	3.50	in.
Minimum Make-Up Torque	--	--	--	3,860	ft-lbs
Maximum Make-Up Torque	--	--	--	6,430	ft-lbs

Casing Spec Sheets

Pipe Body and API Connections Performance Data

10.750 40.50/0.350 J55

PDF

New Search »

« Back to Previous List

USC Metric

6/8/2015 10:14:05 AM

Mechanical Properties	Pipe	BTC	LTC	STC	
Minimum Yield Strength	55,000	--	--	--	psi
Maximum Yield Strength	80,000	--	--	--	psi
Minimum Tensile Strength	75,000	--	--	--	psi
Dimensions	**Pipe**	**BTC**	**LTC**	**STC**	
Outside Diameter	10.750	11.750	--	11.750	in.
Wall Thickness	0.350	--	--	--	in.
Inside Diameter	10.050	10.050	--	10.050	in.
Standard Drift	9.894	9.894	--	9.894	in.
Alternate Drift	--	--	--	--	in.
Nominal Linear Weight, T&C	40.50	--	--	--	lbs/ft
Plain End Weight	38.91	--	--	--	lbs/ft
Performance	**Pipe**	**BTC**	**LTC**	**STC**	
Minimum Collapse Pressure	1,580	1,580	--	1,580	psi
Minimum Internal Yield Pressure	3,130	3,130	--	3,130	psi
Minimum Pipe Body Yield Strength	629.00	--	--	--	1000 lbs
Joint Strength	--	700	--	420	1000 lbs
Reference Length	--	11,522	--	6,915	ft
Make-Up Data	**Pipe**	**BTC**	**LTC**	**STC**	
Make-Up Loss	--	4.81	--	3.50	in.
Minimum Make-Up Torque	--	--	--	3,150	ft-lbs
Maximum Make-Up Torque	--	--	--	5,250	ft-lbs

VALLOUREC STAR 8.625 32# J55 S S2L2 DA 7.875 W/O# SLN # PO# MADE IN USA FT LB

vallourec

API 5CT, 10th Ed. Connection Data Sheet

O.D. (in)	WEIGHT (lb/ft)	WALL (in)	GRADE	*API DRIFT (in)	RBW %
8.625	Nominal: 32.00 Plain End: 31.13	0.352	J55	7.796	87.5

Material Properties (PE)	
Pipe	
Minimum Yield Strength:	55 ksi
Maximum Yield Strength:	80 ksi
Minimum Tensile Strength:	75 ksi
Coupling	
Minimum Yield Strength:	55 ksi
Maximum Yield Strength:	80 ksi
Minimum Tensile Strength:	75 ksi

Pipe Body Data (PE)	
Geometry	
Nominal ID:	7.92 inch
Nominal Area:	9.149 in^2
*Special/Alt. Drift:	7.875 inch
Performance	
Pipe Body Yield Strength:	503 kips
Collapse Resistance:	2,530 psi
Internal Yield Pressure: (API Historical)	3,930 psi

API Connection Data Coupling OD: 9.625"	
STC Performance	
STC Internal Pressure:	3,930 psi
STC Joint Strength:	372 kips
LTC Performance	
LTC Internal Pressure:	3,930 psi
LTC Joint Strength:	417 kips
SC-BTC Performance - Cplg OD = 9.125"	
BTC Internal Pressure:	3,930 psi
BTC Joint Strength:	503 kips

API Connection Torque					
STC Torque (ft-lbs)					
Min:	2,793	Opti:	3,724	Max:	4,655
LTC Torque (ft-lbs)					
Min:	3,130	Opti:	4,174	Max:	5,217
BTC Torque (ft-lbs)					
follow API guidelines regarding positional make up					

*Alt. Drift will be used unless API Drift is specified on order.

**If above API connections do not suit your needs, VAM® premium connections are available up to 100% of pipe body ratings.

ALL INFORMATION IS PROVIDED BY VALLOUREC OR ITS AFFILIATES AT USER'S SOLE RISK, WITHOUT LIABILITY FOR LOSS, DAMAGE OR INJURY RESULTING FROM THE USE THEREOF, AND ON AN "AS IS" BASIS WITHOUT WARRANTY OR REPRESENTATION OF ANY KIND, WHETHER EXPRESS OR IMPLIED, INCLUDING WITHOUT LIMITATION ANY WARRANTY OF MERCHANTABILITY, FITNESS FOR PURPOSE, ACCURACY OR COMPLETENESS. THE INFORMATION CONTAINED IN THIS DOCUMENT IS PROVIDED FOR INFORMATIONAL PURPOSES ONLY AND IS BASED ON ESTIMATES THAT HAVE NOT BEEN VERIFIED OR TESTED. IN NO EVENT SHALL VALLOUREC OR ITS AFFILIATES BE RESPONSIBLE FOR ANY INDIRECT, SPECIAL, INCIDENTAL, PUNITIVE, EXEMPLARY OR CONSEQUENTIAL LOSS OR DAMAGE (INCLUDING WITHOUT LIMITATION, LOSS OF USE, LOSS OF BARGAIN, LOSS OF REVENUE, PROFIT OR ANTICIPATED PROFIT) HOWEVER CAUSED OR ARISING, AND WHETHER SUCH LOSSES OR DAMAGES WERE FORESEEABLE OR VALLOUREC OR ITS AFFILIATES WERE ADVISED OF THE POSSIBILITY OF SUCH DAMAGES.

Rev 3, 7/30/2021

10/21/2022 15:24

eog resources

EOG BLANKET CASING DESIGN VARIANCE

EOG respectfully requests the drill plans in the attached document 'EOG Alternate Casing Designs – BLM APPROVED' be added to the COA's for this well. These designs have been approved by the BLM down to the TVDs listed below and will allow EOG to run alternate casing designs for this well if necessary.

The designs and associated details listed are the "worst case scenario" boundaries for design safety factors. Location and lithology have NOT been accounted for in these designs. The specific well details will be based on the APD/Sundry package and the information listed in the COA.

The mud program will not change from the original design for this well. Summary of the mud programs for both shallow and deep targets are listed at the end of this document. If the target is changing, a sundry will be filed to update the casing design and mud/cement programs.

Cement volumes listed in this document are for reference only. The cement volumes for the specific well will be adjusted to ensure cement tops meet BLM requirements as listed in the COA and to allow bradenhead cementing when applicable.

This blanket document only applies to wells with three string designs outside of Potash and Capitan Reef boundaries.

Shallow Design Boundary Conditions				
	Deepest MD (ft)	Deepest TVD (ft)	Max Inc (deg)	Max DLS (°/100usft)
Surface	2030	2030	0	0
Intermediate	7793	5650	40	8
Production	28578	12000	90	25

eog resources

Shallow Design A

4. CASING PROGRAM

Hole Size	Interval MD From (ft)	Interval MD To (ft)	Interval TVD From (ft)	Interval TVD To (ft)	Csg OD	Weight	Grade	Conn
16"	0	2,161	0	2,030	13-3/8"	54.5#	J-55	STC
11"	0	7,951	0	5,650	9-5/8"	40#	J-55	LTC
6-3/4"	0	29,353	0	12,000	5-1/2"	20#	P110-EC	DWC/C IS MS

Hole will be full during casing run for well control and tensile SF factor. Casing will be kept at least half full during run for this design to meet BLM collapse SF requirement. External pressure will be reviewed prior to conducting casing pressure tests to ensure that 70% of the yield is not exceeded.

Variance is requested to waive the centralizer requirements for the 9-5/8" casing in the 11" hole size. An expansion additive will be utilized, in the cement slurry, for the entire length of the 11" hole interval to maximize cement bond and zonal isolation.

Variance is also requested to waive any centralizer requirements for the 5-1/2" casing in the 6-3/4" hole size. An expansion additive will be utilized, in the cement slurry, for the entire length of the 6-3/4" hole interval to maximize cement bond and zonal isolation.

EOG requests permission to allow deviation from the 0.422'' annulus clearance requirement for the intermediate (salt) section from Title 43 CFR Part 3170 under the following conditions:

- The variance is not applicable within the Potash Boundaries or Capitan Reef areas.
- Operator takes responsibility to get casing to set point in the event that the clearance causes stuck pipe issues.

5. CEMENTING PROGRAM:

Depth	No. Sacks	Wt. ppg	Yld Ft3/sk	Slurry Description
2,030' 13-3/8"	570	13.5	1.73	Lead: Class C + 4.0% Bentonite Gel + 0.5% CaCl2 + 0.25 lb/sk Cello-Flake (TOC @ Surface)
	160	14.8	1.34	Tail: Class C + 0.6% FL-62 + 0.25 lb/sk Cello-Flake + 0.2% Sodium Metasilicate (TOC @ 1830')
8,050' 9-5/8"	760	12.7	2.22	Lead: Class C + 10% NaCl + 6% Bentonite Gel + 3% MagOx (TOC @ Surface)
	250	14.8	1.32	Tail: Class C + 10% NaCL + 3% MagOx (TOC @ 6360')
29,353' 5-1/2"	1000	14.8	1.32	Bradenhead squeeze: Class C + 3% Salt + 1% PreMag-M + 6% Bentonite Gel (TOC @ surface)
	1480	13.2	1.52	Tail: Class H + 5% NEX-020 + 0.2% NAC-102 + 0.15% NAS-725 + 0.5% NFL-549 + 0.2% NFP-703 + 1% NBE-737 + 0.3% NRT-241 (TOC @ Top of Brushy)

eog resources

Shallow Design A

Proposed Wellbore

KB: 3558'
GL: 3533'

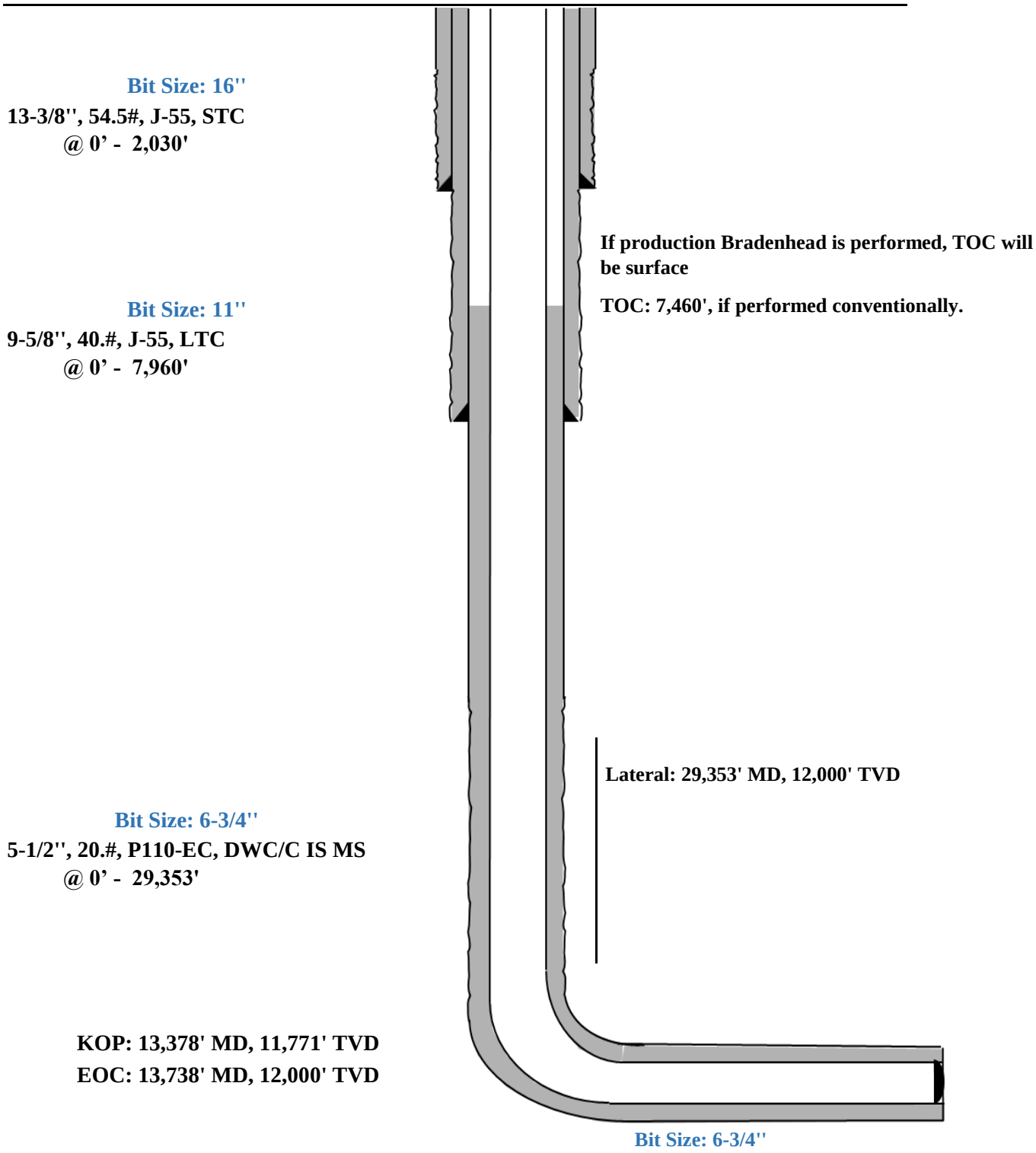

Stresscheck - [Triaxial Results - Shallow 3.0 Mile - Big Hole]

File Edit Wellbore Tubular View Composer Tools Window Help

9 5/8" Intermediate Casing

Pressure Test

Triaxial Results

	Depth (MD) (usft)	Axial Force (lbf) Apparent (w/Bending)	Axial Force (lbf) Actual (w/o Bending)	Equivalent Axial Load (lbf)	Bending Stress at OD (psi)	Absolute Safety Factor Triaxial	Absolute Safety Factor Burst	Absolute Safety Factor Collapse (V)	Absolute Safety Factor Axial	Temperature (°F)	Pressure (psi) Internal	Pressure (psi) External	Addt'l Pickup To Prevent Buck. (lbf)	Buckled Length (usft)
1	0	252987	228954	253140	2098.2	1.69	1.58	N/A	2.82 F	70.00	2500.00	0.00	N/A	N/A
2	100	247735	223702	248466	2098.2	1.69	1.58	N/A	2.88 F	71.10	2543.63	43.63		
3	100	234996	223701	235716	986.2	1.71	1.58	N/A	3.04 F	71.10	2543.64	43.64		
4	1700	341565	139667	352253	17627.2	1.53	1.57	N/A	2.09 F	88.70	3241.64	741.64		
5	1700	312979	139666	323488	15131.5	1.58	1.57	N/A	2.28 F	88.70	3241.65	741.65		
6	1850	336881	132027	348440	17885.2	1.51	1.57	N/A	2.12 F	90.29	3305.05	805.05		
7	1850	318549	132027	329984	16284.8	1.54	1.57	N/A	2.24 F	90.29	3305.06	805.06		
8	1950	320468	127243	332475	16869.9	1.52	1.57	N/A	2.23 F	91.30	3344.87	844.87		
9	1950	312802	127243	324756	16200.7	1.53	1.57	N/A	2.28 F	91.30	3344.87	844.87		
10	2050	307858	122773	320295	16159.3	1.52	1.57	N/A	2.32 F	92.23	3381.89	881.89		
11	2050	303560	122772	315965	15784.1	1.53	1.57	N/A	2.35 F	92.23	3381.89	881.89		
12	2300	151294	112633	163658	3375.4	1.71	1.57	N/A	4.72 F	94.35	3466.13	966.13		
13	2300	132741	112633	144956	1755.6	1.72	1.57	N/A	5.38 F	94.35	3466.14	966.14		
14	2370	129966	109858	142452	1755.6	1.72	1.57	N/A	5.49 F	94.94	3489.28	989.28		
15	2370	127909	107800	140922	1755.6	1.75	1.60	N/A	5.58 F	94.94	3489.29	1036.40		
16	2700	105515	94232	119785	985.1	1.75	1.60	N/A	6.77 F	97.73	3599.97	1152.35		
17	2700	111680	94231	126006	1523.4	1.75	1.60	N/A	6.39 F	97.73	3599.97	1152.35		
18	3100	110766	77783	126839	2879.6	1.71	1.60	N/A	6.44 F	101.11	3734.23	1293.00		
19	3100	97392	77783	113331	1712.1	1.73	1.60	N/A	7.33 F	101.11	3734.23	1293.01		
20	3700	71565	53303	89806	1594.4	1.70	1.61	N/A	9.97 F	106.15	3934.24	1502.54		
21	3700	60887	53302	79004	662.3	1.71	1.61	N/A	11.72 F	106.16	3934.25	1502.55		
22	4650	34671	14219	56495	1785.6	1.64	1.61	N/A	20.59 F	114.20	4253.37	1836.86		
23	4900	44595	4828	67626	3472.0	1.59	1.61	N/A	16.01 F	116.32	4337.37	1924.87		
24	4900	28975	4828	51775	2108.2	1.62	1.61	N/A	24.64 F	116.32	4337.38	1924.87		
25	5029	22103	34	45340	1926.8	1.61	1.61	N/A	32.30 F	117.40	4380.40	1969.94		
26	5029	22102	33	45339	1926.8	1.61	1.61	N/A	32.30 F	117.40	4380.41	1969.95		
27	5600	-45329	-21341	-20805	2094.3	1.57	1.62	N/A	(13.67)	122.23	4572.11	2170.78		
28	5650	-40465	-23210	-15657	1506.5	1.58	1.62	N/A	(15.31)	122.66	4588.87	2188.34		
29														
30	F	Conn Fracture												
31	( )	Compression												
32	(V)	Vector Collapse Safety Factor												
33														

Working / Config / Min SF / Load/SF / DF Summary / VME / Wallplot

For Help, press F1

Default Datum @ 0.00 usft | API - US Survey Feet | jqriffin2

9-5/8" Intermediate Casing Pressure Test:
Internal Profile based off Surface Pressure + Hydrostatic: 4589 psi
External Profile based off Pore Pressure: 2188 psi

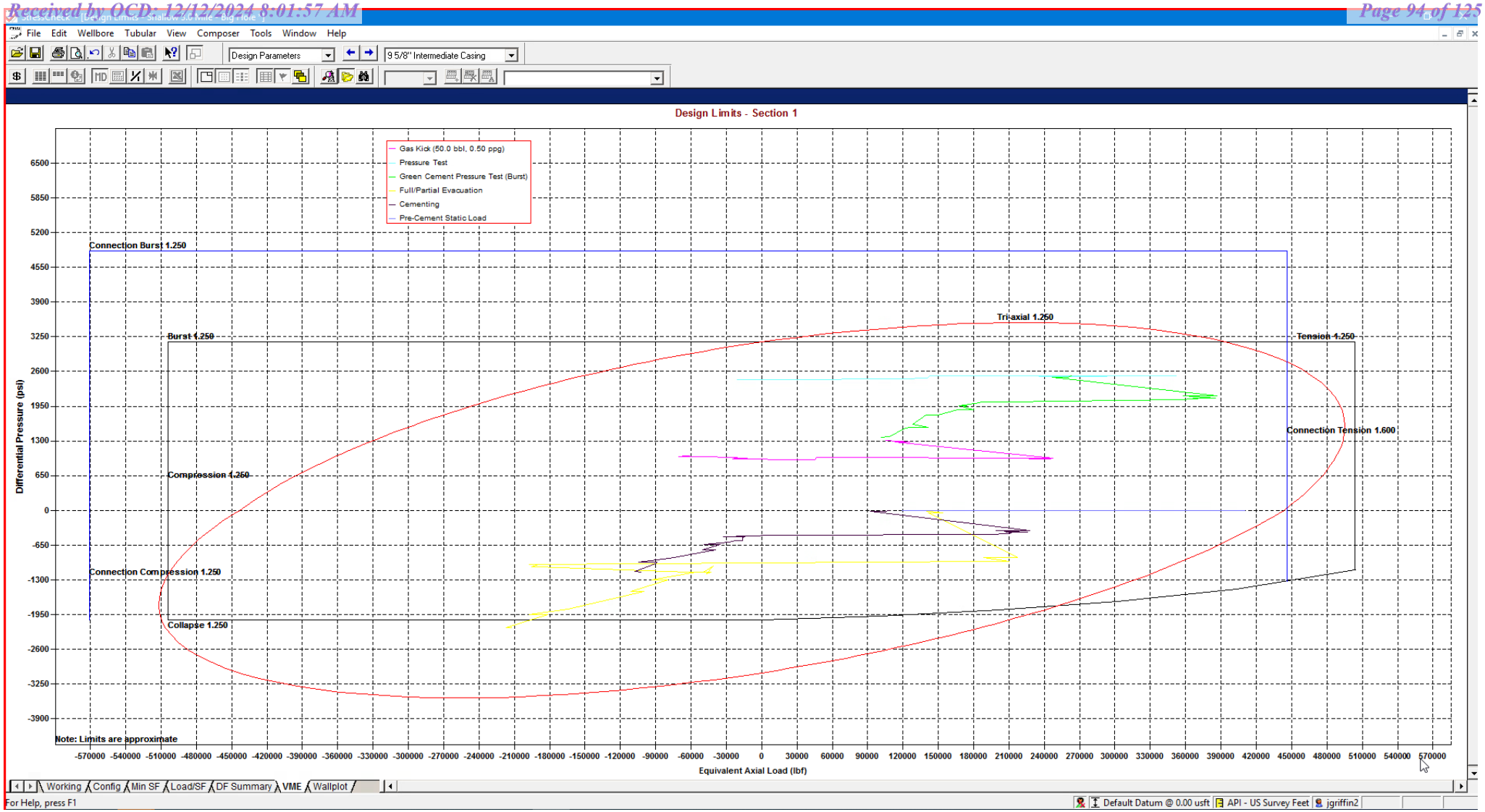

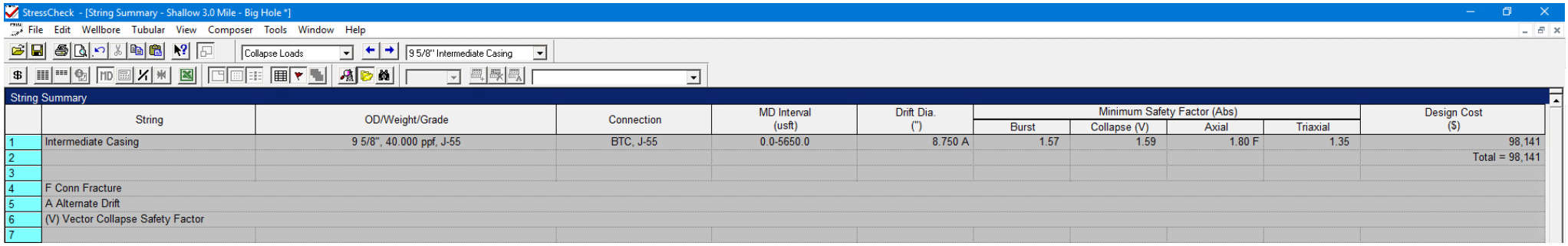

	String	OD/Weight/Grade	Connection	MD Interval (usft)	Drift Dia. (")	Minimum Safety Factor (Abs)				Design Cost ($)
						Burst	Collapse (V)	Axial	Triaxial	
1	Intermediate Casing	9 5/8", 40.000 ppf, J-55	BTC, J-55	0.0-5650.0	8.750 A	1.57	1.59	1.80 F	1.35	98,141
2										Total = 98,141
3										
4	F Conn Fracture									
5	A Alternate Drift									
6	(V) Vector Collapse Safety Factor									
7										

*Modelling done with 9-5/8" 40# Intermediate Casing. Passes all Burst, Collapse and Tensile design criteria.

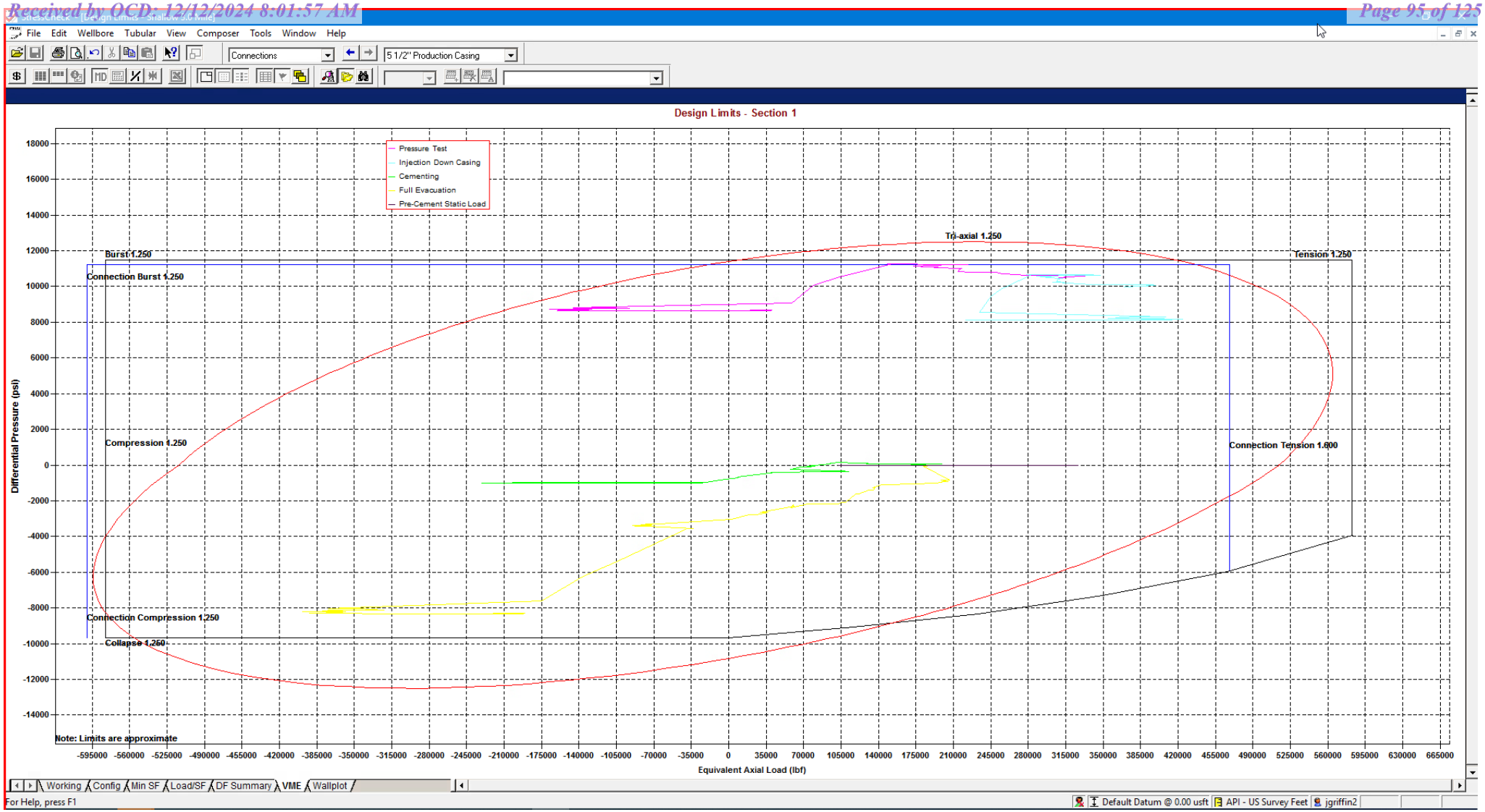

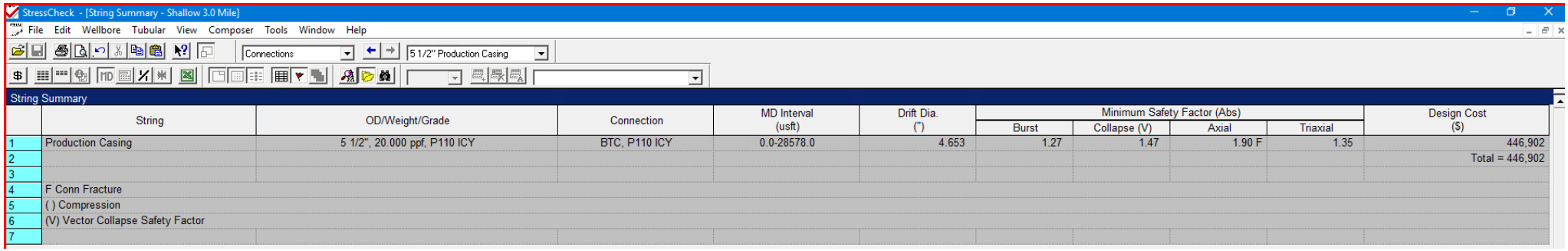

	String	OD/Weight/Grade	Connection	MD Interval (usft)	Drift Dia. (")	Minimum Safety Factor (Abs)				Design Cost ($)
						Burst	Collapse (V)	Axial	Triaxial	
1	Production Casing	5 1/2", 20.000 ppf, P110 ICY	BTC, P110 ICY	0.0-28578.0	4.653	1.27	1.47	1.90 F	1.35	446,902
2										Total = 446,902
3										
4	F Conn Fracture									
5	( ) Compression									
6	(V) Vector Collapse Safety Factor									
7										

*Modelling done with 5-1/2" 20# Production Casing with a 125ksi Control Yield. Passes all Burst, Collapse and Tensile design criteria.

eog resources

Shallow Design B

4. CASING PROGRAM

Hole Size	Interval MD From (ft)	Interval MD To (ft)	Interval TVD From (ft)	Interval TVD To (ft)	Csg OD	Weight	Grade	Conn
13-1/2"	0	2,161	0	2,030	10-3/4"	40.5#	J-55	STC
9-7/8"	0	7,951	0	5,650	8-5/8"	32#	J-55	BTC-SC
6-3/4"	0	29,353	0	12,000	5-1/2"	20#	P110-EC	DWC/C IS MS

Hole will be full during casing run for well control and tensile SF factor. Casing will be kept at least half full during run for this design to meet BLM collapse SF requirement. External pressure will be reviewed prior to conducting casing pressure tests to ensure that 70% of the yield is not exceeded.

Variance is requested to waive the centralizer requirements for the 8-5/8" casing in the 9-7/8" hole size. An expansion additive will be utilized, in the cement slurry, for the entire length of the 9-7/8" hole interval to maximize cement bond and zonal isolation.

Variance is also requested to waive any centralizer requirements for the 5-1/2" casing in the 6-3/4" hole size. An expansion additive will be utilized, in the cement slurry, for the entire length of the 6-3/4" hole interval to maximize cement bond and zonal isolation.

EOG requests permission to allow deviation from the 0.422'' annulus clearance requirement for the intermediate (salt) section from Title 43 CFR Part 3170 under the following conditions:

- The variance is not applicable within the Potash Boundaries or Capitan Reef areas.
- Operator takes responsibility to get casing to set point in the event that the clearance causes stuck pipe issues.

5. CEMENTING PROGRAM:

Depth	No. Sacks	Wt. ppg	Yld Ft3/sk	Slurry Description
2,030' 10-3/4"	530	13.5	1.73	Lead: Class C + 4.0% Bentonite Gel + 0.5% CaCl2 + 0.25 lb/sk Cello-Flake (TOC @ Surface)
	140	14.8	1.34	Tail: Class C + 0.6% FL-62 + 0.25 lb/sk Cello-Flake + 0.2% Sodium Metasilicate (TOC @ 1830')
8,050' 8-5/8"	470	12.7	2.22	Lead: Class C + 10% NaCl + 6% Bentonite Gel + 3% MagOx (TOC @ Surface)
	210	14.8	1.32	Tail: Class C + 10% NaCL + 3% MagOx (TOC @ 6360')
29,353' 5-1/2"	1000	14.8	1.32	Bradenhead squeeze: Class C + 3% Salt + 1% PreMag-M + 6% Bentonite Gel (TOC @ surface)
	1480	13.2	1.52	Tail: Class H + 5% NEX-020 + 0.2% NAC-102 + 0.15% NAS-725 + 0.5% NFL-549 + 0.2% NFP-703 + 1% NBE-737 + 0.3% NRT-241 (TOC @ Top of Brushy)

eog resources

Shallow Casing Design B

Proposed Wellbore

KB: 3558'
GL: 3533'

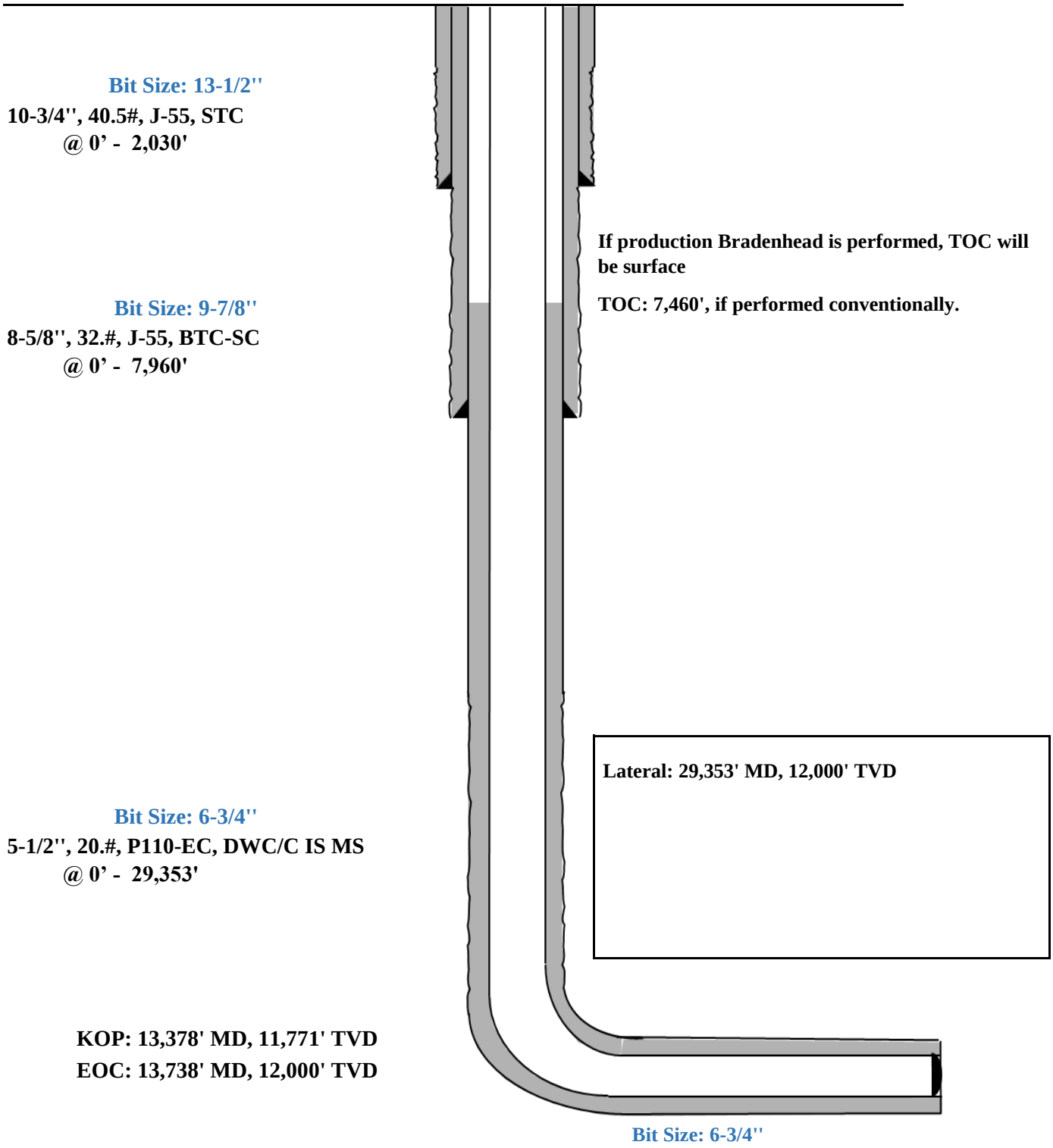

StressCheck - [Triaxial Results - Shallow 3.0 Mile *]

File Edit Wellbore Tubular View Composer Tools Window Help

Burst Design | 8 5/8" Intermediate Casing | Pressure Test

Triaxial Results

	Depth (MD) (usft)	Axial Force (lbf) Apparent (w/Bending)	Axial Force (lbf) Actual (w/o Bending)	Equivalent Axial Load (lbf)	Bending Stress at OD (psi)	Absolute Safety Factor Triaxial	Absolute Safety Factor Burst	Absolute Safety Factor Collapse (V)	Absolute Safety Factor Axial	Temperature (°F)	Pressure (psi) Internal	Pressure (psi) External	Addt'l Pickup To Prevent Buck. (lbf)	Buckled Length (usft)
1	0	200426	183224	200546	1880.2	1.68	1.57	N/A	2.89 F	70.00	2500.00	0.00	N/A	N/A
2	100	196229	179028	196812	1880.2	1.69	1.57	N/A	2.95 F	71.10	2543.63	43.63		
3	100	187111	179027	187686	883.7	1.70	1.57	N/A	3.10 F	71.10	2543.64	43.64		
4	1700	256401	111891	264835	15795.8	1.56	1.56	N/A	2.26 F	88.70	3241.64	741.64		
5	1700	235940	111891	244247	13559.4	1.60	1.56	N/A	2.45 F	88.70	3241.65	741.65		
6	1850	252413	105788	261533	16027.0	1.54	1.56	N/A	2.29 F	90.29	3305.05	805.05		
7	1850	239292	105787	248323	14592.9	1.56	1.56	N/A	2.42 F	90.29	3305.06	805.06		
8	1950	240267	101966	249748	15117.2	1.54	1.56	N/A	2.41 F	91.30	3344.87	844.87		
9	1950	234781	101965	244223	14517.5	1.56	1.56	N/A	2.47 F	91.30	3344.87	844.87		
10	2050	230871	98395	240694	14480.4	1.55	1.56	N/A	2.51 F	92.23	3381.89	881.89		
11	2050	227794	98394	237594	14144.2	1.55	1.56	N/A	2.54 F	92.23	3381.89	881.89		
12	2300	117966	90294	127818	3024.7	1.70	1.56	N/A	4.91 F	94.35	3466.13	966.13		
13	2300	104686	90293	114432	1573.2	1.71	1.56	N/A	5.53 F	94.35	3466.14	966.14		
14	2370	102469	88077	112431	1573.2	1.71	1.56	N/A	5.65 F	94.94	3489.28	989.28		
15	2370	100817	86424	111200	1573.2	1.75	1.59	N/A	5.75 F	94.94	3489.29	1036.40		
16	2700	83660	75583	95052	882.8	1.74	1.59	N/A	6.92 F	97.73	3599.97	1152.35		
17	2700	88072	75583	99504	1365.1	1.74	1.59	N/A	6.58 F	97.73	3599.97	1152.35		
18	3100	86049	62442	98863	2580.4	1.71	1.59	N/A	6.73 F	101.11	3734.23	1293.00		
19	3100	76477	62441	89195	1534.2	1.72	1.59	N/A	7.57 F	101.11	3734.23	1293.01		
20	3700	55953	42882	70509	1428.8	1.69	1.60	N/A	10.35 F	106.15	3934.24	1502.54		
21	3700	48311	42881	62778	593.5	1.71	1.60	N/A	11.99 F	106.16	3934.25	1502.55		
22	4000	41458	33043	56865	919.9	1.69	1.60	N/A	13.97 F	108.69	4034.82	1607.91		
23	4650	26293	11655	43706	1600.1	1.63	1.60	N/A	22.03 F	114.20	4253.37	1836.86		
24	4900	32619	4156	50970	3111.2	1.59	1.60	N/A	17.76 F	116.32	4337.37	1924.87		
25	4900	21439	4155	39625	1889.2	1.61	1.60	N/A	27.02 F	116.32	4337.38	1924.87		
26	5039	15822	26	34389	1726.6	1.61	1.61	N/A	36.61 F	117.49	4383.77	1973.48		
27	5039	15822	26	34388	1726.6	1.61	1.61	N/A	36.61 F	117.49	4383.78	1973.49		
28	5600	-33912	-16743	-14286	1876.7	1.57	1.61	N/A	(14.60)	122.23	4572.11	2170.78		
29	5650	-30585	-18235	-10742	1350.0	1.58	1.61	N/A	(16.18)	122.66	4588.87	2188.34		
30														
31	F	Conn Fracture												
32	( )	Compression												
33	(V)	Vector Collapse Safety Factor												
34														

Working | Config | Min SF | Load/SF | DF Summary | VME | Wallplot

For Help, press F1 | Default Datum @ 0.00 usft | API - US Survey Feet | jgriffin2

8-5/8" Intermediate Casing Pressure Test:
Internal Profile based off Surface Pressure + Hydrostatic: 4589 psi
External Profile based off Pore Pressure: 2188 psi

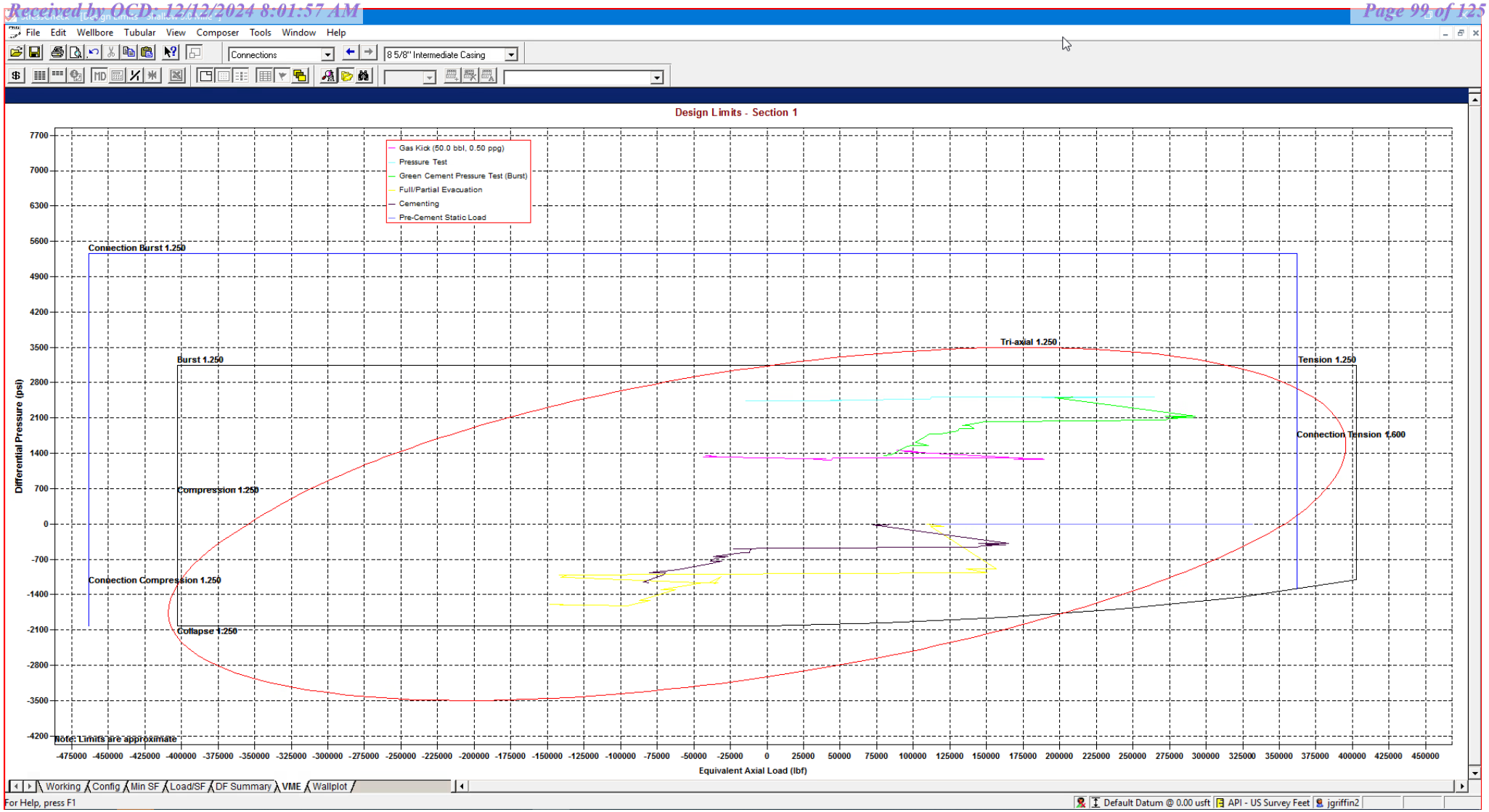

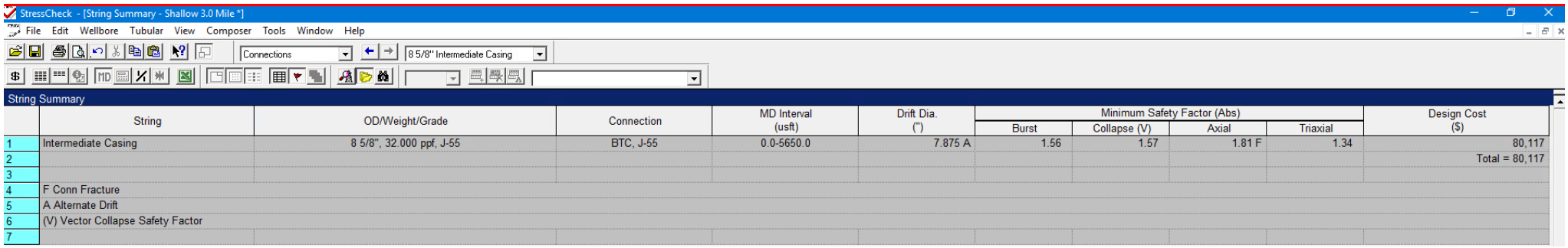

	String	OD/Weight/Grade	Connection	MD Interval (usft)	Drift Dia. (")	Minimum Safety Factor (Abs)				Design Cost ($)
						Burst	Collapse (V)	Axial	Triaxial	
1	Intermediate Casing	8 5/8", 32.000 ppf, J-55	BTC, J-55	0.0-5650.0	7.875 A	1.56	1.57	1.81 F	1.34	80,117
2										Total = 80,117
3										
4	F Conn Fracture									
5	A Alternate Drift									
6	(V) Vector Collapse Safety Factor									
7										

*Modelling done with 8-5/8" 32# Intermediate Casing. Passes all Burst, Collapse and Tensile design criteria.

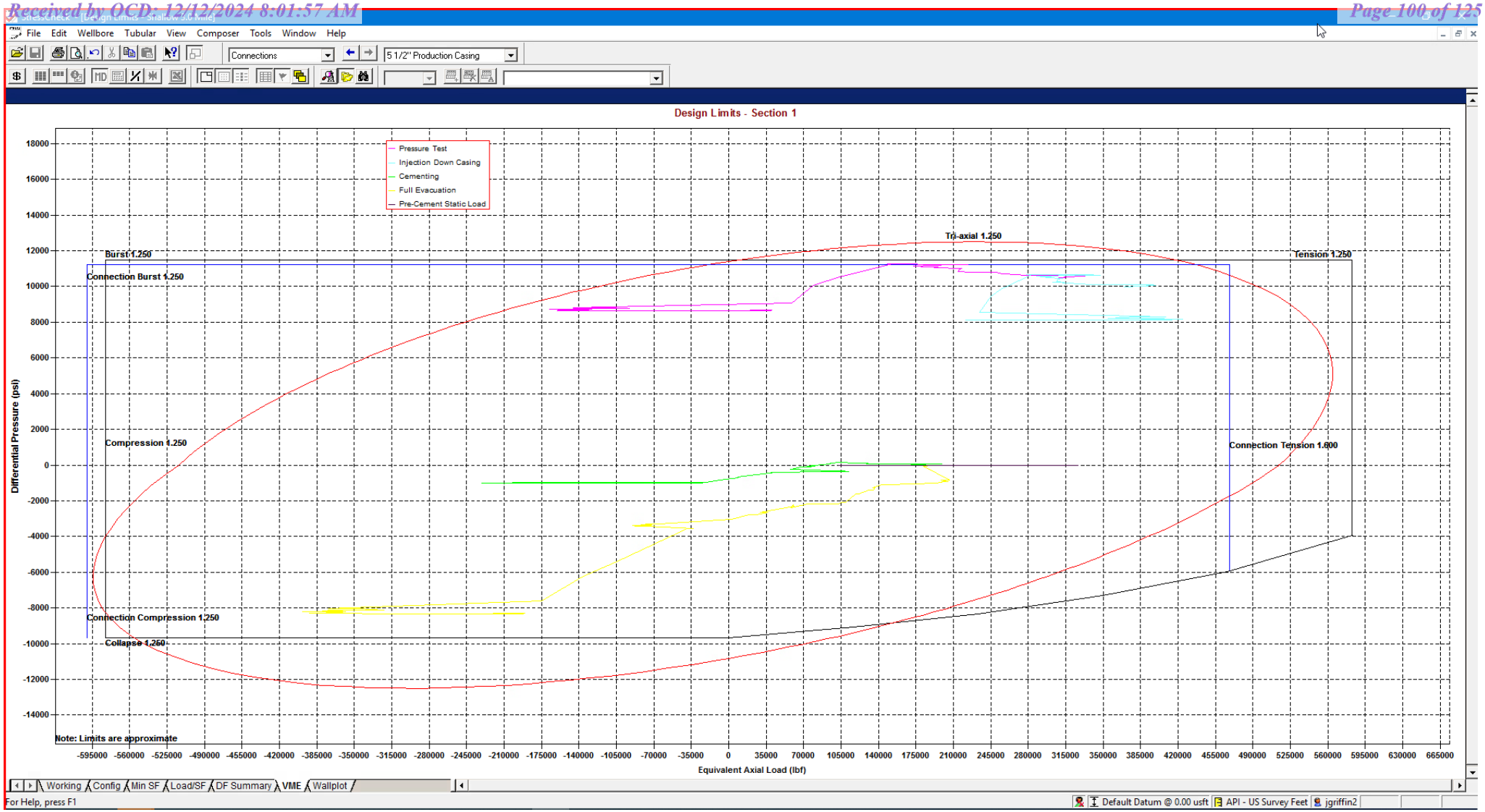

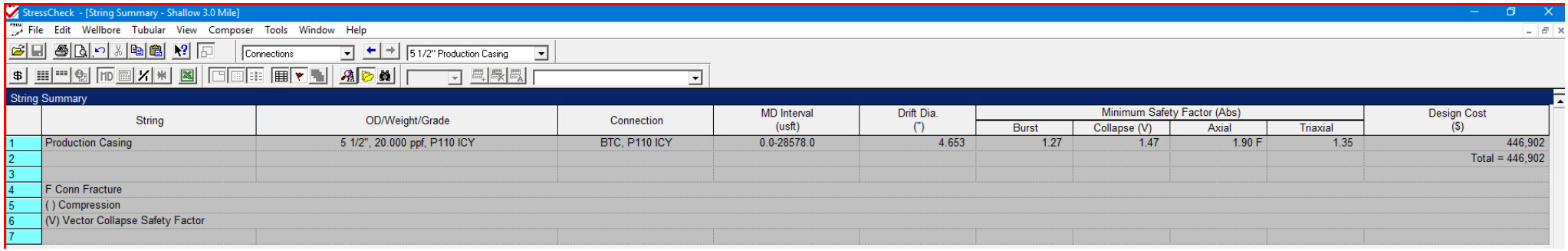

String Summary

	String	OD/Weight/Grade	Connection	MD Interval (usft)	Drift Dia. (")	Minimum Safety Factor (Abs)				Design Cost ($)
						Burst	Collapse (V)	Axial	Triaxial	
1	Production Casing	5 1/2", 20.000 ppf, P110 ICY	BTC, P110 ICY	0.0-28578.0	4.653	1.27	1.47	1.90 F	1.35	446,902
2										Total = 446,902
3										
4	F Conn Fracture									
5	( ) Compression									
6	(V) Vector Collapse Safety Factor									
7										

*Modelling done with 5-1/2" 20# Production Casing with a 125ksi Control Yield. Passes all Burst, Collapse and Tensile design criteria.

eog resources

Shallow Design C

4. CASING PROGRAM

Hole Size	Interval MD From (ft)	Interval MD To (ft)	Interval TVD From (ft)	Interval TVD To (ft)	Csg OD	Weight	Grade	Conn
16"	0	2,161	0	2,030	13-3/8"	54.5#	J-55	STC
11"	0	7,951	0	5,650	9-5/8"	40#	J-55	LTC
7-7/8"	0	29,353	0	12,000	6"	24.5#	P110-EC	VAM Sprint-SF

Hole will be full during casing run for well control and tensile SF factor. Casing will be kept at least half full during run for this design to meet BLM collapse SF requirement. External pressure will be reviewed prior to conducting casing pressure tests to ensure that 70% of the yield is not exceeded.

Variance is requested to waive the centralizer requirements for the 9-5/8" casing in the 11" hole size. An expansion additive will be utilized, in the cement slurry, for the entire length of the 11" hole interval to maximize cement bond and zonal isolation.

Variance is also requested to waive any centralizer requirements for the 6" casing in the 7-7/8" hole size. An expansion additive will be utilized, in the cement slurry, for the entire length of the 7-7/8" hole interval to maximize cement bond and zonal isolation.

EOG requests permission to allow deviation from the 0.422'' annulus clearance requirement for the intermediate (salt) section from Title 43 CFR Part 3170 under the following conditions:

- The variance is not applicable within the Potash Boundaries or Capitan Reef areas.
- Operator takes responsibility to get casing to set point in the event that the clearance causes stuck pipe issues.

5. CEMENTING PROGRAM:

Depth	No. Sacks	Wt. ppg	Yld Ft3/sk	Slurry Description
2,030' 13-3/8"	570	13.5	1.73	Lead: Class C + 4.0% Bentonite Gel + 0.5% CaCl2 + 0.25 lb/sk Cello-Flake (TOC @ Surface)
	160	14.8	1.34	Tail: Class C + 0.6% FL-62 + 0.25 lb/sk Cello-Flake + 0.2% Sodium Metasilicate (TOC @ 1830')
8,050' 9-5/8"	760	12.7	2.22	Lead: Class C + 10% NaCl + 6% Bentonite Gel + 3% MagOx (TOC @ Surface)
	250	14.8	1.32	Tail: Class C + 10% NaCL + 3% MagOx (TOC @ 6360')
29,353' 6"	1000	14.8	1.32	Bradenhead squeeze: Class C + 3% Salt + 1% PreMag-M + 6% Bentonite Gel (TOC @ surface)
	2500	13.2	1.52	Tail: Class H + 5% NEX-020 + 0.2% NAC-102 + 0.15% NAS-725 + 0.5% NFL-549 + 0.2% NFP-703 + 1% NBE-737 + 0.3% NRT-241 (TOC @ Top of Brushy)

eog resources

Shallow Design C

Proposed Wellbore

KB: 3558'
GL: 3533'

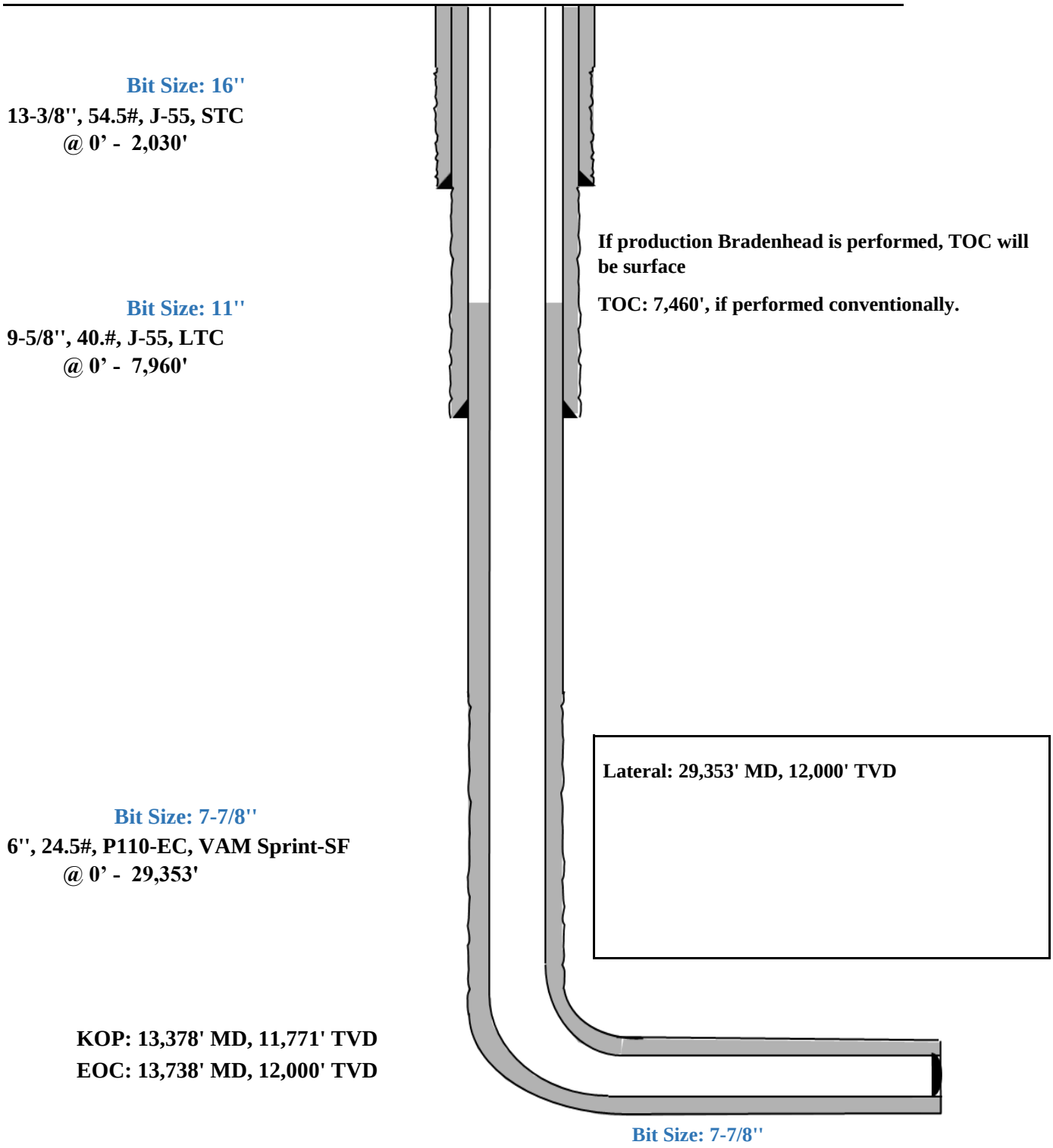

Stresscheck - [Triaxial Results - Shallow 3.0 Mile - Big Hole]

File Edit Wellbore Tubular View Composer Tools Window Help

9 5/8" Intermediate Casing

Pressure Test

Triaxial Results

	Depth (MD) (usft)	Axial Force (lbf) Apparent (w/Bending)	Axial Force (lbf) Actual (w/o Bending)	Equivalent Axial Load (lbf)	Bending Stress at OD (psi)	Absolute Safety Factor Triaxial	Absolute Safety Factor Burst	Absolute Safety Factor Collapse (V)	Absolute Safety Factor Axial	Temperature (°F)	Pressure (psi) Internal	Pressure (psi) External	Addt'l Pickup To Prevent Buck. (lbf)	Buckled Length (usft)
1	0	252987	228954	253140	2098.2	1.69	1.58	N/A	2.82 F	70.00	2500.00	0.00	N/A	N/A
2	100	247735	223702	248466	2098.2	1.69	1.58	N/A	2.88 F	71.10	2543.63	43.63		
3	100	234996	223701	235716	986.2	1.71	1.58	N/A	3.04 F	71.10	2543.64	43.64		
4	1700	341565	139667	352253	17627.2	1.53	1.57	N/A	2.09 F	88.70	3241.64	741.64		
5	1700	312979	139666	323488	15131.5	1.58	1.57	N/A	2.28 F	88.70	3241.65	741.65		
6	1850	336881	132027	348440	17885.2	1.51	1.57	N/A	2.12 F	90.29	3305.05	805.05		
7	1850	318549	132027	329984	16284.8	1.54	1.57	N/A	2.24 F	90.29	3305.06	805.06		
8	1950	320468	127243	332475	16869.9	1.52	1.57	N/A	2.23 F	91.30	3344.87	844.87		
9	1950	312802	127243	324756	16200.7	1.53	1.57	N/A	2.28 F	91.30	3344.87	844.87		
10	2050	307858	122773	320295	16159.3	1.52	1.57	N/A	2.32 F	92.23	3381.89	881.89		
11	2050	303560	122772	315965	15784.1	1.53	1.57	N/A	2.35 F	92.23	3381.89	881.89		
12	2300	151294	112633	163658	3375.4	1.71	1.57	N/A	4.72 F	94.35	3466.13	966.13		
13	2300	132741	112633	144956	1755.6	1.72	1.57	N/A	5.38 F	94.35	3466.14	966.14		
14	2370	129966	109858	142452	1755.6	1.72	1.57	N/A	5.49 F	94.94	3489.28	989.28		
15	2370	127909	107800	140922	1755.6	1.75	1.60	N/A	5.58 F	94.94	3489.29	1036.40		
16	2700	105515	94232	119785	985.1	1.75	1.60	N/A	6.77 F	97.73	3599.97	1152.35		
17	2700	111680	94231	126006	1523.4	1.75	1.60	N/A	6.39 F	97.73	3599.97	1152.35		
18	3100	110766	77783	126839	2879.6	1.71	1.60	N/A	6.44 F	101.11	3734.23	1293.00		
19	3100	97392	77783	113331	1712.1	1.73	1.60	N/A	7.33 F	101.11	3734.23	1293.01		
20	3700	71565	53303	89806	1594.4	1.70	1.61	N/A	9.97 F	106.15	3934.24	1502.54		
21	3700	60887	53302	79004	662.3	1.71	1.61	N/A	11.72 F	106.16	3934.25	1502.55		
22	4650	34671	14219	56495	1785.6	1.64	1.61	N/A	20.59 F	114.20	4253.37	1836.86		
23	4900	44595	4828	67626	3472.0	1.59	1.61	N/A	16.01 F	116.32	4337.37	1924.87		
24	4900	28975	4828	51775	2108.2	1.62	1.61	N/A	24.64 F	116.32	4337.38	1924.87		
25	5029	22103	34	45340	1926.8	1.61	1.61	N/A	32.30 F	117.40	4380.40	1969.94		
26	5029	22102	33	45339	1926.8	1.61	1.61	N/A	32.30 F	117.40	4380.41	1969.95		
27	5600	-45329	-21341	-20805	2094.3	1.57	1.62	N/A	(13.67)	122.23	4572.11	2170.78		
28	5650	-40465	-23210	-15657	1506.5	1.58	1.62	N/A	(15.31)	122.66	4588.87	2188.34		
29														
30	F	Conn Fracture												
31	( )	Compression												
32	(V)	Vector Collapse Safety Factor												
33														

Working / Config / Min SF / Load/SF / DF Summary / VME / Wallplot

For Help, press F1

Default Datum @ 0.00 usft | API - US Survey Feet | jqriffin2

9-5/8" Intermediate Casing Pressure Test:
Internal Profile based off Surface Pressure + Hydrostatic: 4589 psi
External Profile based off Pore Pressure: 2188 psi

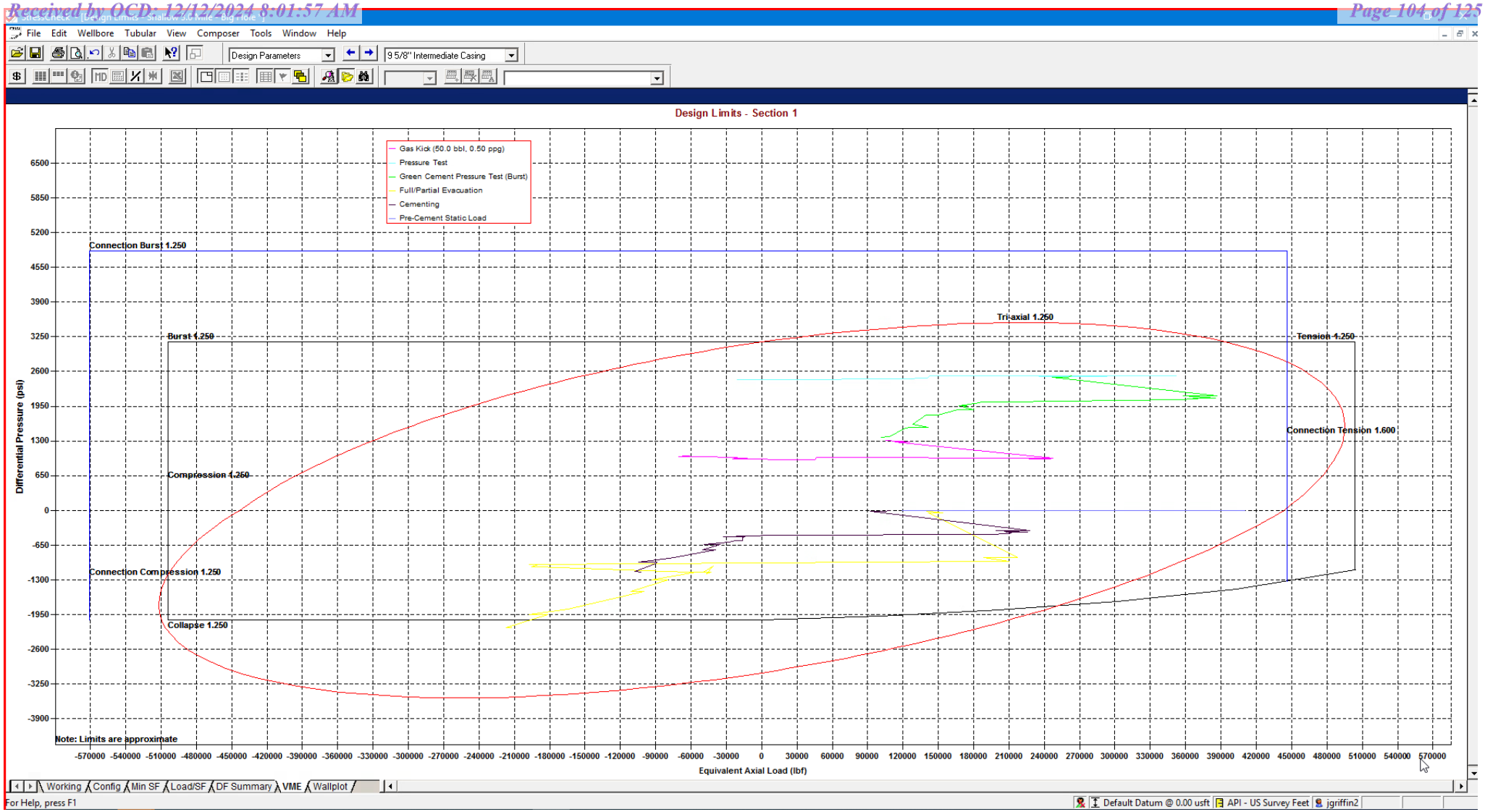

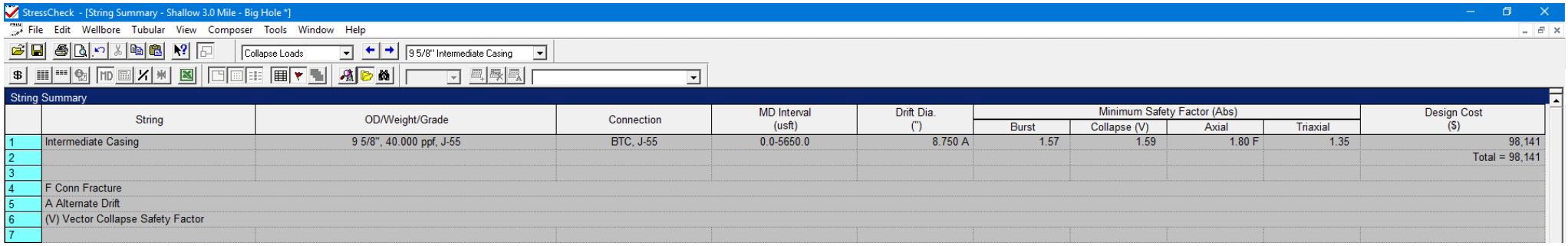

String Summary

	String	OD/Weight/Grade	Connection	MD Interval (usft)	Drift Dia. (")	Minimum Safety Factor (Abs)				Design Cost ($)
						Burst	Collapse (V)	Axial	Triaxial	
1	Intermediate Casing	9 5/8", 40.000 ppf, J-55	BTC, J-55	0.0-5650.0	8.750 A	1.57	1.59	1.80 F	1.35	98,141
2										Total = 98,141
3										
4	F Conn Fracture									
5	A Alternate Drift									
6	(V) Vector Collapse Safety Factor									
7										

*Modelling done with 9-5/8" 40# Intermediate Casing. Passes all Burst, Collapse and Tensile design criteria.

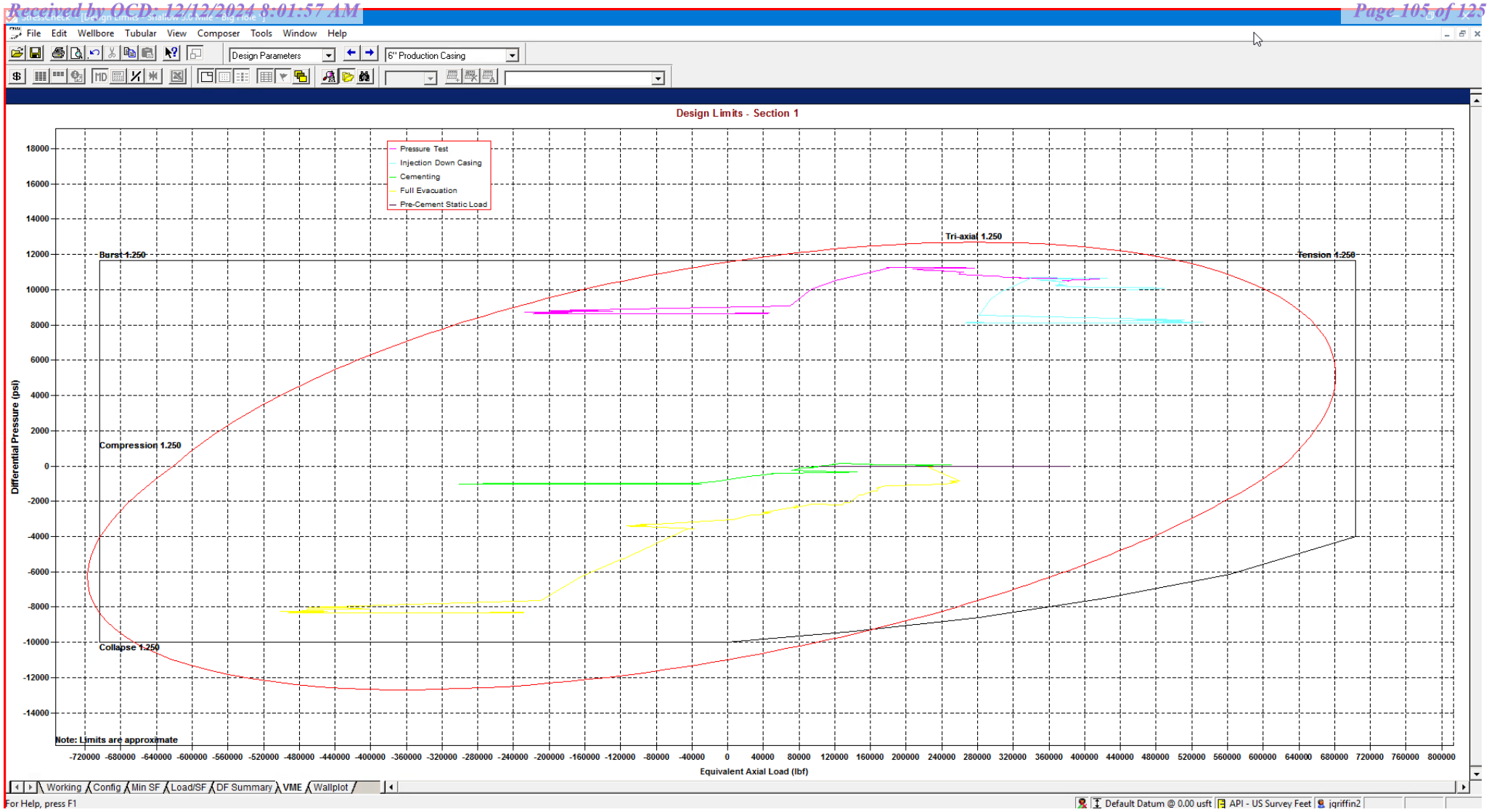

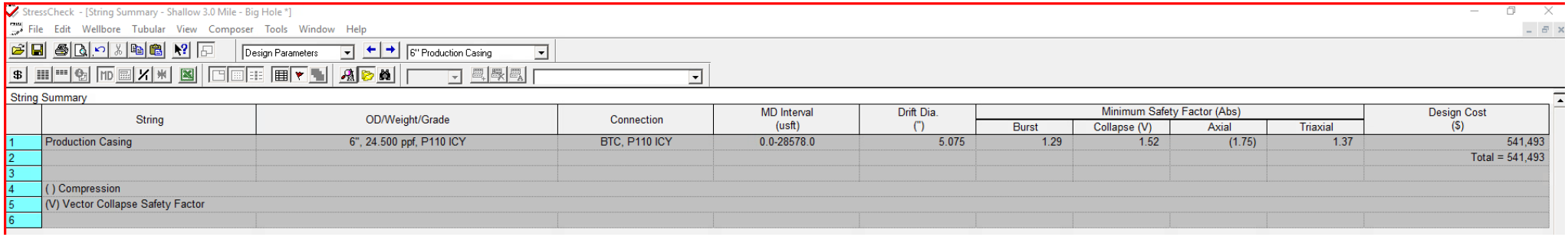

StressCheck - [String Summary - Shallow 3.0 Mile - Big Hole *]

String Summary

	String	OD/Weight/Grade	Connection	MD Interval (usft)	Drift Dia. (")	Minimum Safety Factor (Abs)				Design Cost ($)
						Burst	Collapse (V)	Axial	Triaxial	
1	Production Casing	6", 24.500 ppf, P110 ICY	BTC, P110 ICY	0.0-28578.0	5.075	1.29	1.52	(1.75)	1.37	541,493
2										Total = 541,493
3										
4	( ) Compression									
5	(V) Vector Collapse Safety Factor									
6										

*Modelling done with 6" Production Casing with a 125ksi Control Yield. Passes all Burst, Collapse and Tensile design criteria.

eog resources

Shallow Design D

4. CASING PROGRAM

Hole Size	Interval MD From (ft)	Interval MD To (ft)	Interval TVD From (ft)	Interval TVD To (ft)	Csg OD	Weight	Grade	Conn
16"	0	2,161	0	2,030	13-3/8"	54.5#	J-55	STC
11"	0	7,951	0	5,650	9-5/8"	40#	J-55	LTC
7-7/8"	0	13,278	0	11,671	6"	22.3#	P110-EC	DWC/C IS
6-3/4"	13,278	29,353	11,671	12,000	5-1/2"	20#	P110-EC	DWC/C IS MS

Hole will be full during casing run for well control and tensile SF factor. Casing will be kept at least half full during run for this design to meet BLM collapse SF requirement. External pressure will be reviewed prior to conducting casing pressure tests to ensure that 70% of the yield is not exceeded.

Variance is requested to waive the centralizer requirements for the 9-5/8" casing in the 11" hole size. An expansion additive will be utilized, in the cement slurry, for the entire length of the 11" hole interval to maximize cement bond and zonal isolation.

Variance is also requested to waive any centralizer requirements for the 6" and 5-1/2" casings in the 7-7/8" and 6-3/4" hole sizes. An expansion additive will be utilized in the cement slurry for the entire length of the 7-7/8" and 6-3/4" hole intervals to maximize cement bond and zonal isolation.

EOG requests permission to allow deviation from the 0.422'' annulus clearance requirement for the intermediate (salt) section from Title 43 CFR Part 3170 under the following conditions:

- The variance is not applicable within the Potash Boundaries or Capitan Reef areas.
- Operator takes responsibility to get casing to set point in the event that the clearance causes stuck pipe issues.

5. CEMENTING PROGRAM:

Depth	No. Sacks	Wt. ppg	Yld Ft3/sk	Slurry Description
2,030' 13-3/8"	570	13.5	1.73	Lead: Class C + 4.0% Bentonite Gel + 0.5% CaCl2 + 0.25 lb/sk Cello-Flake (TOC @ Surface)
	160	14.8	1.34	Tail: Class C + 0.6% FL-62 + 0.25 lb/sk Cello-Flake + 0.2% Sodium Metasilicate (TOC @ 1830')
8,050' 9-5/8"	760	12.7	2.22	Lead: Class C + 10% NaCl + 6% Bentonite Gel + 3% MagOx (TOC @ Surface)
	250	14.8	1.32	Tail: Class C + 10% NaCL + 3% MagOx (TOC @ 6360')
29,353' 6"	1000	14.8	1.32	Bradenhead squeeze: Class C + 3% Salt + 1% PreMag-M + 6% Bentonite Gel (TOC @ surface)
	2500	13.2	1.52	Tail: Class H + 5% NEX-020 + 0.2% NAC-102 + 0.15% NAS-725 + 0.5% NFL-549 + 0.2% NFP-703 + 1% NBE-737 + 0.3% NRT-241 (TOC @ Top of Brushy)

eog resources

Shallow Design D

Proposed Wellbore

KB: 3558'
GL: 3533'

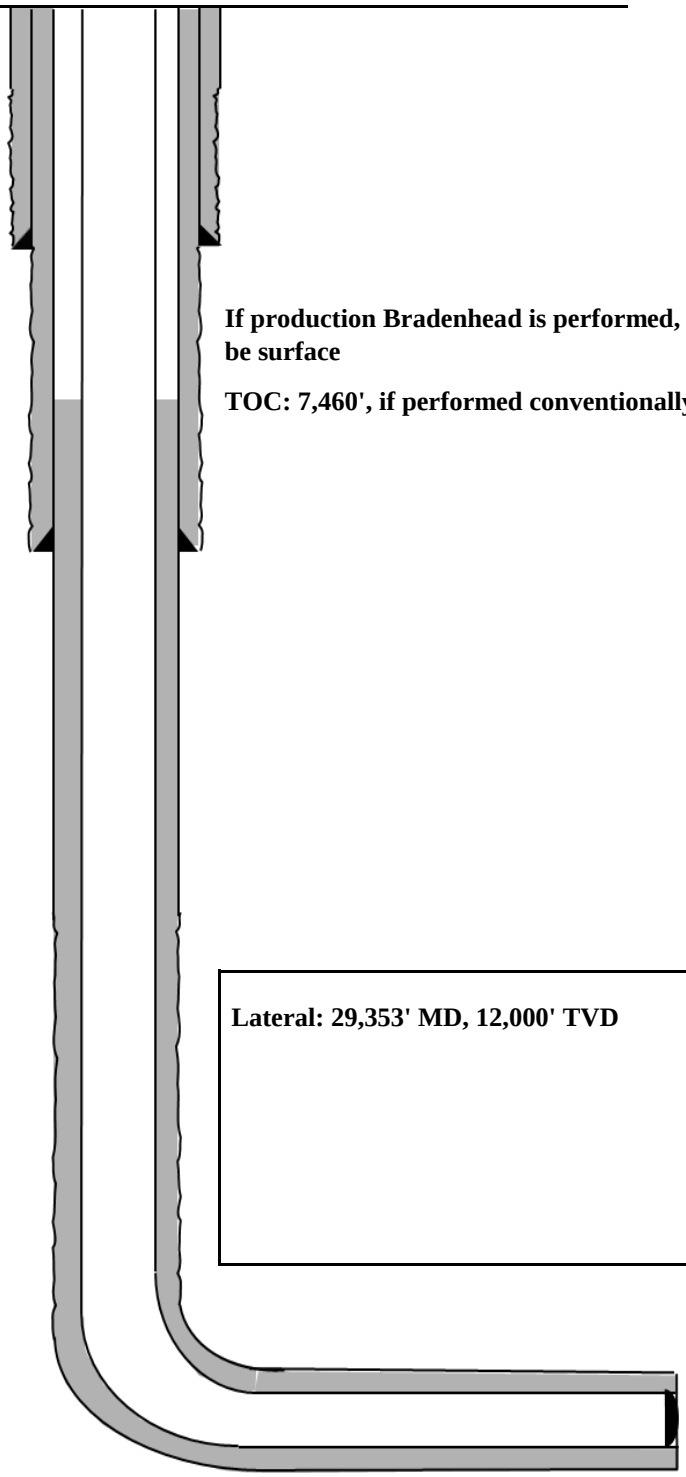

Bit Size: 16''
13-3/8'', 54.5#, J-55, STC
@ 0' - 2,030'

If production Bradenhead is performed, TOC will be surface

TOC: 7,460', if performed conventionally.

Bit Size: 11''
9-5/8'', 40.#, J-55, LTC
@ 0' - 7,960'

Lateral: 29,353' MD, 12,000' TVD

Bit Size: 7-7/8''|Bit Size: 6-3/4''
6'', 22.3#, P110-EC, DWC/C IS
@ 0' - 11,671'

5-1/2'', 20.#, P110-EC, DWC/C IS MS
@ 11,671' - 29,353'

KOP: 13,378' MD, 11,771' TVD
EOC: 13,738' MD, 12,000' TVD

File Edit Wellbore Tubular View Composer Tools Window Help

9 5/8" Intermediate Casing

Pressure Test

Triaxial Results

	Depth (MD) (usft)	Axial Force (lbf) Apparent (w/Bending)	Axial Force (lbf) Actual (w/o Bending)	Equivalent Axial Load (lbf)	Bending Stress at OD (psi)	Absolute Safety Factor Triaxial	Absolute Safety Factor Burst	Absolute Safety Factor Collapse (V)	Absolute Safety Factor Axial	Temperature (°F)	Pressure (psi) Internal	Pressure (psi) External	Addt'l Pickup To Prevent Buck. (lbf)	Buckled Length (usft)
1	0	252987	228954	253140	2098.2	1.69	1.58	N/A	2.82 F	70.00	2500.00	0.00	N/A	N/A
2	100	247735	223702	248466	2098.2	1.69	1.58	N/A	2.88 F	71.10	2543.63	43.63		
3	100	234996	223701	235716	986.2	1.71	1.58	N/A	3.04 F	71.10	2543.64	43.64		
4	1700	341565	139667	352253	17627.2	1.53	1.57	N/A	2.09 F	88.70	3241.64	741.64		
5	1700	312979	139666	323488	15131.5	1.58	1.57	N/A	2.28 F	88.70	3241.65	741.65		
6	1850	336881	132027	348440	17885.2	1.51	1.57	N/A	2.12 F	90.29	3305.05	805.05		
7	1850	318549	132027	329984	16284.8	1.54	1.57	N/A	2.24 F	90.29	3305.06	805.06		
8	1950	320468	127243	332475	16869.9	1.52	1.57	N/A	2.23 F	91.30	3344.87	844.87		
9	1950	312802	127243	324756	16200.7	1.53	1.57	N/A	2.28 F	91.30	3344.87	844.87		
10	2050	307858	122773	320295	16159.3	1.52	1.57	N/A	2.32 F	92.23	3381.89	881.89		
11	2050	303560	122772	315965	15784.1	1.53	1.57	N/A	2.35 F	92.23	3381.89	881.89		
12	2300	151294	112633	163658	3375.4	1.71	1.57	N/A	4.72 F	94.35	3466.13	966.13		
13	2300	132741	112633	144956	1755.6	1.72	1.57	N/A	5.38 F	94.35	3466.14	966.14		
14	2370	129966	109858	142452	1755.6	1.72	1.57	N/A	5.49 F	94.94	3489.28	989.28		
15	2370	127909	107800	140922	1755.6	1.75	1.60	N/A	5.58 F	94.94	3489.29	1036.40		
16	2700	105515	94232	119785	985.1	1.75	1.60	N/A	6.77 F	97.73	3599.97	1152.35		
17	2700	111680	94231	126006	1523.4	1.75	1.60	N/A	6.39 F	97.73	3599.97	1152.35		
18	3100	110766	77783	126839	2879.6	1.71	1.60	N/A	6.44 F	101.11	3734.23	1293.00		
19	3100	97392	77783	113331	1712.1	1.73	1.60	N/A	7.33 F	101.11	3734.23	1293.01		
20	3700	71565	53303	89806	1594.4	1.70	1.61	N/A	9.97 F	106.15	3934.24	1502.54		
21	3700	60887	53302	79004	662.3	1.71	1.61	N/A	11.72 F	106.16	3934.25	1502.55		
22	4650	34671	14219	56495	1785.6	1.64	1.61	N/A	20.59 F	114.20	4253.37	1836.86		
23	4900	44595	4828	67626	3472.0	1.59	1.61	N/A	16.01 F	116.32	4337.37	1924.87		
24	4900	28975	4828	51775	2108.2	1.62	1.61	N/A	24.64 F	116.32	4337.38	1924.87		
25	5029	22103	34	45340	1926.8	1.61	1.61	N/A	32.30 F	117.40	4380.40	1969.94		
26	5029	22102	33	45339	1926.8	1.61	1.61	N/A	32.30 F	117.40	4380.41	1969.95		
27	5600	-45329	-21341	-20805	2094.3	1.57	1.62	N/A	(13.67)	122.23	4572.11	2170.78		
28	5650	-40465	-23210	-15657	1506.5	1.58	1.62	N/A	(15.31)	122.66	4588.87	2188.34		
29														
30	F	Conn Fracture												
31	( )	Compression												
32	(V)	Vector Collapse Safety Factor												
33														

Working / Config / Min SF / Load/SF / DF Summary / VME / Wallplot

For Help, press F1

Default Datum @ 0.00 usft | API - US Survey Feet | jqriffin2

9-5/8" Intermediate Casing Pressure Test:
Internal Profile based off Surface Pressure + Hydrostatic: 4589 psi
External Profile based off Pore Pressure: 2188 psi

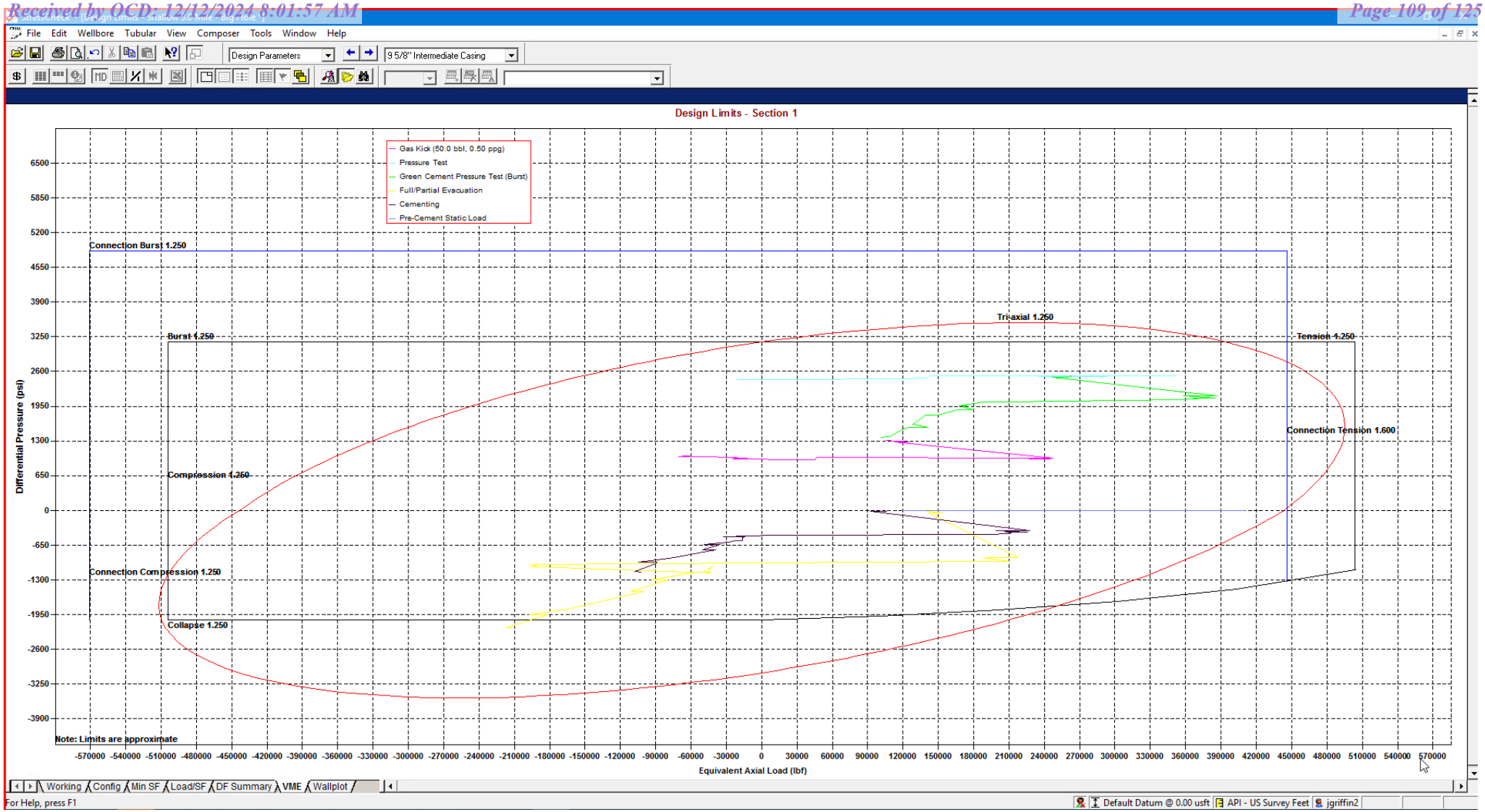

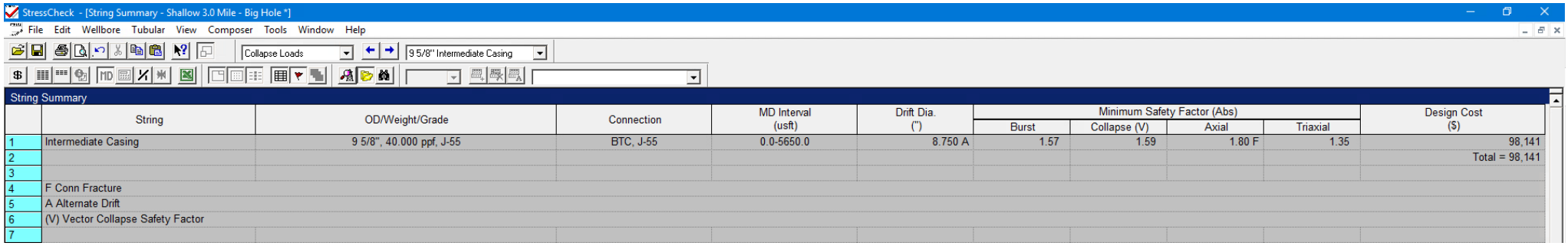

	String	OD/Weight/Grade	Connection	MD Interval (usft)	Drift Dia. (")	Minimum Safety Factor (Abs)				Design Cost ($)
						Burst	Collapse (V)	Axial	Triaxial	
1	Intermediate Casing	9 5/8", 40.000 ppf, J-55	BTC, J-55	0.0-5650.0	8.750 A	1.57	1.59	1.80 F	1.35	98,141
2										Total = 98,141
3										
4	F Conn Fracture									
5	A Alternate Drift									
6	(V) Vector Collapse Safety Factor									
7										

*Modelling done with 9-5/8" 40# Intermediate Casing. Passes all Burst, Collapse and Tensile design criteria.

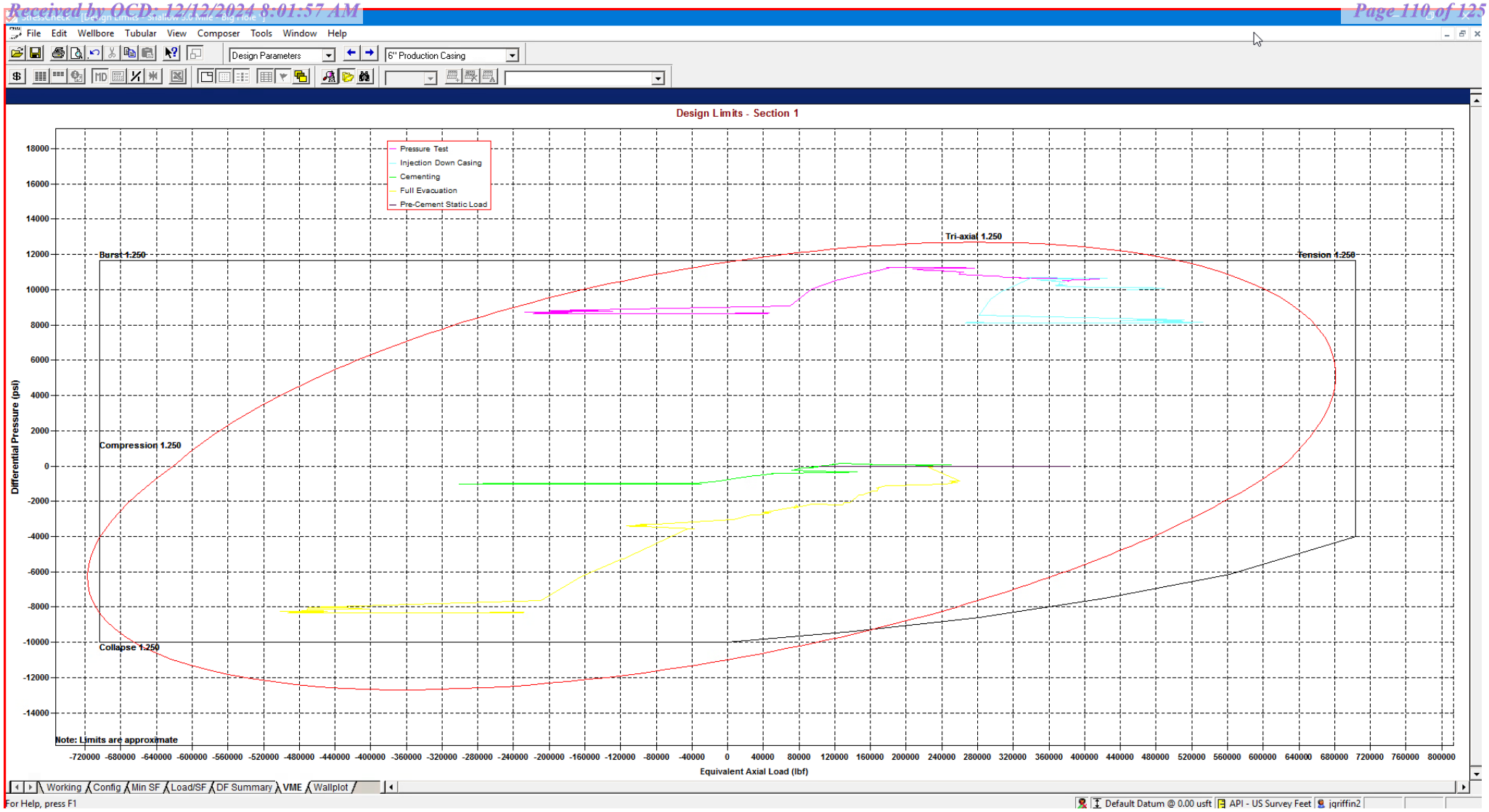

StressCheck - [String Summary - Shallow 3.0 Mile - Big Hole *]

String Summary

	String	OD/Weight/Grade	Connection	MD Interval (usft)	Drift Dia. (")	Minimum Safety Factor (Abs)				Design Cost ($)
						Burst	Collapse (V)	Axial	Triaxial	
1	Production Casing	6", 24.500 ppf, P110 ICY	BTC, P110 ICY	0.0-28578.0	5.075	1.29	1.52	(1.75)	1.37	541,493
2										Total = 541,493
3										
4	( ) Compression									
5	(V) Vector Collapse Safety Factor									
6										

*Modelling done with 6" Production Casing with a 125ksi Control Yield. Passes all Burst, Collapse and Tensile design criteria.

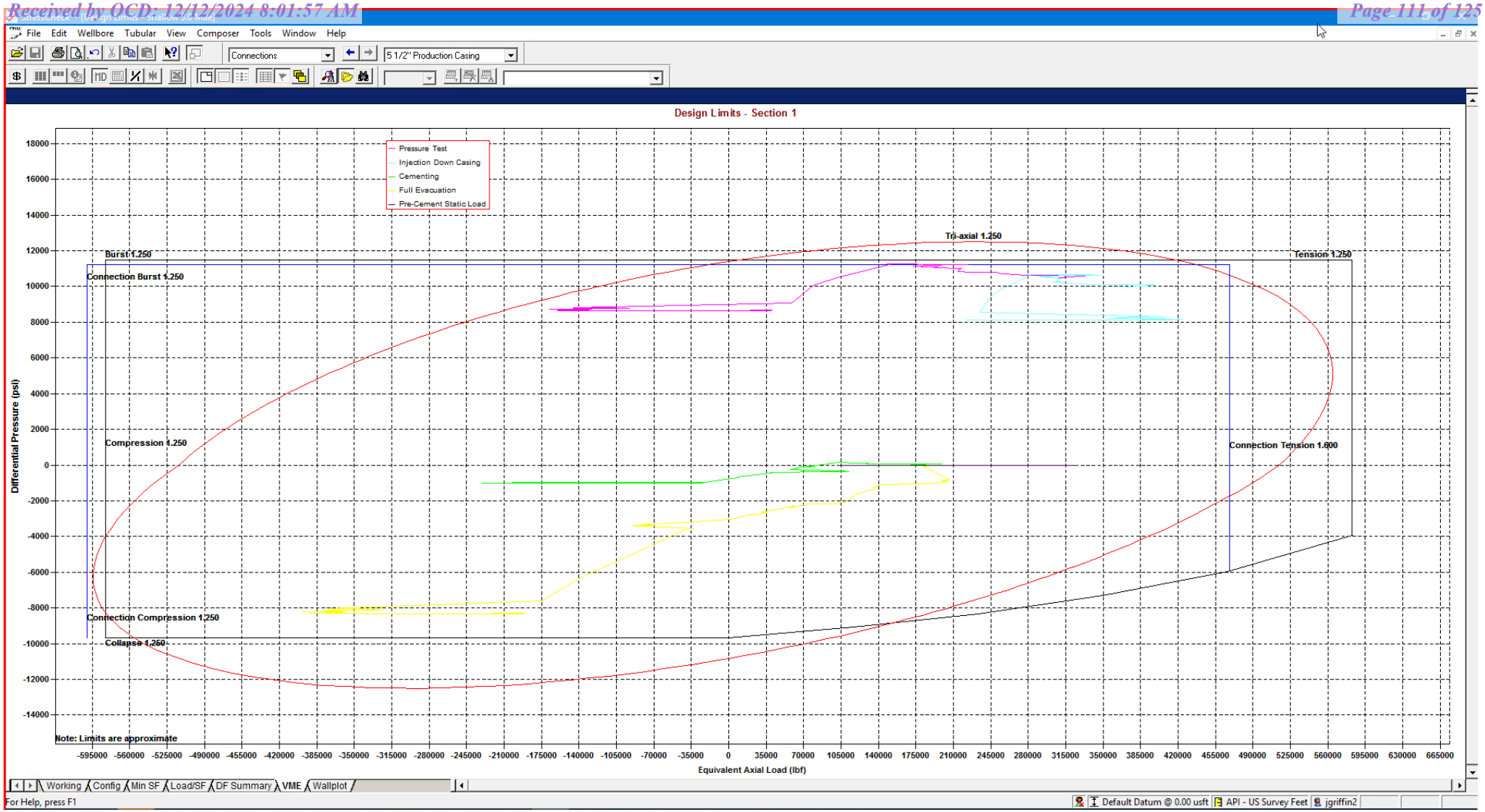

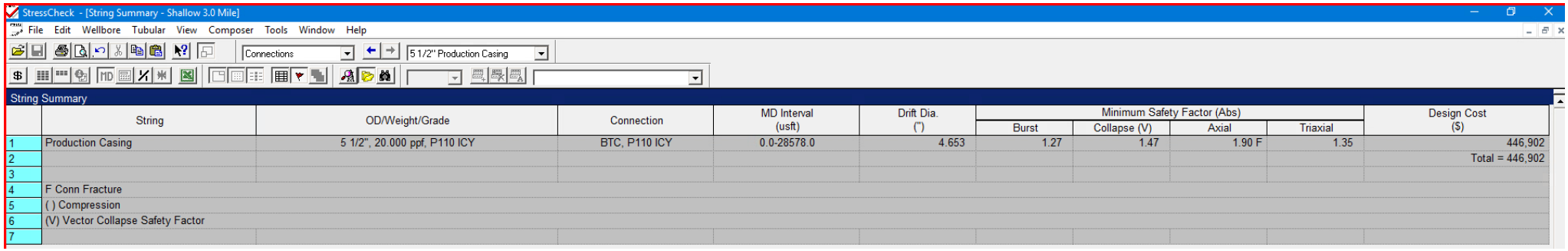

	String	OD/Weight/Grade	Connection	MD Interval (usft)	Drift Dia. (")	Minimum Safety Factor (Abs)				Design Cost ($)
						Burst	Collapse (V)	Axial	Triaxial	
1	Production Casing	5 1/2", 20.000 ppf, P110 ICY	BTC, P110 ICY	0.0-28578.0	4.653	1.27	1.47	1.90 F	1.35	446,902
2										Total = 446,902
3										
4	F Conn Fracture									
5	( ) Compression									
6	(V) Vector Collapse Safety Factor									
7										

*Modelling done with 5-1/2" 20# Production Casing with a 125ksi Control Yield. Passes all Burst, Collapse and Tensile design criteria.

eog resources

Shallow Casing Design 501H

Additive	Purpose
Bentonite Gel	Lightweight/Lost circulation prevention
Calcium Chloride	Accelerator
Cello-flake	Lost circulation prevention
Sodium Metasilicate	Accelerator
MagOx	Expansive agent
Pre-Mag-M	Expansive agent
Sodium Chloride	Accelerator
FL-62	Fluid loss control
Halad-344	Fluid loss control
Halad-9	Fluid loss control
HR-601	Retarder
Microbond	Expansive Agent

Cement integrity tests will be performed immediately following plug bump.

Note: Cement volumes based on bit size plus at least 25% excess in the open hole plus 10% excess in the cased-hole overlap section.

EOG requests variance from minimum standards to pump a two stage cement job on the production casing string with the first stage being pumped conventionally with the calculated top of cement at the top of the Brushy Canyon and the second stage performed as a 1000 sack bradenhead squeeze with planned cement from the Brushy Canyon to surface. If necessary, a top out consisting of 400 sacks of Class C cement + 3% Salt + 1% PreMag-M + 6% Bentonite Gel (1.32 yld, 14.8 ppg) will be executed as a contingency. Top will be verified by Echo-meter.

Bradenhead will be the primary option for production cementing. EOG also requests to have the conventional option in place to accommodate for logistical or wellbore conditions. The tie back requirements will be met if the cement is pumped conventionally, and cement volumes will be adjusted accordingly. TOC will be verified by CBL.

eog resources

MUD PROGRAM:

During this procedure we plan to use a Closed-Loop System and haul contents to the required disposal. The applicable depths and properties of the drilling fluid systems are as follows:

Measured Depth	Type	Weight (ppg)	Viscosity	Water Loss
0 – 2,030'	Fresh - Gel	8.6-8.8	28-34	N/c
2,030' – 7,793'	Brine	9-10.5	28-34	N/c
5,450' – 28,578' Lateral	Oil Base	8.8-9.5	58-68	N/c - 6

An electronic pit volume totalizer (PVT) will be utilized on the circulating system, to monitor pit volume, flow rate, pump pressure and stroke rate.

Sufficient mud materials to maintain mud properties and meet minimum lost circulation and weight increase requirements will be kept at the wellsite at all times.

eog resources

Appendix A - Spec Sheets

Pipe Body and API Connections Performance Data

13.375 54.50/0.380 J55

PDF

New Search »

« Back to Previous List

USC Metric

6/8/2015 10:04:37 AM

Mechanical Properties	Pipe	BTC	LTC	STC	
Minimum Yield Strength	55,000	--	--	--	psi
Maximum Yield Strength	80,000	--	--	--	psi
Minimum Tensile Strength	75,000	--	--	--	psi
Dimensions	**Pipe**	**BTC**	**LTC**	**STC**	
Outside Diameter	13.375	14.375	--	14.375	in.
Wall Thickness	0.380	--	--	--	in.
Inside Diameter	12.615	12.615	--	12.615	in.
Standard Drift	12.459	12.459	--	12.459	in.
Alternate Drift	--	--	--	--	in.
Nominal Linear Weight, T&C	54.50	--	--	--	lbs/ft
Plain End Weight	52.79	--	--	--	lbs/ft
Performance	**Pipe**	**BTC**	**LTC**	**STC**	
Minimum Collapse Pressure	1,130	1,130	--	1,130	psi
Minimum Internal Yield Pressure	2,740	2,740	--	2,740	psi
Minimum Pipe Body Yield Strength	853.00	--	--	--	1000 lbs
Joint Strength	--	909	--	514	1000 lbs
Reference Length	--	11,125	--	6,290	ft
Make-Up Data	**Pipe**	**BTC**	**LTC**	**STC**	
Make-Up Loss	--	4.81	--	3.50	in.
Minimum Make-Up Torque	--	--	--	3,860	ft-lbs
Maximum Make-Up Torque	--	--	--	6,430	ft-lbs

Received by OCD: 12/12/2024 8:01:57 AM

Pipe Body and API Connections Performance Data

9.625 40.00/0.395 J55

PDF

New Search »

« Back to Previous List

USC Metric

6/8/2015 10:23:27 AM

Mechanical Properties	Pipe	BTC	LTC	STC	
Minimum Yield Strength	55,000	--	--	--	psi
Maximum Yield Strength	80,000	--	--	--	psi
Minimum Tensile Strength	75,000	--	--	--	psi
Dimensions	**Pipe**	**BTC**	**LTC**	**STC**	
Outside Diameter	9.625	10.625	10.625	10.625	in.
Wall Thickness	0.395	--	--	--	in.
Inside Diameter	8.835	8.835	8.835	8.835	in.
Standard Drift	8.679	8.679	8.679	8.679	in.
Alternate Drift	8.750	8.750	8.750	8.750	in.
Nominal Linear Weight, T&C	40.00	--	--	--	lbs/ft
Plain End Weight	38.97	--	--	--	lbs/ft
Performance	**Pipe**	**BTC**	**LTC**	**STC**	
Minimum Collapse Pressure	2,570	2,570	2,570	2,570	psi
Minimum Internal Yield Pressure	3,950	3,950	3,950	3,950	psi
Minimum Pipe Body Yield Strength	630.00	--	--	--	1000 lbs
Joint Strength	--	714	520	452	1000 lbs
Reference Length	--	11,898	8,665	7,529	ft
Make-Up Data	**Pipe**	**BTC**	**LTC**	**STC**	
Make-Up Loss	--	4.81	4.75	3.38	in.
Minimum Make-Up Torque	--	--	3,900	3,390	ft-lbs
Maximum Make-Up Torque	--	--	6,500	5,650	ft-lbs

Released to Imaging: 12/30/2024 11:40:54 AM

VAM USA

DWC/C-IS MS™

Connection Data Sheet

OD (in.)	WEIGHT (lbs./ft.)	WALL (in.)	GRADE	API DRIFT (in.)	RBW%	CONNECTION
5.500	Nominal: 20.00 Plain End: 19.83	0.361	VST P110EC	4.653	87.5	DWC/C-IS MS

PIPE PROPERTIES		
Outside Diameter	5.500	in.
Inside Diameter	4.778	in.
Nominal Area	5.828	sq.in.
Grade Type	API 5CT	
Min. Yield Strength	125	ksi
Max. Yield Strength	140	ksi
Min. Tensile Strength	135	ksi
Yield Strength	729	klb
Ultimate Strength	787	klb
Min. Internal Yield	14,360	psi
Collapse	12,090	psi

CONNECTION PROPERTIES		
Connection Type	Semi-Premium T&C	
Connection O.D. (nom)	6.115	in.
Connection I.D. (nom)	4.778	in.
Make-Up Loss	4.125	in.
Coupling Length	9.250	in.
Critical Cross Section	5.828	sq.in.
Tension Efficiency	100.0%	of pipe
Compression Efficiency	100.0%	of pipe
Internal Pressure Efficiency	100.0%	of pipe
External Pressure Efficiency	100.0%	of pipe

CONNECTION PERFORMANCES		
Yield Strength	729	klb
Parting Load	787	klb
Compression Rating	729	klb
Min. Internal Yield	14,360	psi
External Pressure	12,090	psi
Maximum Uniaxial Bend Rating	104.2	°/100 ft
Reference String Length w 1.4 Design Factor	26,040	ft

FIELD END TORQUE VALUES		
Min. Make-up torque	16,100	ft.lb
Opti. Make-up torque	17,350	ft.lb
Max. Make-up torque	18,600	ft.lb
Min. Shoulder Torque	1,610	ft.lb
Max. Shoulder Torque	12,880	ft.lb
Min. Delta Turn	-	Turns
Max. Delta Turn	0.200	Turns
Maximum Operational Torque	21,100	ft.lb
Maximum Torsional Value (MTV)	23,210	ft.lb

Need Help? Contact: tech.support@vam-usa.com

Reference Drawing: 8136PP Rev.01 & 8136BP Rev.01

Date: 12/03/2019

Time: 06:19:27 PM

For detailed information on performance properties, refer to DWC Connection Data Notes on following page(s).

Connection specifications within the control of VAM USA were correct as of the date printed. Specifications are subject to change without notice. Certain connection specifications are dependent on the mechanical properties of the pipe. Mechanical properties of mill proprietary pipe grades were obtained from mill publications and are subject to change. Properties of mill proprietary grades should be confirmed with the mill. Users are advised to obtain current connection specifications and verify pipe mechanical properties for each application.

All information is provided by VAM USA or its affiliates at user's sole risk, without liability for loss, damage or injury resulting from the use thereof; and on an "AS IS" basis without warranty or representation of any kind, whether express or implied, including without limitation any warranty of merchantability, fitness for purpose or completeness. This document and its contents are subject to change without notice. In no event shall VAM USA or its affiliates be responsible for any indirect, special, incidental, punitive, exemplary or consequential loss or damage (including without limitation, loss of use, loss of bargain, loss of revenue, profit or anticipated profit) however caused or arising, and whether such losses or damages were foreseeable or VAM USA or its affiliates was advised of the possibility of such damages.

VAM USA
2107 CityWest Boulevard Suite 1300
Houston, TX 77042
Phone: 713-479-3200
Fax: 713-479-3234
VAM® USA Sales E-mail: VAMUSAsales@vam-usa.com
Tech Support Email: tech.support@vam-usa.com

DWC Connection Data Sheet Notes:
1. DWC connections are available with a seal ring (SR) option.
2. All standard DWC/C connections are interchangeable for a given pipe OD. DWC connections are interchangeable with DWC/C-SR connections of the same OD and wall.
3. Connection performance properties are based on nominal pipe body and connection dimensions.
4. DWC connection internal and external pressure resistance is calculated using the API rating for buttress connections. API Internal pressure resistance is calculated from formulas 31, 32, and 35 in the API Bulletin 5C3.
5. DWC joint strength is the minimum pipe body yield strength multiplied by the connection critical area.
6. API joint strength is for reference only. It is calculated from formulas 42 and 43 in the API Bulletin 5C3.
7. Bending efficiency is equal to the compression efficiency.
8. The torque values listed are recommended. The actual torque required may be affected by field conditions such as temperature, thread compound, speed of make-up, weather conditions, etc.
9. Connection yield torque is not to be exceeded.
10. Reference string length is calculated by dividing the joint strength by both the nominal weight in air and a design factor (DF) of 1.4. These values are offered for reference only and do not include load factors such as bending, buoyancy, temperature, load dynamics, etc.
11. DWC connections will accommodate API standard drift diameters.
12. DWC/C family of connections are compatible with API Buttress BTC connections. Please contact tech.support@vam-usa.com for details on connection ratings and make-up.

Connection specifications within the control of VAM USA were correct as of the date printed. Specifications are subject to change without notice. Certain connection specifications are dependent on the mechanical properties of the pipe. Mechanical properties of mill proprietary pipe grades were obtained from mill publications and are subject to change. Properties of mill proprietary grades should be confirmed with the mill. Users are advised to obtain current connection specifications and verify pipe mechanical properties for each application.

All information is provided by VAM USA or its affiliates at user's sole risk, without liability for loss, damage or injury resulting from the use thereof; and on an "AS IS" basis without warranty or representation of any kind, whether express or implied, including without limitation any warranty of merchantability, fitness for purpose or completeness. This document and its contents are subject to change without notice. In no event shall VAM USA or its affiliates be responsible for any indirect, special, incidental, punitive, exemplary or consequential loss or damage (including without limitation, loss of use, loss of bargain, loss of revenue, profit or anticipated profit) however caused or arising, and whether such losses or damages were foreseeable or VAM USA or its affiliates was advised of the possibility of such damages.

Received by OCD: 12/12/2024 8:01:37 AM

Pipe Body and API Connections Performance Data

10.750 40.50/0.350 J55

PDF

New Search »

« Back to Previous List

USC Metric

6/8/2015 10:14:05 AM

Mechanical Properties	Pipe	BTC	LTC	STC	
Minimum Yield Strength	55,000	--	--	--	psi
Maximum Yield Strength	80,000	--	--	--	psi
Minimum Tensile Strength	75,000	--	--	--	psi
Dimensions	**Pipe**	**BTC**	**LTC**	**STC**	
Outside Diameter	10.750	11.750	--	11.750	in.
Wall Thickness	0.350	--	--	--	in.
Inside Diameter	10.050	10.050	--	10.050	in.
Standard Drift	9.894	9.894	--	9.894	in.
Alternate Drift	--	--	--	--	in.
Nominal Linear Weight, T&C	40.50	--	--	--	lbs/ft
Plain End Weight	38.91	--	--	--	lbs/ft
Performance	**Pipe**	**BTC**	**LTC**	**STC**	
Minimum Collapse Pressure	1,580	1,580	--	1,580	psi
Minimum Internal Yield Pressure	3,130	3,130	--	3,130	psi
Minimum Pipe Body Yield Strength	629.00	--	--	--	1000 lbs
Joint Strength	--	700	--	420	1000 lbs
Reference Length	--	11,522	--	6,915	ft
Make-Up Data	**Pipe**	**BTC**	**LTC**	**STC**	
Make-Up Loss	--	4.81	--	3.50	in.
Minimum Make-Up Torque	--	--	--	3,150	ft-lbs
Maximum Make-Up Torque	--	--	--	5,250	ft-lbs

Released to Imaging: 12/30/2024 11:40:54 AM

VALLOUREC STAR 8.625 32# J55 S S2L2 DA 7.875 W/O# SLN # PO# MADE IN USA FT LB

vallourec

API 5CT, 10th Ed. Connection Data Sheet

O.D. (in)	WEIGHT (lb/ft)	WALL (in)	GRADE	*API DRIFT (in)	RBW %
8.625	Nominal: 32.00 Plain End: 31.13	0.352	J55	7.796	87.5

Material Properties (PE)

Pipe	
Minimum Yield Strength:	55 ksi
Maximum Yield Strength:	80 ksi
Minimum Tensile Strength:	75 ksi
Coupling	
Minimum Yield Strength:	55 ksi
Maximum Yield Strength:	80 ksi
Minimum Tensile Strength:	75 ksi

Pipe Body Data (PE)

Geometry	
Nominal ID:	7.92 inch
Nominal Area:	9.149 in^2
*Special/Alt. Drift:	7.875 inch
Performance	
Pipe Body Yield Strength:	503 kips
Collapse Resistance:	2,530 psi
Internal Yield Pressure: (API Historical)	3,930 psi

API Connection Data

Coupling OD: 9.625"

STC Performance	
STC Internal Pressure:	3,930 psi
STC Joint Strength:	372 kips
LTC Performance	
LTC Internal Pressure:	3,930 psi
LTC Joint Strength:	417 kips
SC-BTC Performance - Cplg OD = 9.125"	
BTC Internal Pressure:	3,930 psi
BTC Joint Strength:	503 kips

API Connection Torque

STC Torque (ft-lbs)

Min:	2,793	Opti:	3,724	Max:	4,655

LTC Torque (ft-lbs)

Min:	3,130	Opti:	4,174	Max:	5,217

BTC Torque (ft-lbs)

follow API guidelines regarding positional make up

*Alt. Drift will be used unless API Drift is specified on order.

**If above API connections do not suit your needs, VAM® premium connections are available up to 100% of pipe body ratings.

ALL INFORMATION IS PROVIDED BY VALLOUREC OR ITS AFFILIATES AT USER'S SOLE RISK, WITHOUT LIABILITY FOR LOSS, DAMAGE OR INJURY RESULTING FROM THE USE THEREOF; AND ON AN "AS IS" BASIS WITHOUT WARRANTY OR REPRESENTATION OF ANY KIND, WHETHER EXPRESS OR IMPLIED, INCLUDING WITHOUT LIMITATION ANY WARRANTY OF MERCHANTABILITY, FITNESS FOR PURPOSE, ACCURACY OR COMPLETENESS. THE INFORMATION CONTAINED IN THIS DOCUMENT IS PROVIDED FOR INFORMATIONAL PURPOSES ONLY AND IS BASED ON ESTIMATES THAT HAVE NOT BEEN VERIFIED OR TESTED. IN NO EVENT SHALL VALLOUREC OR ITS AFFILIATES BE RESPONSIBLE FOR ANY INDIRECT, SPECIAL, INCIDENTAL, PUNITIVE, EXEMPLARY OR CONSEQUENTIAL LOSS OR DAMAGE (INCLUDING WITHOUT LIMITATION, LOSS OF USE, LOSS OF BARGAIN, LOSS OF REVENUE, PROFIT OR ANTICIPATED PROFIT) HOWEVER CAUSED OR ARISING, AND WHETHER SUCH LOSSES OR DAMAGES WERE FORESEEABLE OR VALLOUREC OR ITS AFFILIATES WERE ADVISED OF THE POSSIBILITY OF SUCH DAMAGES.

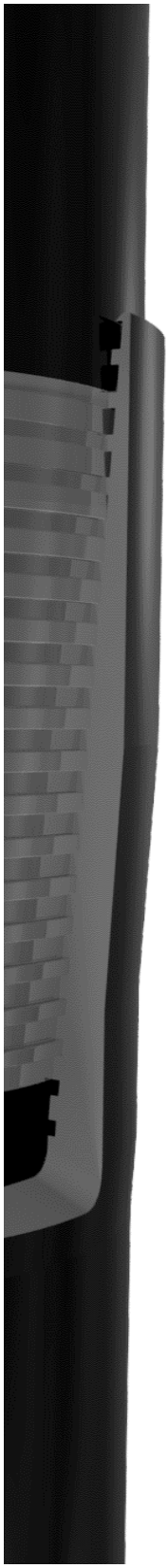

Issued on: 10 Feb. 2021 by Wesley Ott

VAM® SPRINT-SF
Connection Data Sheet

OD	Weight (lb/ft)	Wall Th.	Grade	API Drift:	Connection
6 in.	Nominal: 24.50 Plain End: 23.95	0.400 in.	P110EC	5.075 in.	**VAM® SPRINT-SF**

PIPE PROPERTIES		
Nominal OD	6.000	in.
Nominal ID	5.200	in.
Nominal Cross Section Area	7.037	sqin.
Grade Type		High Yield
Min. Yield Strength	125	ksi
Max. Yield Strength	140	ksi
Min. Ultimate Tensile Strength	135	ksi

CONNECTION PROPERTIES		
Connection Type		Integral Semi-Flush
Connection OD (nom):	6.277	in.
Connection ID (nom):	5.146	in.
Make-Up Loss	5.386	in.
Critical Cross Section	6.417	sqin.
Tension Efficiency	91.0	% of pipe
Compression Efficiency	91.0	% of pipe
Internal Pressure Efficiency	100	% of pipe
External Pressure Efficiency	100	% of pipe

CONNECTION PERFORMANCES		
Tensile Yield Strength	801	klb
Compression Resistance	801	klb
Internal Yield Pressure	14,580	psi
Collapse Resistance	12,500	psi
Max. Structural Bending	83	°/100ft
Max. Bending with ISO/API Sealability	30	°/100ft

* 87.5% RBW

TORQUE VALUES		
Min. Make-up torque	21,750	ft.lb
Opt. Make-up torque	24,250	ft.lb
Max. Make-up torque	26,750	ft.lb
Max. Torque with Sealability (MTS)	53,000	ft.lb

VAM® SPRINT-SF is a semi-flush connection innovatively designed for extreme shale applications. Its high tension rating and ultra high torque capacity make it ideal to run a fill string length as production casing in shale wells with extended horizontal sections and tight clearance requirements.

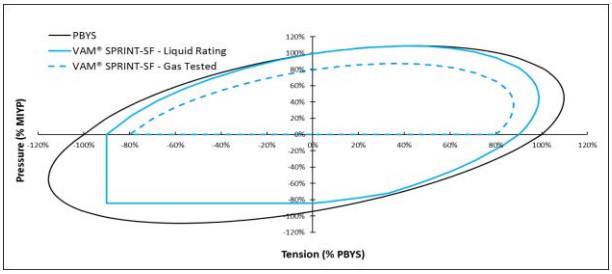

Do you need help on this product? - Remember no one knows VAM® like VAM®

canada@vamfieldservice.com
usa@vamfieldservice.com
mexico@vamfieldservice.com
brazil@vamfieldservice.com

uk@vamfieldservice.com
dubai@vamfieldservice.com
nigeria@vamfieldservice.com
angola@vamfieldservice.com

china@vamfieldservice.com
baku@vamfieldservice.com
singapore@vamfieldservice.com
australia@vamfieldservice.com

Over 140 VAM® Specialists available worldwide 24/7 for Rig Site Assistance

DWC/C-IS™

Connection Data Sheet

OD (in.)	WEIGHT (lbs./ft.)	WALL (in.)	GRADE	API DRIFT (in.)	RBW%	CONNECTION
6.000	Nominal: 22.30 Plain End: 21.70	0.360	VST P110EC	5.155	92.5	DWC/C-IS

PIPE PROPERTIES

Nominal OD	6.000	in.
Nominal ID	5.280	in.
Nominal Area	6.379	sq.in.
Grade Type	API 5CT	
Min. Yield Strength	125	ksi
Max. Yield Strength	140	ksi
Min. Tensile Strength	135	ksi
Yield Strength	797	klb
Ultimate Strength	861	klb
Min. Internal Yield Pressure	13,880	psi
Collapse Pressure	9,800	psi

CONNECTION PROPERTIES

Connection Type	Semi-Premium T&C	
Connection OD (nom)	6.650	in.
Connection ID (nom)	5.280	in.
Make-Up Loss	4.313	in.
Coupling Length	9.625	in.
Critical Cross Section	6.379	sq.in.
Tension Efficiency	100.0%	of pipe
Compression Efficiency	100.0%	of pipe
Internal Pressure Efficiency	100.0%	of pipe
External Pressure Efficiency	100.0%	of pipe

CONNECTION PERFORMANCES

Yield Strength	797	klb
Parting Load	861	klb
Compression Rating	797	klb
Min. Internal Yield	13,880	psi
External Pressure	9,800	psi
Maximum Uniaxial Bend Rating	47.7	°/100 ft
Reference String Length w 1.4 Design Factor	25,530	ft.

FIELD END TORQUE VALUES

Min. Make-up torque	17,000	ft.lb
Opti. Make-up torque	18,250	ft.lb
Max. Make-up torque	19,500	ft.lb
Min. Shoulder Torque	1,700	ft.lb
Max. Shoulder Torque	13,600	ft.lb
Min. Delta Turn	-	Turns
Max. Delta Turn	0.200	Turns
Maximum Operational Torque	24,200	ft.lb
Maximum Torsional Value (MTV)	26,620	ft.lb

Need Help? Contact: tech.support@vam-usa.com

Reference Drawing: 8135PP Rev.02 & 8135BP Rev.02

Date: 07/30/2020

Time: 07:50:47 PM

For detailed information on performance properties, refer to DWC Connection Data Notes on following page(s).

Connection specifications within the control of VAM USA were correct as of the date printed. Specifications are subject to change without notice. Certain connection specifications are dependent on the mechanical properties of the pipe. Mechanical properties of mill proprietary pipe grades were obtained from mill publications and are subject to change. Properties of mill proprietary grades should be confirmed with the mill. Users are advised to obtain current connection specifications and verify pipe mechanical properties for each application.

All information is provided by VAM USA or its affiliates at user's sole risk, without liability for loss, damage or injury resulting from the use thereof; and on an "AS IS" basis without warranty or representation of any kind, whether express or implied, including without limitation any warranty of merchantability, fitness for purpose or completeness. This document and its contents are subject to change without notice. In no event shall VAM USA or its affiliates be responsible for any indirect, special, incidental, punitive, exemplary or consequential loss or damage (including without limitation, loss of use, loss of bargain, loss of revenue, profit or anticipated profit) however caused or arising, and whether such losses or damages were foreseeable or VAM USA or its affiliates was advised of the possibility of such damages.

VAM® USA

VAM USA
2107 CityWest Boulevard Suite 1300
Houston, TX 77042
Phone: 713-479-3200
Fax: 713-479-3234
VAM® USA Sales E-mail: VAMUSAsales@vam-usa.com
Tech Support Email: tech.support@vam-usa.com

DWC Connection Data Sheet Notes:
1. DWC connections are available with a seal ring (SR) option.
2. All standard DWC/C connections are interchangeable for a given pipe OD. DWC connections are interchangeable with DWC/C-SR connections of the same OD and wall.
3. Connection performance properties are based on nominal pipe body and connection dimensions.
4. DWC connection internal and external pressure resistance is calculated using the API rating for buttress connections. API Internal pressure resistance is calculated from formulas 31, 32, and 35 in the API Bulletin 5C3.
5. DWC joint strength is the minimum pipe body yield strength multiplied by the connection critical area.
6. API joint strength is for reference only. It is calculated from formulas 42 and 43 in the API Bulletin 5C3.
7. Bending efficiency is equal to the compression efficiency.
8. The torque values listed are recommended. The actual torque required may be affected by field conditions such as temperature, thread compound, speed of make-up, weather conditions, etc.
9. Connection yield torque is not to be exceeded.
10. Reference string length is calculated by dividing the joint strength by both the nominal weight in air and a design factor (DF) of 1.4. These values are offered for reference only and do not include load factors such as bending, buoyancy, temperature, load dynamics, etc.
11. DWC connections will accommodate API standard drift diameters.
12. DWC/C family of connections are compatible with API Buttress BTC connections. Please contact tech.support@vam-usa.com for details on connection ratings and make-up.

Connection specifications within the control of VAM USA were correct as of the date printed. Specifications are subject to change without notice. Certain connection specifications are dependent on the mechanical properties of the pipe. Mechanical properties of mill proprietary pipe grades were obtained from mill publications and are subject to change. Properties of mill proprietary grades should be confirmed with the mill. Users are advised to obtain current connection specifications and verify pipe mechanical properties for each application.

All information is provided by VAM USA or its affiliates at user's sole risk, without liability for loss, damage or injury resulting from the use thereof; and on an "AS IS" basis without warranty or representation of any kind, whether express or implied, including without limitation any warranty of merchantability, fitness for purpose or completeness. This document and its contents are subject to change without notice. In no event shall VAM USA or its affiliates be responsible for any indirect, special, incidental, punitive, exemplary or consequential loss or damage (including without limitation, loss of use, loss of bargain, loss of revenue, profit or anticipated profit) however caused or arising, and whether such losses or damages were foreseeable or VAM USA or its affiliates was advised of the possibility of such damages.

eog resources

Shallow Target Well Variances

EOG respectfully requests the below variances to be applied to this well:

- Variance is requested to waive the centralizer requirements for the intermediate casing in the intermediate hole. An expansion additive will be utilized, in the cement slurry, for the entire length of the intermediate interval to maximize cement bond and zonal isolation.
- Variance is also requested to waive the centralizer requirements for the production casing in the production hole. An expansion additive will be utilized, in the cement slurry, for the entire length of the production interval to maximize cement bond and zonal isolation.
- Bradenhead will be the primary option for production cementing. EOG also requests to have the conventional option in place to accommodate for logistical or wellbore conditions. The tie back requirements will be met if the cement is pumped conventionally, and cement volumes will be adjusted accordingly. TOC will be verified by CBL.

- Variance is requested to use a co-flex line between the BOP and choke manifold (instead of using a 4" OD steel line).
- Variance is requested to use a 5,000 psi annular BOP with the 10,000 psi BOP stack.
- EOG Resources requests the option to contract a Surface Rig to drill, set surface casing, and Cement on the subject well. After WOC 8 hours or 500 psi compressive strength (whichever is greater), the Surface Rig will move off so the wellhead can be installed. A welder will cut the casing to the proper height and weld on the wellhead (both "A" and "B" sections). The weld will be tested to 1,500 psi. All valves will be closed and a wellhead cap will be installed (diagram attached). If the timing between rigs is such that EOG Resources would not be able to preset the surface, the Primary Rig will MIRU and drill the well in its entirety per the APD.

EOG requests the additional variance(s) in the attached document(s):

- EOG BLM Variance 2a - Inermediate Bradenhead Cement
- EOG BLM Variance 3a_b - BOP Break-test and Offline Intermediate Cement
- EOG BLM Variance 4a - Salt Section Annular Clearance
- EOG BLM Variance 5a - Alternate Shallow Casing Designs

Sante Fe Main Office
Phone: (505) 476-3441

General Information
Phone: (505) 629-6116

Online Phone Directory
https://www.emnrd.nm.gov/ocd/contact-us

State of New Mexico
Energy, Minerals and Natural Resources
Oil Conservation Division
1220 S. St Francis Dr.
Santa Fe, NM 87505

CONDITIONS

Action 410939

CONDITIONS

Operator: EOG RESOURCES INC 5509 Champions Drive Midland, TX 79706	OGRID: 7377
	Action Number: 410939
	Action Type: [C-101] BLM - Federal/Indian Land Lease (Form 3160-3)

CONDITIONS

Created By	Condition	Condition Date
kayla_mcconnell	Cement is required to circulate on both surface and intermediate1 strings of casing.	12/12/2024
kayla_mcconnell	If cement does not circulate on any string, a Cement Bond Log (CBL) is required for that string of casing.	12/12/2024
pkautz	File As Drilled C-102 and a directional Survey with C-104 completion packet.	12/30/2024
pkautz	Once the well is spud, to prevent ground water contamination through whole or partial conduits from the surface, the operator shall drill without interruption through the fresh water zone or zones and shall immediately set in cement the water protection string.	12/30/2024
pkautz	Oil base muds are not to be used until fresh water zones are cased and cemented providing isolation from the oil or diesel. This includes synthetic oils. Oil based mud, drilling fluids and solids must be contained in a steel closed loop system.	12/30/2024