GW - 032

ENGINEERING DRAWINGS

Sanitary Treatment Pond

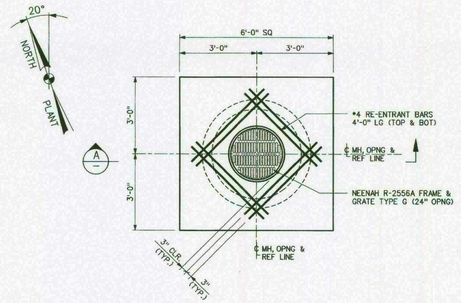

MANHOLE PLAN
SCALE: 1/2" = 1'-0"

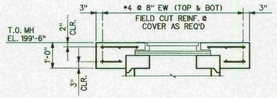

SECTION A
SCALE — 1/2" = 1'-0"

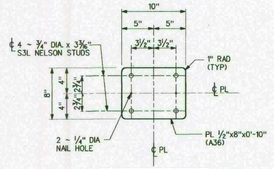

MK-Z84-03-192-2
EMBEDDED PLATE
(SHOP FAB.) (2 REQ'D) (GALV.)
SCALE: 1 1/2" = 1'-0"

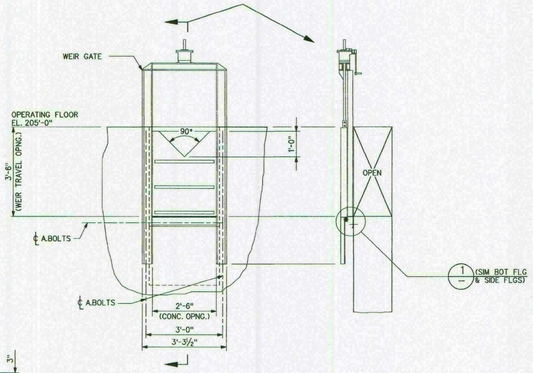

TYPICAL WEIR GATE
MOUNTING DETAIL
SCALE: 1/2" = 1'-0"

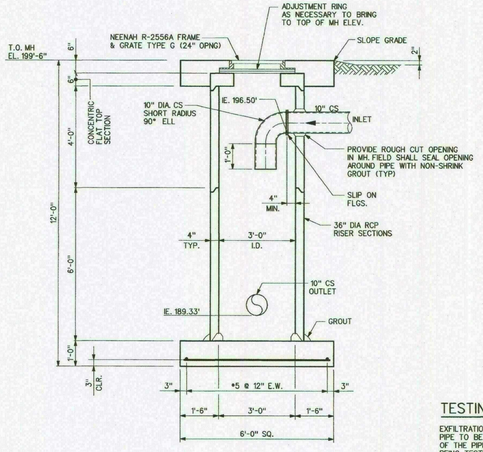

MANHOLE ELEVATION
SCALE: 1/2" = 1'-0"

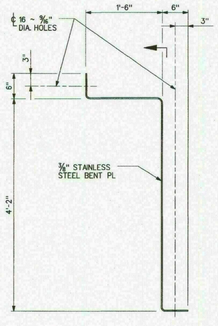

MK-Z84-03-192-1
UNDERFLOW BAFFLE
SCALE: 1" = 1'-0"
(SHOP FAB.) (2 REQ'D)

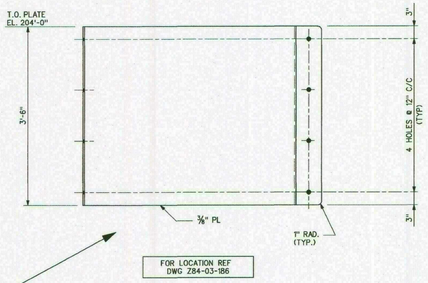

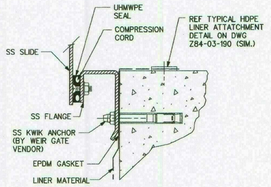

INSTALL WEIR GATE PER MANUFACTURER'S RECOMMENDED PROCEDURES

DETAIL 1
SCALE — N.T.S.

TESTING NOTE:

EXFILTRATION WILL BE MEASURED AT MANHOLE. THE SECTION OF PIPE TO BE TESTED WILL BE PLUGGED AT THE DOWNSTREAM END OF THE PIPE (E.G., AS AT MANHOLE) THE LATERALS IN THE SECTION BEING TESTED WILL BE PLUGGED WITH REMOVEABLE STOPPERS.

EXFILTRATION TESTS WILL BE CONDUCTED BY FILLING SECTIONS OF PIPE, FOUR HUNDRED (400) FEET(122M) MAXIMUM LENGTH AT A TIME, WITH WATER TO THE TOP OF THE MANHOLE, BUT NOT LESS THAN FIVE (5) FEET (1.5M) ABOVE THE TOP OF THE PIPE, IF REQUIRED, A STANDPIPE WILL BE USED TO BRING THE WATER LEVEL TO FIVE (5) FEET (1.5M) ABOVE THE TOP OF THE PIPE. LET WATER STAND FOUR (4) HOURS. REFILL MANHOLE AND MEASURE THE DROP AFTER ONE (1) HOUR. MAXIMUM EXFILTRATION WILL BE AS FOLLOWS:

- PROCESS SEWERS - NO MEASURABLE AMOUNT
- SANITARY SEWERS - 0.0008 GALLONS/IN. DIAMETER/FT./HR. (0.000037 LITERS/MM)

EXFILTRATION TESTING OF STORM SEWERS WILL BE DONE IN ACCORDANCE WITH ASTM C 969.

NOTES:

1. FOR LIST OF MATERIALS, REFERENCE DRAWINGS & NOTES REF DRAWING Z84-03-183.
2. WORK THIS DRAWING WITH DRAWINGS LISTED ON Z84-03-183.

REV.	REVISION DESCRIPTION	RFC No.	DATE
0	ISSUED FOR CONSTRUCTION		7/22/2011

CLAY H. WILLIS
NEW MEXICO
20364
PROFESSIONAL ENGINEER
7/22/11

THIS P.E. STAMP IS APPLICABLE TO THE CIVIL/STRUCTURAL PORTION OF THIS DRAWING ONLY

MUSTANG ENGINEERS AND CONSTRUCTORS, L.P.
PROJECT No. 18205

Western Refining
Gallup Refinery

STP-1 WASTE WATER POND
SECTIONS & DETAILS SHT-3
WASTE WATER TREATMENT PLANT

DRN. BY: HR	DATE: 6/5/11	RFE No:
CHK'D. BY: JAM	DATE: 7/21/11	CAD REF:
APP'D. BY: RLW	DATE: 7/25/11	
DRAWING NO. Z84-03-192		REV 0

herawii 7/21/2011 2:23:13 PM j:\18205\struct\drw\z84-03-192.dgn