SAGE ENERGY COMPANY
P. O. DRAWER 3068
MIDLAND, TEXAS 79702

915/683-5271

May 30, 1986

Case 8926

New Mexico Oil Conservation Commission
Energy and Mineral Department
P. O. Box 2088
Santa Fe, New Mexico 87501

Attn: David Catanach

Re: Application to convert Sage Energy's Lowe State No.1 to SWD facility.

Dear David:

Enclosed as part of the referenced application are four well injection data sheets with top of cement calculated for your information.

Also enclosed are copies of scout tickets showing information for producing wells in the area of interest.

Please call me if additional information is needed. Your assistance is appreciated.

Very truly yours,

Frances Holzgraf

Frances Holzgraf
Production Clerk

Amerada Hess St. S N Unit " 14

INJECTION WELL DATA SHEET

SIDE 1

AMERADA PETROLEUM CORPORATION	State S "N" Unit		
OPERATOR	LEASE		
14	2111' FNL and 660' FSL of Section	Sec. 3, T-15-S, R-33-E	Lea County, New Mexico
WELL NO.	FOOTAGE LOCATION	SECTION TOWNSHIP	RANGE

Schematic -WIW-

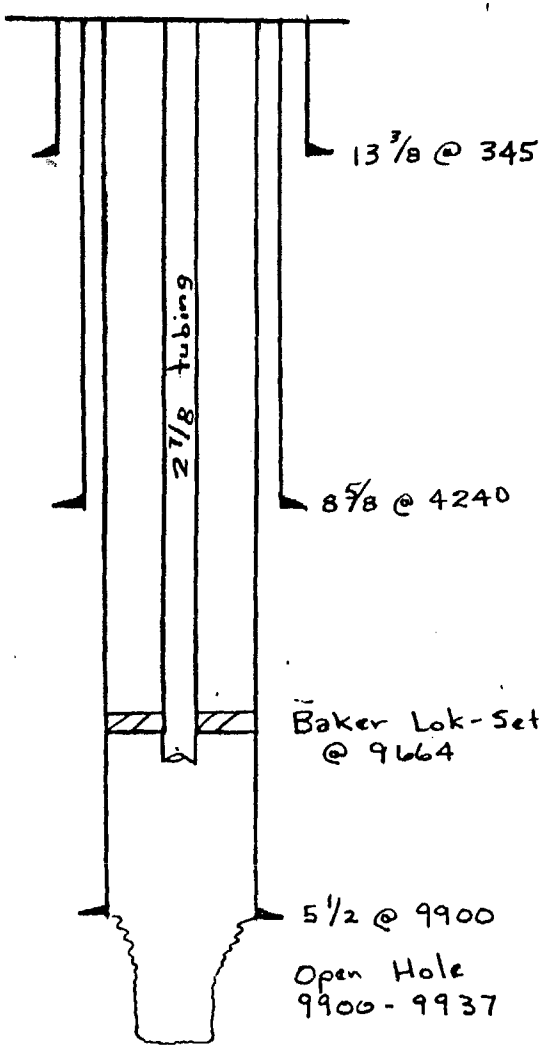

Tabular Data

Surface Casing

Size 13 3/8 " Cemented with 345 sx.

TOC surface feet determined by visual

Hole size 17 1/2

Intermediate Casing

Size 8 5/8 " Cemented with 500 sx.

TOC ~~?~~ 2962 feet determined by ? calculations

Hole size 12 1/4 "

Long string

Size 5 1/2 " Cemented with 400 sx.

TOC ~~?~~ 7463 feet determined by ? calculations

Hole size 7 7/8

total depth

Open Hole Size 4 5/8 "

Injection interval

_____ feet to _____ feet

(perforated or open-hole, indicate which)

Sec 3

COUNTY LEA, N.M. FIELD SAUNDERS (PENN)

OPR AMERADA PETROLEUM CORPORATION

LSE STATE S "N" UNIT WELL NO. 14

LOC Sec 3, T-15-S, R-33-E, 2221 FNL 660 FWL of Sec

OWWO-FRC

MAPS CO-ORD

F. R. 5-12-67 OBJ METHOD SPUD 4-16-67

CTR C. R. ELEV D. F. 4208

LOGS SPLS GL

TD 9990 li PBD 9937 ABD LOC P & A

PAY ZONE	TOP PAY	PRODUCING INTERVAL	IP	BO	W	BS&W	HRS	TEST BASIS
		WATER INJECTION WELL (OH)						

CHOKE	GOR	GTY	CP	TP	POT DATE	TREATMENT
					4-20-67	

CSG-TBG-PKR RECORD REACHED T. D.

13 3/8 - 345 - 350 5 1/2 - 9900 - 400

8 5/8 - 4240 - 500

COUNTY LEA, N.M. FIELD SAUNDERS (PENN)

WELL: AMERADA #14 STATE S "N" UNIT ELEV 4208 DF

DATE	WELL RECORD	SPL (LOG) MARKERS
	OTD 9990 li PBD 9937	Yates (2651)
	WIW 4-20-67	SA (4210)
	A/1000 OH 9900-37	Glor (5700)
		Tubbs (7500)
	(5-12-67)	Abo (7800)
		WC (9120)

The Subsurface Library
P. O. Box 942
Midland, Texas

NO. OF COPIES RECEIVED		
DISTRIBUTION		
SANTA FE		
FILE		
U.S.G.S.		
LAND OFFICE		
OPERATOR		

NEW MEXICO OIL CONSERVATION COMMISSION

Form C-103
Supersedes Old C-102 and C-103
Effective 1-1-65

5a. Indicate Type of Lease
State [X] Fee [ ]

5. State Oil & Gas Lease No.
B-9380

SUNDRY NOTICES AND REPORTS ON WELLS

(DO NOT USE THIS FORM FOR PROPOSALS TO DRILL OR TO DEEPEN OR PLUG BACK TO A DIFFERENT RESERVOIR. USE "APPLICATION FOR PERMIT —" (FORM C-101) FOR SUCH PROPOSALS.)

1. OIL WELL [X] GAS WELL [ ] OTHER-

7. Unit Agreement Name
—

2. Name of Operator
TEXACO Inc.

8. Farm or Lease Name
New Mexico "AO" Stat

3. Address of Operator
P. O. Box 728, Hobbs, New Mexico

9. Well No.
2

4. Location of Well
UNIT LETTER E, 2271 FEET FROM THE North LINE AND 661 FEET FROM THE West LINE, SECTION 3 TOWNSHIP 15-S RANGE 33-E NMPM.

10. Field and Pool, or Wildcat
Saunders Permo Penn

15. Elevation (Show whether DF, RT, GR, etc.)

12. County
Lea

16. Check Appropriate Box To Indicate Nature of Notice, Report or Other Data

NOTICE OF INTENTION TO:				SUBSEQUENT REPORT OF:			
PERFORM REMEDIAL WORK	[ ]	PLUG AND ABANDON	[ ]	REMEDIAL WORK	[ ]	ALTERING CASING	[ ]
TEMPORARILY ABANDON	[ ]			COMMENCE DRILLING OPNS.	[ ]	PLUG AND ABANDONMENT	[X]
PULL OR ALTER CASING	[ ]	CHANGE PLANS	[ ]	CASING TEST AND CEMENT JOB	[ ]		
OTHER	[ ]			OTHER	[ ]		

17. Describe Proposed or Completed Operations (Clearly state all pertinent details, and give pertinent dates, including estimated date of starting any propose work) SEE RULE 1103.

1. Recover 4426' 5 1/2" casing.
2. Set CIBP at 9706' w/3 sx cement plug on top.
3. Set 25 sx cement plug at 4423'.
4. Set 25 sx cement plug at 4290'.
5. Set 10 sx cement plug at surface.
6. Install 4" dry hole marker extending 4' above ground level. Clean location.

18. I hereby certify that the information above is true and complete to the best of my knowledge and belief.

SIGNED [signature] TITLE Assistant District Superintendent DATE 12-3-71

APPROVED BY Nathan E. Clegg TITLE [illegible] INSPECTOR DATE MAR [illegible] 197[illegible]

CONDITIONS OF APPROVAL, IF ANY:

Towner Fed 1-15

INJECTION WELL DATA SHEET

SIDE 1

OPERATOR	LEASE			
TOWNER PETROLEUM CO.	Federal "15"			
WELL NO.	FOOTAGE LOCATION	SECTION	TOWNSHIP	RANGE
No. 1	1980' FNL and 1980' FEL of Sec. 15, T-15-S, R-33-E			Lea County, New Mexico

Schematic

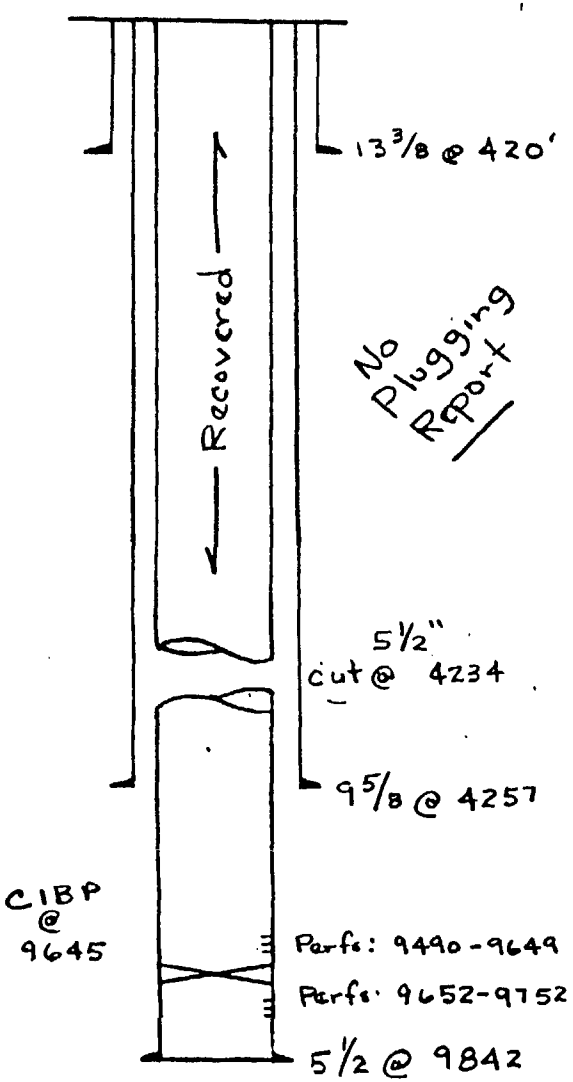

Tabular Data

Surface Casing

Size 13 3/8 " Cemented with 425 sx.

TOC Circ feet determined by visual

Hole size 17 1/4

Intermediate Casing

Size 9 5/8 " Cemented with 1365 sx.

TOC Circ feet determined by visual

Hole size 12 1/4

Long string

Size 5 1/2 " Cemented with 600 sx.

TOC 7700 feet determined by Temp. Survey

Hole size 8 1/2

Total depth 9842

Injection interval

_____ feet to _____ feet

(perforated or open-hole, indicate which)

COUNTY LEA FIELD Saunders

OPR TOWNER PETROLEUM CO. API 30-025-28112

NO 1 LEASE Federal "15" MAP

Sec 15, T15S, R33E COORD

1980 FNL, 1980 FEL of Sec 7-2-15 NM

26 mi SE/Caprock SPD 1-15-83 CMP 4-17-83

CSG

13 3/8-420-425 sx
9 5/8-4257-1365 sx
5 1/2-9842-450 sx

WELL CLASS: INIT D FIN D LSE. CODE

FORMATION	DATUM	FORMATION	DATUM

TD 10,500 (PSLV) PBD

DRY & ABANDONED

CONTR Sierra #3 OPRS ELEV 4180 GL sub-s 17

F.R. 12-27-82
PD 10,500 RT (Permo-Pennsylvanian)

2-10-83	Drlg "Tight"
2-15-83	Drlg 8425
2-17-83	Drlg 9375
2-21-83	Drlg 10,500
	2 DST's "Tight"
3-1-83	TD 10,500; PBD 9842; WOCT
3-24-83	TD 10,500; PBD 9842; Swbg
	Perf (Wolfcamp) 9652-9752 w/50 shots
	Acid (9652-9752) 3000 gals
	Swbd 8 BF w/SO (9652-9752)
4-11-83	TD 10,500; PBD 9842; SIBHP
4-20-83	TD 10,500; D&A
7-4-83	TD 10,500; Dry & Abandoned
	Rig Released 2-28-83
7-9-83	COMPLETION ISSUED 7-2-15 NM
	IC 30-025-71000-82

UNITED STATES
DEPARTMENT OF THE INTERIOR
GEOLOGICAL SURVEY

SUBMIT IN DUPLICATE (See other instructions on reverse side)

RECEIVED

Budget Bureau No. 42-R355.5.

WELL COMPLETION OR RECOMPLETION REPORT AND LOG*

5. LEASE DESIGNATION AND SERIAL NO.: NM-19857

6. IF INDIAN, ALLOTTEE OR TRIBE NAME:

7. UNIT AGREEMENT NAME:

8. FARM OR LEASE NAME: Federal 15

9. WELL NO.: 1

10. FIELD AND POOL, OR WILDCAT:

11. SEC., T., R., M., OR BLOCK AND SURVEY OR AREA: Sec. 15-T15S-R33E

12. COUNTY OR PARISH: Lea

13. STATE: New Mexico

TYPE OF WELL: OIL WELL ☐ GAS WELL ☐ DRY ☒ Other

TYPE OF COMPLETION: NEW WELL ☒ WORK OVER ☐ DEEP-EN ☐ PLUG BACK ☐ DIFF. RESVR. ☐ Other

NAME OF OPERATOR: Tenner Petroleum Company

ADDRESS OF OPERATOR: 6721 Greenspoint Park Drive, Suite 300, Houston, TX 77060

LOCATION OF WELL (Report location clearly and in accordance with any State requirements)*: 1980' FNL and 1980' FEL

At top prod. interval reported below: Same

At total depth: Same

14. PERMIT NO.: H3119 DATE ISSUED:

DATE SPUDDED	16. DATE T.D. REACHED	17. DATE COMPL. (Ready to prod.)	18. ELEVATIONS (DF, RKB, RT, GR, ETC.)*	19. ELEV. CASINGHEAD
-15-83	2-25-83	4-8-83	4180GL 4192 KB	4180

TOTAL DEPTH, MD & TVD	21. PLUG, BACK T.D., MD & TVD	22. IF MULTIPLE COMPL., HOW MANY*	23. INTERVALS DRILLED BY	ROTARY TOOLS	CABLE TOOLS
9,5[illegible]	9645'	---	→		X

PRODUCING INTERVAL(S), OF THIS COMPLETION—TOP, BOTTOM, NAME (MD AND TVD)*: 9490 to 9752' Wolfcamp TVD Requested Status > 2/86

25. WAS DIRECTIONAL SURVEY MADE: No

TYPE ELECTRIC AND OTHER LOGS RUN: DIL DNL GR

27. WAS WELL CORED: No

CASING RECORD (Report all strings set in well)

CASING SIZE	WEIGHT, LB./FT.	DEPTH SET (MD)	HOLE SIZE	CEMENTING RECORD	AMOUNT PULLED
8 5/8"	28	420	17½	425 sx. Circ. to surface	-0-
7 5/8"	36 & 40	4257	12¼	1365 sx. Circ. to surface	-0-
5 1/2	17	9842	8¾	600 sx. Top @ 7700	4234

LINER RECORD

SIZE	TOP (MD)	BOTTOM (MD)	SACKS CEMENT*	SCREEN (MD)

30. TUBING RECORD

SIZE	DEPTH SET (MD)	PACKER SET (MD)

PERFORATION RECORD (Interval, size and number)

9632-9752 w/4 SPF set CIBP 9645'
9490-9649' w/4 SPF

32. ACID, SHOT, FRACTURE, CEMENT SQUEEZE, ETC.

DEPTH INTERVAL (MD)	AMOUNT AND KIND OF MATERIAL USED
9632-9752	10,000 gal 15% HCL
9490-9649	7,000 gal 15% HCL

PRODUCTION

FIRST PRODUCTION: | PRODUCTION METHOD (Flowing, gas lift, pumping—size and type of pump): | WELL STATUS (Producing or shut-in):

DATE OF TEST	HOURS TESTED	CHOKE SIZE	PROD'N. FOR TEST PERIOD	OIL—BBL.	GAS—MCF.	WATER—BBL.	GAS-OIL RATIO
			→				

TUBING PRESS.	CASING PRESSURE	CALCULATED 24-HOUR RATE	OIL—BBL.	GAS—MCF.	WATER—BBL.	OIL GRAVITY-API (CORR.)
		→				

DISPOSITION OF GAS (Sold, used for fuel, vented, etc.): TEST WITNESSED BY

LIST OF ATTACHMENTS

ACCEPTED FOR RECORD

I hereby certify that the foregoing and attached information is complete and correct as determined from all available records.

SIGNED: C. W. Weaver TITLE: Regional Manager DATE: 4/20/83

AUG 1 1 1983

ROSWELL, NEW MEXICO

*(See Instructions and Spaces for Additional Data on Reverse Side)

Submit this report marked "Final" - Tenner Pet Corp. 4-3-86

INJECTION WELL DATA SHEET

Texaco State AQ #2

SIDE 1

OPERATOR	LEASE			
TEXACO	MCT-1 State AQ			
WELL NO.	FOOTAGE LOCATION	SECTION	TOWNSHIP	RANGE
2	2271' FNL and 661' FSL of Sec. 3, T-15-S, R-33-E		Lea, New Mexico	

Schematic

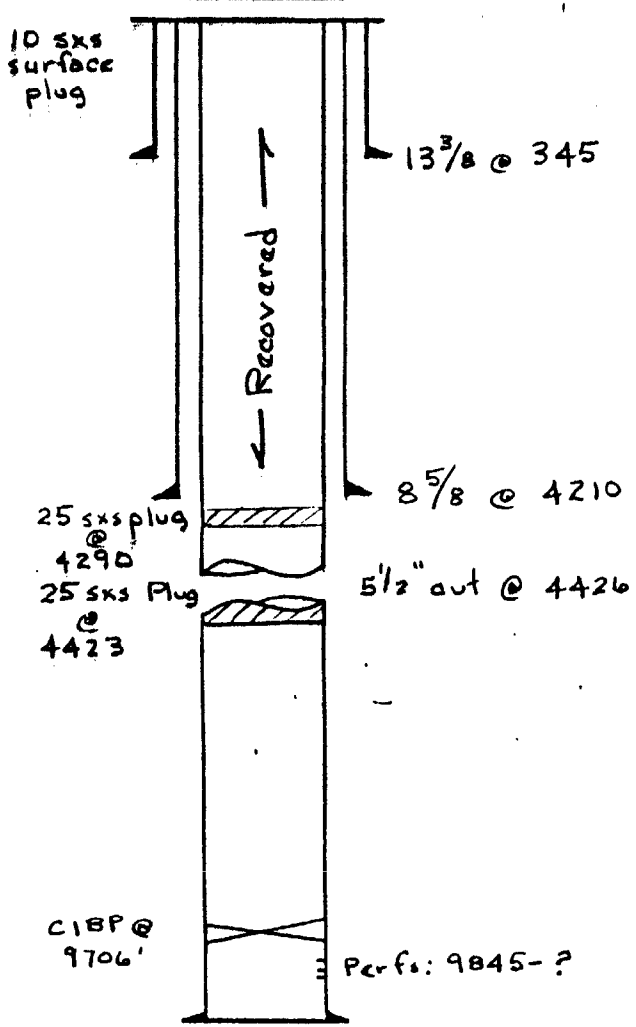

Tabular Data

Surface Casing

Size 13 3/8 " Cemented with 350 sx.

TOC surface feet determined by visual

Hole size 17 1/4

Intermediate Casing

Size 8 5/8 " Cemented with 500 sx.

TOC ~~?~~ 2932 feet determined by ~~?~~ calculations

Hole size 12 1/4

Long string

Size 5 1/2 " Cemented with ? 400 sx.

TOC ? 7553 feet determined by ? calculations

Hole size 7 7/8

total depth 9990

Injection interval

_____ feet to _____ feet

(perforated or open-hole, indicate which)

DISTRIBUTION		
SANTA FE		
FILE		
U.S.G.S.		
LAND OFFICE		
OPERATOR		

NEW MEXICO OIL CONSERVATION COMMISSION

APR 2 9 33 AM '67

Form C-103
Supersedes Old C-102 and C-103
Effective 1-1-65

5a. Indicate Type of Lease: State [X] Fee [ ]

5. State Oil & Gas Lease No. B-9380

SUNDRY NOTICES AND REPORTS ON WELLS

(DO NOT USE THIS FORM FOR PROPOSALS TO DRILL OR TO DEEPEN OR PLUG BACK TO A DIFFERENT RESERVOIR. USE "APPLICATION FOR PERMIT —" (FORM C-101) FOR SUCH PROPOSALS.)

1. OIL WELL [ ] GAS WELL [ ] OTHER- Injection Well

7. Unit Agreement Name: State S "N" Unit

2. Name of Operator: Amerada Petroleum Corporation

8. Farm or Lease Name:

3. Address of Operator: P.O. Box 668 - Hobbs, New Mexico

9. Well No. 14

4. Location of Well: UNIT LETTER E, 2271 FEET FROM THE North LINE AND 660 FEET FROM THE West LINE, SECTION 3 TOWNSHIP 15S RANGE 33E NMPM.

10. Field and Pool, or Wildcat: Saunders

15. Elevation (Show whether DF, RT, GR, etc.): 4208' DF

12. County: Lea

16. Check Appropriate Box To Indicate Nature of Notice, Report or Other Data

NOTICE OF INTENTION TO:				SUBSEQUENT REPORT OF:			
PERFORM REMEDIAL WORK	[ ]	PLUG AND ABANDON	[ ]	REMEDIAL WORK	[ ]	ALTERING CASING	[ ]
TEMPORARILY ABANDON	[ ]			COMMENCE DRILLING OPNS.	[ ]	PLUG AND ABANDONMENT	[ ]
PULL OR ALTER CASING	[ ]	CHANGE PLANS	[ ]	CASING TEST AND CEMENT JOB	[ ]		
				OTHER Convert to Injection Well			[X]
OTHER			[ ]				

17. Describe Proposed or Completed Operations (Clearly state all pertinent details, and give pertinent dates, including estimated date of starting any proposed work) SEE RULE 1103.

Pulled and laid down tubing & hyd. pumping equipment. Drilled 4-5/8" hole from 9900' to 9937'. Acidized OH 9900' to 9937' with 1000 gals. 15% FE acid. Ran 324 jts. 2-7/8" OD internally coated tubing set at 9664' with Baker Lok-Set packer at 9664' with 11,000# tension. Started injecting water 4-20-67.
Classification changed from Penn. zone oil well to Penn. zone water injection well 4-20-67.

18. I hereby certify that the information above is true and complete to the best of my knowledge and belief.

SIGNED B. L. Lim TITLE District Superintendent DATE 4-21-67

APPROVED BY _____ TITLE _____ DATE _____

CONDITIONS OF APPROVAL, IF ANY:

Testing Method (pilot, back pr.)	Tubing Pressure (Shut-in)	Casing Pressure (Shut-in)	Choke Size

MALCO REFINERIES, Inc. **WEEKLY REPORT** Field Saunders

SCOUT REPORT

Scout Dist. No. 5

COMPANY Texas Co. WELL NO. 2 FARM W.T.-J State AC

County Lea State N.M.

Spd. 8-29-51 Comp. 11-16-51

Contractor Texas Method

El. D. F. 4202 Gr.

FORMATIONS: Penetrated

TA

TX

BX

TTL

TSR

TQ

TGr

Dr 4210

Gl 3700

TCP

Tubbs 7500

Abo 7100

T. Bonne

T. Penn.

T. Miss.

T. Dev.

T. Mont.

T. Simp.

T. McKee

T. Ell.

T. Pre-Cam.

Inc. 9120

S/

S/

S/

S/

S/

S/

Grav. 41 GOR 1600

FCP 270 SICP

FTP 300-100 SITP

Sec. 3 Twp. 25 S Rge. 33 E

Loc. 2273' FN FL FE 661' FW

3900' Test

Location.

[illegible] RUP

9/6 @ 2910 RB.

9-19 @ 4700 [illegible]

9-26 @ 5100 [illegible]

[illegible]

10/10 @ 8065 [illegible]

10/10 @ 8009 [illegible]

10-24 @ 8810 [illegible]

[illegible]

11-2 [illegible]

11-22

The Subsurface Library
P. O. Box 942
Midland, Texas

CASING & CEMENT

Size	Depth	Sax
13 3/4	345	350
7 5/8	9440	50
5 1/2	9900	400

COMPLETION RECORD

T. D. 9990 PB

T. P. 9945

IP/F 24 BOPD 23/64

Tubing 2 Ch. @ 9543

Packer

Perf.

SHOOTING RECORD

Qts. From

Qts. From

Qts. From

Results

ACIDIZING RECORD

Gal. 600 Zone

Gal. Zone

Gal. Zone

Results

NO W-230 TB

Imperial American
Saunders St 4 1

INJECTION WELL DATA SHEET

SIDE 1

Imperial-American Management Co./ SOLAR OIL COMPANY		Sanuders State No. 1		
OPERATOR		LEASE		
No. 1	660' FSL and 660' FEL of Sec. 9, T-15-S, R-33-E		Lea County, New Mexico	
WELL NO.	FOOTAGE LOCATION	SECTION	TOWNSHIP	RANGE

Schematic

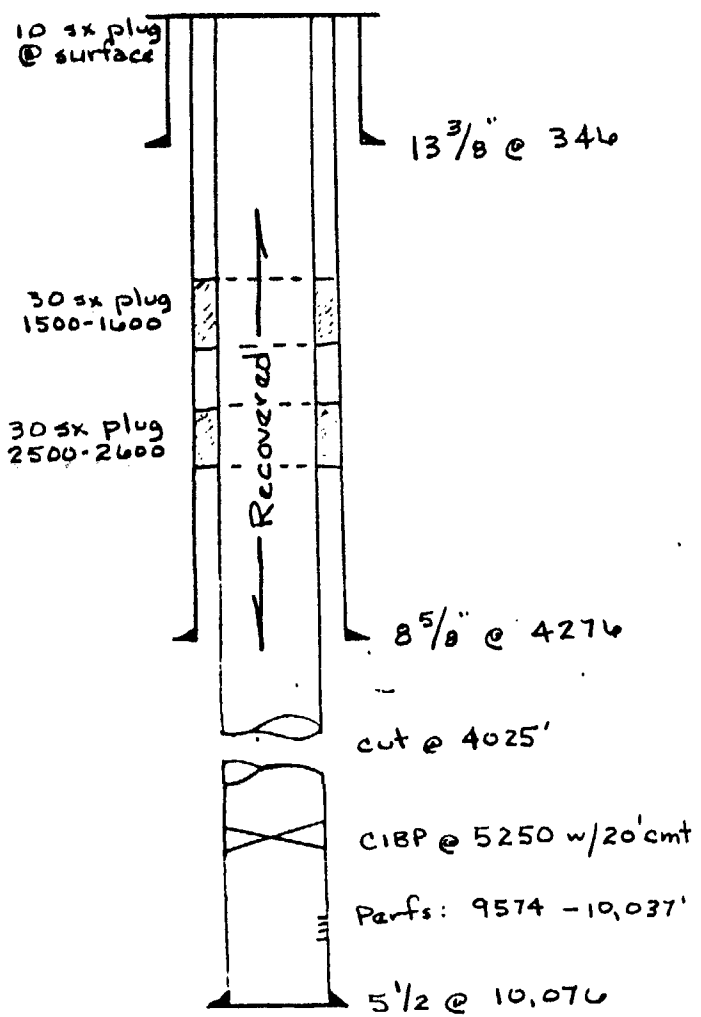

Tabular Data

Surface Casing

Size 13 3/8 " Cemented with 346 sx.

TOC surface feet determined by visual

Hole size 17 1/4"

Intermediate Casing

Size 8 5/8 " Cemented with 2335 sx.

TOC circulated feet determined by calculations

Hole size 11"

Long string

Size 5 1/2 " Cemented with 200 sx.

TOC 8553 feet determined by calculations

Hole size 7 7/8

Total depth 10,076

Injection interval

_____ feet to _____ feet
(perforated or open-hole, indicate which)

COUNTY LEA, N. MEX. FIELD EAST SAUND (PENN)

OPR SOLAR OIL COMPANY

E SAUNDERS STATE WELL NO. 1

OC Sec 9, T-15-S, R-33-E (P)

660 FSL & FEL of Sec or 4620 FNL & 660 FEL of Sec

FRC-OWWO-Orig. Cities Serv. #1 State "AG"

UNIQUE NO. 30-025-01232

MAPS CO-ORD

F. R. 6-26-69 OBJ Re SPUD 2-7-69

CTR LAHEE CLASS ELEV D. F. 4200' L/S

LOGS SPLS GL

TD 10,078' PBD ABD LOC. P & A 5-16-69

PAY ZONE	PROD INTERVAL	IP	BO	W	HRS	CHK	TEST BASIS
	PLUGGED AND ABANDONED						

GOR	GTY	CP	TP	BHP	POT DATE	TREATMENT

CSG 13 3/8" @ 346 w/325 Pulled from 5181, Reran 5 1/2 to
8 5/8" @ 4276 w/2335 5181 tie to drlg csg. w/200 sx.
5 1/2" @ 10076 w/200

COUNTY LEA, N. MEX. FIELD EAST SAUNDERS (PENN)

WELL: SOLAR #1 SAUNDERS STATE ELEV 4200' DF L/S

DATE	WELL RECORD	REACHED T. D.	SPL (LOG) MARKERS
	OTD 10,078'	P&A 5-16-69	Anhy (1533)
	NEW WORK		Yates (2680)
	Perf. 15/9574-9698 (OA)		SA (4245)
	Perf. 14/9962-10037 (OA)		Fullerton (7072)
	Ac/4500 (2 stages)		Abo (7810)
	Leak in csg. 5520-5549. Sqz 5520-49 w/		Hueco (9223)
	150 sx. cleaned out cmt & drld outside		Saunders lm (9852)
	of csg. @ 5544, could not get back in-		
	side csg.		
	(6-26-69		

The Subsurface Library
P. O. Box 942
Midland, Texas

Yates-Saunders State ac
P&A

DISTRIBUTION		
SANTA FE		
FILE		
U.S.G.S.		
LAND OFFICE		
OPERATOR		

NEW MEXICO OIL CONSERVATION COMMISSION

C-102 and C-103
Effective 1-1-65

5a. Indicate Type of Lease: State [X] Fee [ ]

5. State Oil & Gas Lease No.: K-5711

SUNDRY NOTICES AND REPORTS ON WELLS

(DO NOT USE THIS FORM FOR PROPOSALS TO DRILL OR TO DEEPEN OR PLUG BACK TO A DIFFERENT RESERVOIR. USE "APPLICATION FOR PERMIT -" (FORM C-101) FOR SUCH PROPOSALS.)

1. OIL WELL [X] GAS WELL [ ] OTHER-

7. Unit Agreement Name:

2. Name of Operator: Imperial-American Management Co.

8. Farm or Lease Name: Saunders State

3. Address of Operator: 507 Midland Savings Bldg., Midland, Texas 79701

9. Well No.: 1

4. Location of Well: UNIT LETTER P, 660 FEET FROM THE South LINE AND 660 FEET FROM THE East LINE, SECTION 9 TOWNSHIP 15-S RANGE 33-E NMPM.

10. Field and Pool, or Wildcat: Saunders Permo Penn

15. Elevation (Show whether DF, RT, GR, etc.): 4188' GR

12. County: Lea

16. Check Appropriate Box To Indicate Nature of Notice, Report or Other Data

NOTICE OF INTENTION TO:

- PERFORM REMEDIAL WORK [ ]
- TEMPORARILY ABANDON [ ]
- PULL OR ALTER CASING [ ]
- PLUG AND ABANDON [ ]
- CHANGE PLANS [ ]
- OTHER [ ]

SUBSEQUENT REPORT OF:

- REMEDIAL WORK [ ]
- COMMENCE DRILLING OPNS. [ ]
- CASING TEST AND CEMENT JOB [ ]
- ALTERING CASING [ ]
- PLUG AND ABANDONMENT [XX]
- OTHER [ ]

17. Describe Proposed or Completed Operations (Clearly state all pertinent details, and give pertinent dates, including estimated date of starting any proposed work) SEE RULE 1103.

Plugged and Abandoned well as follows:

8-7-71 Set Cast Iron Bridge Plug @5250' w/20' cement plug on top.

8-13-71 Rigged up. Loaded hole with 9.5# mud.

8-14-71 Shot off 5½" casing @ 4025'. Pulled & laid down casing.

Set 30 sx cement plug 2500'-2600' (base of salt)
Set 30 sx cement plug 1500-1600' (top of salt)
Set 10 sx cement plug 0-30'

Set Marker & cleaned up location - Ready for inspection 10-1-71.

18. I hereby certify that the information above is true and complete to the best of my knowledge and belief.

SIGNED [signature] TITLE Agent DATE 9-13-71

APPROVED BY [signature] TITLE GAS INSPECTOR DATE

CONDITIONS OF APPROVAL, IF ANY:

Case 8926

MALCO REFINERIES, Inc. [redacted]
SCOUT REPORT

Field Saunders
Scout Dist. No. C

COMPANY Amerada Pet. Co. WELL NO. 3 FARM State S #29

County Lea State N.M.
Spud [illegible] Comp. 6-7-51
Contractor Method
El. D. F. 4202 Gr.

FORMATIONS: Penetrated

TA
TX
BX
TYL
TSR
TQ
TGb
TSA [illegible] + 7
TGI
TCF
T Tubbs
T Abo 7770 -3578
T Hueco
T. Penn.
T. Miss.
T. Dev.
T. Mont.
T. Simp.
T. McKee
T. Ell.
T. Pre-Cam.
[illegible] 9120 -4918

S/
S/
S/
S/
S/
S/

Grav. 41 GOR 1598-1
FCP Pkr. 6616 SICP
FTP 1000 SITP

Sec. 3 Twp. 15 South Rge. 33 East
Loc. 1980 FN 660 FE FS FW
9750' East
DTP
[illegible] 3505 Abo
[illegible] 3579 San Andres
[illegible] 7432 [illegible]
[illegible] 8 [illegible]
5-16 8715 [illegible]
5-23 8[illegible]-9160 SL
5-29 8[illegible]
6-4 8[illegible]
6-13 TD 9905 Bond 9914 CAO
Sch. T.D. Pkr 120 below 9865-96'
CAO 2' 9901 washed Perfs w/ 500

The [illegible] Library
P. O. Box 942
Midland, Texas

CASING & CEMENT

Size	Depth	Sax
[illegible]	[illegible]	[illegible]
[illegible]	[illegible]	[illegible]
5½	9905	600

COMPLETION RECORD

T. D. 9905 PB 9904
T. P. 9773
IP 732 BOPD
Tubing 2 Ch. 2"/6 @ 9901
Packer
Perf.

SHOOTING RECORD

Qts. From
Qts. From
Qts. From
Results

ACIDIZING RECORD

Gal. 500 Zone
Gal. Zone
Gal. Zone
Results

MALCO REFINERIES, Inc.
SCOUT REPORT

NE SW WEEKLY REPORT

Field Saunders

Scout Dist. No. 5

COMPANY Amerada Pet. Corp. WELL NO. 2 FARM State S "D"

County Lea State N. M.

Spd. 12-31-50 Comp. 5-24-51

Contract ~~Pulling or Drlg~~ Method

El. D. F. [illegible] Gr.

FORMATIONS: Penetrated

TA
TX
BX
TYL
TSR
TQ
TGb
TSA
TG1
TCF
T Tubbs
T Abo 7770 - 3563
T Hueco
T. Penn.
T. Miss.
T. Dev.
T. Mont.
T. Simp.
T. McKee
T. Ell.
T. Pre-Cam.
[illegible] - 4813

S/
S/
S/
S/
S/
S/

Grav. 40.1 GOR 1753
FCP 1/8 1973 SICP
FTP 1150 SITP

Sec. 3 Twp. 15 South Rge. 33 East
Loc. 660' FS FE FS 1980' FW

Drilling 909 BB
9780' Test
[illegible]

The Subsurface Library
P. O. Box 942
Midland, Texas

CASING & CEMENT			COMPLETION RECORD
Size	Depth	Sax	T. D. 9915 PB 9913
11 3/4	297	253	T. P. 9792
[illegible]	[illegible]	[illegible]	IP/F 22.29 BO 2 hrs
[illegible]	[illegible]	[illegible]	Tubing 2 Ch. [illegible] @ 9911
			Packer
			Perf.

SHOOTING RECORD	ACIDIZING RECORD
Qts. From	Gal. 500 Zone
Qts. From	Gal. Zone
Qts. From	Gal. Zone
Results	Results

MALCO REFINERIES, Inc.
SCOUT REPORT

NE¼SW¼

Field Saunders

Scout Dist. No. 5

COMPANY Amerada Petroleum Corporation WELL NO. 4 FARM State S "B"

County Lea State New Mexico

Spud [illegible] Comp.

Contractor Method

El. D. F. 4203 Gr. T/Sd

FORMATIONS: Penetrated 6

TA	[illegible]	1530
TX	[illegible]	1635
BX	[illegible]	2515
TYL	[illegible]	2680
TSR		
TQ		
TGb		
TSA	[illegible]	4215
TG1		
TCF		
T Tubbs		
T Abo	7770 (-3567)	7770
T Huerco		
T. Penn.		
T. Miss.		
T. Dev.		
T. Mont.		
T. Simp.		
T. McKee		
T. Ell.		
T. Pre-Cam.		
W.C.	9120 (-4917)	9120

S/
S/
S/
S/
S/
S/

Grav. GOR
FCP SICP
FTP SITP

Sec. 3 Twp. 15 South Rge. 33 East

Loc. FN FE 1980' FS 1980' FW

10,000' Test
Location

[illegible]
5-10 @ [illegible]
5-28 @ [illegible]
5-29 @ 7048L
6-4 @ [illegible]
6-12 @ 9402L
6/20 TD 9915L DW DST.
6/27 TD 9915L
DST 9885-9909 [illegible]
1900' WB 9/56# [illegible]
[illegible] 132 BO in 4 hr
GOR 1625 Gr. 41.4
Rec. 1980' Oil + 630 HOCM.
IHFP 1600 ISIP 3100
5½ - 9915 - 500
Perf. 92/9890-9913
Pkr. 2" Tbg @ 9909 w/pkr
@ 8688
A/500 - 9890-9913

The Subsurface Library
P. O. Box 942
Midland, Texas

CASING & CEMENT

Size	Depth	Sax
[illegible]	[illegible]	[illegible]
[illegible]	[illegible]	[illegible]
5½	9915	500

(13# = 417 Bo)

SHOOTING RECORD

Qts. From
Qts. From
Qts. From
Results

COMPLETION RECORD

T. D. 9915L PB 9913
T. P. 9776
IP F 746 BOPD
Tubing 2" Ch. 3/4 @ 9909
Packer 8688 RP. 425
Pkr. 1539 Gr. 43.9

ACIDIZING RECORD

Gal. 8/22/51 Zone
Gal. TA: 500
Gal. Zone
Results

Lea 3-15-33

Amerada 7 State SB

LOG

P/B D. 10,010 L D0. 10,005 TD 9957

Tbl. 368 Bo + 31 B BS & X water

thru ½" ch on 2" @ 9995

Gor 1338 Gr. 39.5

Cp. phr @ 9678

18 Jy 57

Pr. 500

The Shoshuree Library
P. O. Box 942
Midland, Texas

MALCO REFINERIES, Inc.
SCOUT REPORT

WEEKLY REPORT

Field: Sanders

Scout Dist. No. 5

COMPANY: Amerada WELL NO. 6 FARM: State SB

County: Lea State: NM

Spud: 7-12-51 Comp: 8-15-51

Contractor: Method:

El. D. F. 4202 Gr.

Sec. 3 Twp. 15S Rge. 33E

Loc. FN 1980 FE 1980 FS FW

10,000' Tests Lea

FORMATIONS: Penetrated

TA

TX

BX

TYL

TSR

TQ

TQb

TSA

TG1

TCF

T. Tubbs

T. Abo 7773

T. Wolf 9118

T. Penn. 9346

T. Miss.

T. Dev.

T. Mont.

T. Simp.

T. McKee

T. Ell.

T. Pre-Cam.

S/

S/

S/

S/

S/

S/

Grav. 43 GOR 1489

FCP SICP

FTP SITP

CASING & CEMENT

Size	Depth	Sax
13 3/8	297	[illegible]
8 5/8	[illegible]	1500
5½	9346	600

COMPLETION RECORD

T. D. 9355 PB

T. P. 9338

IP/F [illegible]

Tubing 2 Ch/2 9731

Packer 9623

Perf.

SHOOTING RECORD

Qts. From

Qts. From

Qts. From

Results

ACIDIZING RECORD

Gal. Zone

Gal. Zone

Gal. Zone

Results

The Subsurface Library
P. O. Box 942
Midland, Texas

MALCO REFINERIES, Inc.
SCOUT REPORT

Field: Saunders

Scout Dist. No. 5

COMPANY: Amerada Pet. Corp. WELL NO. 7 FARM: State 55

County: Lea State: N.M.

Spud: 8/10/51 Comp.

Contractor: Method:

El. D. F. 4206 Gr.

FORMATIONS: Penetrated

TA		
TX		
BX		
TYL		
TSR		
TQ		
TGb		
TSA	1160	+46
TG1		
TCF		
T. Tubbs		
T. Abo	7200	-3544
T. Wolfcamp	9122	-4914
T. Penn.	10634	-5189
T. Miss.		
T. Dev.		
T. Mont.		
T. Simp.		
T. McKee		
T. Ell.		
T. Pre-Cam.		

S/
S/
S/
S/
S/
S/

Grav. GOR
FCP SICP
FTP SITP

Sec. 3 Twp. 15 S Rge. 33 E

Loc. 560' FN FE FS 560' FW

10,000' Test

Location

8/5 Ø 2913 A.x

2-3 - TD 12,000' Drop to cure Cag.

[illegible]

9/2 Ø 7175L

9-19 Ø 43174

9-26 TD 9930' Drop to lit

10-3 TD 10,010 Lnoc

[illegible] 80 cp d 48 G 3000

N 26 m [illegible] Cl 35 Cl 6E 5 BO

Gr. 47.7 rec 1650 Oil [illegible]

[illegible] 3000

[illegible] 5 cp d 32 G [illegible]

[illegible] 1930 Cl 322 [illegible]

[illegible] 850 1500 TBL 2950

[illegible] cp d 32 G [illegible]

[illegible] 92 BC [illegible]

[illegible] 40.9 rec 1470' Oil

[illegible] 175 [illegible]

[illegible] 9910 [illegible]

[illegible]

10/10 TD 10,010L DO 10,005 3I

Ang 68/9957-74

2 @ 9975 w/plug 9679

A/500 - 9957-74

fl. 163 BF 4/10% BS & water

in 7½ min ½" ch.

fl. 445 BO in 24½ min ½" ch.

CASING & CEMENT

Size	Depth	Sax
13¾	296	250
[illegible]	4000	[illegible]
[illegible]	[illegible]	[illegible]

COMPLETION RECORD

T. D. PB
T. P.
IPPF
Tubing Ch. @
Packer
Perf.

SHOOTING RECORD

Qts. From
Qts. From
Qts. From
Results

ACIDIZING RECORD

Gal. Zone
Gal. Zone
Gal. Zone
Results

The Subsurface Library
P. O. Box 942
Midland, Texas

MALCO REFINERIES, Inc. SE NE
SCOUT REPORT **WEEKLY REPORT**

Field Saunders 1

Scout Dist. No. 5

COMPANY Amerada Pet. Corp. WELL NO. 5 FARM State S ope

County Lea State N.M.

Spud 6-12-51 Comp. 5-4-51

Contractor Method

El. D. F. [illegible] Gr.

FORMATIONS: Penetrated

TA	[illegible]	[illegible]
TX	[illegible]	[illegible]
BX	[illegible]	+1400
TYL	[illegible]	+1514
TSR		
TQ		
TGb		
TSA	[illegible]	[illegible]
TGI		
TCF		
T Tubbs		
T Abo	7780	-2581
T Hueco		
T. Penn.	9410 XX	-5211
T. Miss.		
T. Dev.		
T. Mont.		
T. Simp.		
T. McKee		
T. Ell.		
T. Fre-Cam.		
LM.C.	9110	-4941

S'
S'
S'
S'
S'
S'

Grav. 43.9 GOR 1-6-1
FCP 450 SICP
FTP 250 SITP

Sec. 1 Twp. 15S Rge. 33 E

Loc. 2120 FN 660 FE FS FW

RTB for 9760' Tests.

6/20 @3878 X.A.
6/27 TD 4255 A.X. WOE
7-3 @ [illegible]
7-11 @ 7,746
7-18 @ 8,543
7-25 @ 8,946
8-1 TD 9,911 cup tbg.
DST 9772-9811 op 4:25
G 3 min closed 30 min open
Test M 3 min-F 30 Rec 41 mm
Gas 42.3 -00 241.0
Sec 1015 FP 1320 -2120
1 Bbl 2720
DST 9815-9861 op 4:00 G 3 min
M 3 min-G 1 min F 1 30 Rec 22 Ft Mud
Gas 42.3 00 241.0 Gas 19.3
FP 2472-3319 15 min 3328
DST 9865-9910 op 4:00 G 3 min
M 5 min-G 1 min-F 1 25 Rec 1120 Ft Mud
Gas 1120.1 00 42.3
Initial Shut 9916 120 min Gas
Gas 2 [illegible]

The Subsurface Library
P. O. Box 842
Midland, Texas

CASING & CEMENT

Size	Depth	Sax
13 3/8	305	250
8 5/8	4285	1500
5 1/2	9910	[illegible]

COMPLETION RECORD

T. D. 9911 PB Sand 9916
T. P. [illegible]
IP [illegible] 8,234 bbls
Tubing 2 Ch. 1/2 @9900
Packer
Perf.

SHOOTING RECORD

Qts. From
Qts. From
Qts. From
Results

ACIDIZING RECORD

Gal. Zone
Gal. Zone
Gal. Zone
Results

Lea 3-15-33

Amerada 5 State 5 'D'

LOG

DST (13,615-656) 3600' WB TO 4' rec WB &
8671' XW w 5 odor FP 4901-5050 SIP 6350/30
MAY 22 Ø 14,088 dolo
MAY 29 Ø 14,646 ls & ch
JUN 5 TD 14,809 grav WOC
DST (14,630-809) 5640 WB TO 1' 20 rec
WB + 121' m FP 2700, SIP 2780/30
JUN 12 TD 14,809 grav DO 11,765 ST
92/11,232-255
36/11,702-716
A/500 swb/dry
40/11,629-689
A/500 swb/
re-perf 11,629-609
re-A/500 swb/ 38 BLO + 6 BWO + 12 BAW/10
JUN 19 TD 14,809 grav PB 11,696 swbs
JUN 26 TD 14,809 grav PB 11,696 to perf
swb/ 3 BO + 1 BLW/ 6 hrs
11,680-690 SF/10,000
swb/ 10 BLO/4
JUL 3 TD 14,809 grav PB 11,696 ~~Pot~~ Temp Ab
320/11,600-680
A/500 swb/ 13 BLO + 41 BAW/9
Lock 278 BLO

The Su... ce Library.
P. O. Box 942
Midland, Texas

MALCO REFINERIES, Inc.
SCOUT REPORT

WEEKLY REPORT

Field: Saunders

Scout Dist. No.

COMPANY: Amerada WELL NO.: 8 FARM: SB

County: Lea State: N.Mex.

Spud: 9-15-51 Comp.: 11-19-51

Contractor: Method:

El. D. F.: 4209 Gr.:

FORMATIONS: Penetrated

TA
TX
BX
TYL
TSR
TQ
TGB
TSA 4195 - 14
TGI
TCF
T Tubbs
T Abo 7710 - [illegible]
T Hueco
T Penn [illegible] XX - [illegible]
T. Miss.
T. Dev.
T. Mont.
T. Simp.
T. McKee
T. Ell.
T. Pre-Cam.
[illegible] - [illegible]

S/
S/
S/
S/
S/
S/

Grav. [illegible] GOR [illegible]
FCP SICP
FTP SITP

Sec. 3 Twp. 15 S Rge. 33 E

Loc. FN FE 1980' FS 660' FW

10,000' Test
Location

9-19 [illegible] PB
9-26 [illegible] PX
[illegible]
10-10 [illegible]
10-16 [illegible]
10-24 [illegible]

The Subsurface Library
P. O. Box 942
Midland, Texas

CASING & CEMENT

Size	Depth	Sax
[illegible]	[illegible]	[illegible]
[illegible]	[illegible]	[illegible]

COMPLETION RECORD

T. D. 10,061' PB 9995
T. P. 9792
Hr. 24 [illegible]
Tubing 2 Ch. 1/2 @ 9792
Packer 9518
Perf.

SHOOTING RECORD

Qts. From
Qts. From
Qts. From
Results

ACIDIZING RECORD

Gal. 500 Zone
Gal. Zone
Gal. Zone
Results

MALCO REFINERIES, Inc. SECRET

SCOUT REPORT WEEKLY REPORT

Field Saunders

Scout Dist. No. 5

COMPANY The Texas Co. WELL NO. 1 FARM State AQ

County Lea State N.M. Sec. (3) Twp. 15 South Rge. 33 East

Spud 2-10-51 Comp. 4-11-51 Loc. 2270' FX FE FS 1980' FW

Contractor Method 9900' Test

RUR

El. D. F. 4204 Gr.

FORMATIONS: Penetrated

TA

TK

BK

TYL 4672 4132

TSR

TQ

TGb

TSA 4815

TG1

TCP

T Tubbs

T Abo 7707

T Hueco

T. Penn. 9

T. Miss.

T. Dev.

T. Mont.

T. Simp.

T. McKee

T. Ell.

T. Pre-Cam.

MD 9200

S

S

S

S

S

S

Grav. 40.5 GOR 1190

FCP 6 SICP

FTP SITP

CASING & CEMENT

Size	Depth	Sax
13 3/8	351	275
8 5/8	4038	200

COMPLETION RECORD

T. D. 9946 PB

T. P. 9770

IP 1148 BOPD

Tubing 2 Ch. 1" @ 4795

Packer

Perf.

SHOOTING RECORD

Qts. 500 From

Qts. From

Qts. From

Results

ACIDIZING RECORD

Gal. Zone

Gal. Zone

Gal. Zone

Results

The Subsurface Library
P. O. Box 942
Midland, Texas

MALCO REFINERIES, Inc.
SCOUT REPORT

WEEKLY REPORT

Field Undera

Scout Dist. No. 5

COMPANY Amerada Pet. Corp. WELL NO. 1 FARM State "SC"

County Lea State N. M.

Spud 1-11-51 Comp. 4-9-51

Contractor Method

El. D. F. [illegible] Gr.

FORMATIONS: Penetrated

TA 1563

TX

BX

TYL

TSR

TQ

TGb

TSA

TGI

TCF

T. Tubbs

T. Abo 7203

T. Huero

T. Penn.

T. Miss.

T. Dev.

T. Mont.

T. Simp.

T. McKee

T. Ell.

T. Pre-Cam.

S

S

S

S

S

S

Grav. [illegible] GOR 1373

FCP [illegible] SICP

FTP 975 SITP

Sec. 3 Twp. 15 South Rge. 33 East

Loc. 660' FN. 660' FE. FS. FW.

9760' Test

Location

1-10 @ 2140 A+X

1-17 @ [illegible] A+GL

1-21 @ 5013 L

1-31 @ 5200 L+X

2-7 @ 6564 L

2-14 @ 6950 L

2-21 @ 7514 L

2-28 @ 8021 L+GL

3-7 @ 8372 L+GL

3-14 @ 8980 L

3-21 @ 9470 L

3-27 9805 Lost prod TD

DST 9495-9593 op. 1:25 rec 62' MW

@ 9773-9779 rec 5' [illegible]

Vis Pac 3' [illegible]

[illegible]

DST 9241-9265 op. 4:02 Gas 3 min

10 min oil in 2 min 4 bbl. El

[illegible] PD [illegible] rec 210' oil

Gas vol. 594 MCFGPD

[illegible] @ [illegible] 9322

@ 9105-47 [illegible]

[illegible] Gas [illegible]

DST 9805-47 op 4:12 Gas 2 min

[illegible] MS 0.1 [illegible]

El 219 BO 4 bbl Gas [illegible]

Oil Nonator [illegible]

[illegible]

[illegible]

CASING & CEMENT

Size	Depth	Sax
13 3/8	296	225
8 5/8	2[illegible]	1000

COMPLETION RECORD

T. D. 9933 L PB 9910

T. P. 9850

IP/F 1134 24 hrs

Tub'ng 2" Ch. 3/4 [illegible]

Packer 9714

Perf.

SHOOTING RECORD

Qts. From

Qts. From

Qts. From

Results

ACIDIZING RECORD

Gal. 500 Zone

Gal. Zone

Gal. Zone

Results

The Subsurface Library
P. O. Box 942
Midland, Texas

Lea 3-15-33
Amerada / State SC

LOG

[illegible]

The Sub[illegible] Library
P. O. Box 942
Midland, Texas

MALCO REFINERIES, Inc.
SCOUT REPORT

Field Saunders

Scout Dist. No. 5

COMPANY Amerada Pet Corp WELL NO. 2 FARM State S [illegible]

County Lea State NM

Spud 6 27 71 Comp.

Contractor Method

EL. D. F. 4201 Gr.

FORMATIONS: Penetrated

YA	1650	+ [illegible]
YX	1635	+ [illegible]
BX	2602	+ [illegible]
YYL	2699	− [illegible]
TSR		
TQ		
TGb		
TSA	[illegible]	− [illegible]
TG1		
TCF		
T. Tubbs		
T. Abo	7780	− [illegible]
T. Wolf Camp	9110	− [illegible]
T. Penn. AA	9380	− [illegible]
T. Miss.		
T. Dev.		
T. Mont.		
T. Simp.		
T. McKee		
T. Ell.		
T. Pre-Cam.		

S/
S/
S/
S/
S/
S/

Grav. GOR
FCP SICP
FTP SITP

Sec. 3 Twp. 15S Rge. 33E
Loc. FN FE 660 FS 1980 FW

9760' Test. Location
7-8 [illegible] A
7-11 [illegible]
7-18 [illegible]
7-22 [illegible]
8-1 [illegible]
8-8 [illegible]
8/12 TD 9591 L Prep. [illegible]
[illegible] 9642-9525 op 4 [illegible]
Rec. 120' [illegible]
8-[illegible] TD 9915 L Bond 9912 Perf [illegible]
[illegible] 9894-9915 op 4120 [illegible] 4000
AI 16 min - OI 10 min - FI [illegible]
BO + 1.46 + 32.7 PXW in 4 hrs
[illegible] 43.4 GOR 1220 Rec. 700'
OI 7960' XW FP 1500 1-Blizzard
[illegible] SCI [illegible]
8-29 TD 9915 L [illegible] [illegible]
[illegible] Cable [illegible]-5908 FI 211
BO + 4 PXW 17 hrs [illegible] GOR
1645 GOR [illegible]
9/5 TD 9945 L DO 9914 TP 9780
IP [illegible] 299 30 in 24 [illegible]
[illegible] ~ 2" C 9909
CP. 200 TP. 150
GR. 41.4 GR. 16.25
8 9 25 57
not

CASING & CEMENT

Size	Depth	Sax
13 3/8	299	310
[illegible]	[illegible]	[illegible]
5 1/2	[illegible]	600

COMPLETION RECORD

T. D. PB
T. P.
IPPP
Tubing Ch. @
Packer
Perf.

SHOOTING RECORD

Qts. From
Qts. From
Qts. From
Results

ACIDIZING RECORD

Gal. Zone
Gal. Zone
Gal. Zone
Results

The Subsurface Library
P. O. Box [illegible]
Midland, Texas

MALCO REFINERIES, Inc.
SCOUT REPORT

WEEKLY REPORT

Field Wildcat

Scout Dist. No. 7

COMPANY Amerada Pet. Corp. WELL NO. 5 FARM State S "D"

County Lea State New Mexico Sec. (3) Twp. 15S Rge. 33E

Spud 2-9-51 Comp. 6-29-52 Loc. FN FE 810' FS 1980' FW

Contractor Pat McGee - Stafford Method 14,500' Test. Loc.

EL. D. F. 4173 Gr.

FORMATIONS: Penetrated

TA		1530
TX		1630
BX		2452
TYL		2680
TSR		
TQ		3472
TGb		
TSA		4210
TGI		6035
TCF		6382
T Tubbs		7045
T Abo		7773
T Hueco		9117
T. Penn.		~~12,380~~
T. Miss.	12,380	12,383
T. Dev	13,550	13,563
T. Mont.		14,245
T. Simp.	14,645	
T. McKee		
T. Ell.		
T. Pre-Cam.		
Atoka	11,610	
Jones Ranch	12,820	
Wolfcamp	12,465	13,460
S/ Silurian	14,000	14,002
S/ granite		14,777
S/		
S/		
S/		
S/		

Grav. GOR

FCP SICP

FTP SITP

FORM NO. 121 3M 10-55 SPCO.

FEB 13 Ø 2117 20 d A
FEB 20 Ø 4160 sn
FEB 27 Ø 5130 ls
MAR 6 Ø 7215 ls
MAR 13 Ø 8935 ls
MAR 20 Ø 9898 ls
MAR 27 Ø 10,867 ls
APR 3 Ø 11,514 ls
APR 10 TD 11,283 ls finishing
~~DST (11,584-283) TO 4', 2415' WB GTS 1'15" 245 MCFD to 1.3 MCF~~
~~TOC 2884 WB & 7315 FO est.~~
APR 17 Ø 12,287 ls sh
DST (11,584-283) TO 4', 2415' WB GTS 1'15", 245 MCF decr to 17.9 MCF, pipe valved WB & oil for 30 min, last test too if all of fluid was oil would have rec 7315 FO est.
DST (11,894-12,120) TO 1'54" 3906' WB rec WB & 402' m FP 1500-1560 SIP 3980/30
APR 24 TD 12,562 ls SPR
MAY 1 Ø 12,963 ls & ch
MAY 3 Ø 13,372 ls
MAY 15 TD 13,656 dol pulling DST
DST (13,555-621) 4285' WB TO 1'2" rec WB & 30' m FP 2160 SIP 2220/20

CASING & CEMENT

Size	Depth	Sax
13 3/8	297	250
9 5/8	4274	1750
5 1/2	11,290	650

COMPLETION RECORD

T. D. ~~Bottom~~ 14,809 sw	PB 11,696
T. P.	
IPPF	T. Abo
Tubing	Ca. @
Packer	
Perf.	

SHOOTING RECORD

Qts. From
Qts. From
Qts. From
Results

ACIDIZING RECORD

Gal. Zone
Gal. Zone
Gal. Zone
Results

The Subsurface Library
P. O. Box 942
Midland, Texas

COUNTY _____ FIELD SAUNDERS(PERM U/PENN)

OPR CHARLES B. GILLESPIE, JR.

LSE STATE "M" WELL NO. 7

Sec 3, T-15-S, R-33-E (O)

660 FSL & 1980 FEL of Sec

API NO. 30-025-28702 CO-ORD _____

F.R. 4-25-84 OBJ 10,100'RT ELEV KB _____

TR Ard SPUD 5-8-84 DF _____

TD 10,116 PBD 10,070 P & A _____ GL 4188'op

PAY ZONE	PROD INTERVAL	IP	BO	W	HRS	CHK	TEST BASIS
	9887-9911	P	118	143	24		

GOR	GTY	CP	TP	BHP	POT DATE	TREATMENT
2203	42.1				7-15-84	A/4000

CSG 13 3/8-437-300 5½-10,116-850

8 5/8-4205-1700

MIDLAND OIL SCOUTS ASSOCIATION WELL RECORD

COUNTY LEA, N.M. FIELD SAUNDERS (PERMO U/PENN)

CHARLES B. GILLESPIE, JR #7 STATE "M"

TD 10,116'; PB 10,070';

c 4880-4925, R/45', c 5031-45, R/14'

P: 9887-9894, 9896-9911, A/4000

S/27 BO, 60 BW/24', P/47 BO, 110 BW/24'

(9-12-84)

SPL (LOG) MARKERS

Anhy	(952)
Salt	(1651)
Yates	(2701)
Grbg	(3922)
SA	(4143)
Padd	(5030)
Tubb	(7065)
Abo	(7780)
Wlfc	(9130)
Penn	(9410)

THE SUBSURFACE LIBRARY
P. O. BOX 2538
MIDLAND, TX 79702

COUNTY LEA, N.M. FIELD SAUNDERS (PERMO-U/PENN)

OPR CHARLES B. GILLESPIE, JR.

LSE STATE "M" WELL NO. 8

LOC Sec 3, T-15-S, R-33-E (P)

660 FSL & FEL of Sec

API NO. 30-025-29285 CO-ORD

F.R. 6-5-85 OBJ 10,280'RT ELEV KB

CTR Wilbros SPUD 6-2-85 DF

TD 10,259 PBD 10,083 P & A GL 4186'op

PAY ZONE	PROD INTERVAL	IP	BO	W	HRS	CHK	TEST BASIS
	9978-96	F	154	11	24	24/64"	

COR	GTY	CP	TP	BHP	POT DATE	TREATMENT
2.08			160		7-15-85	A/2000

CSG 13 3/8-357-400 5½-10,126-910

8 5/8-4300-1600

MIDLAND OIL SCOUTS ASSOCIATION WELL RECORD

COUNTY LEA, N.M. FIELD SAUNDERS (PERMO-U/PENN)

WELL: CHARLES B. GILLESPIE, JR #8 STATE "M"

DATE

TD 10,259'; PB 10,083';
Pf/9978-96, A/2000, S/160 BO,
98 BW/24', P/154 BO, 417 MCF, 11 BW
24 hrs (9978-96)

(7-31-85)

SPL (LOG) MARKERS

Anhy	(1562)
Salt	(1660)
B/Salt	(2560)
Grbg	(3932)
SA	(4155)
Glor	(5780)
Padd	(6060)
Tubb	(7070)
Abo	(7796)
Wlfc	(9144)
Penn	(9445)

THE SUBSURFACE LIBRARY
P. O. BOX 2538
MIDLAND, TX 79702

COUNTY LEA , NEW MEXICO FIELD SAUNDERS PERMO (PENN)
OPR CHARLES B. GILLESPIE, JR.
LSE STATE "G" WELL NO. 8
LOC Sec 3, T-15-S, R-33-E (L)
1980 FSL & 660 FWL of Sec
FRC-OWWO-Orig. Amerada Petro. #8 State 5B
UNIQUE NO. 30-025-01215
MAPS CO-ORD
F. R. 6-19-74 OBJ Re SPUD 5-10-74
CTR LAHEE CLASS ELEV D. F. 4209'*
LOGS SPLS GL
TD 10,261' PBD ABD LOC. P & A

PAY ZONE	PROD INTERVAL	IP	BO	W	HRS	CHK	TEST BASIS
Penn	9790-9975	P	25	17	24		

GOR	GTY	CP	TP	BHP	POT DATE	TREATMENT
					5-20-74	A/2000

CSG 13 3/8 - 296 w/250 5 1/2 - 10,020 w/600
8 5/8 - 4217 w/1500

COUNTY LEA, NEW MEXICO FIELD SAUNDERS PERMO (PENN)
WELL: CHARLES B. GILLESPIE,JR.#8 STATE "G" ELEV DF 4209'*

DATE	WELL RECORD REACHED T. D.	SPL (LOG) MARKERS
	OTD 10,261'	S.A. (4195)
	Old Prod. Zone Pf 9955-9975	Abo (7780)
		Wlfc (9105)
	NEW WORK DONE:	Penn (9380)
	OTD 10,261'	
	Pf 9790-9805	
	9846-9861	
	A/2000	
		The Subsurface Library
	(6-19-74)	P. O. Box 942
		Midland, Texas

COUNTY LEA, N. M. FIELD SAUNDERS (PERMO PENN)

OPR CHARLES B. GILLESPIE, JR.

LSE STATE "M" WELL NO. 6

OC Sec. 3, T-15-S, R-33-E (M)
660' FSL & 660' FWL Sec.

UNIQUE NO. 30-025-26612

MAPS CO-ORD

F. R. 1-2-80 OBJ 10,050' RT SPUD

CTR LAHEE CLASS ELEV D. F.

LOGS SPLS GL 4195' op

TD 10,050' PBD 10,006' ABD LOC. P & A

PAY ZONE	PROD INTERVAL	IP	BO	W	HRS	CHK	TEST BASIS
Penn	9897-9961'	P	5	34	24		

GOR	GTY	CP	TP	BHP	POT DATE	TREATMENT
440					6-29-80	A/3000

CSG 13-3/8 - 300 - 350 5½L - 4100-10048 - 700
8-5/8 - 4208 - 1600

COUNTY LEA, N. M. FIELD SAUNDERS (PERMO PENN)

WELL: CHARLES B. GILLESPIE, JR. #6 STATE "M" ELEV

DATE	WELL RECORD REACHED T. D.	SPL (LOG) MARKERS
	TD 10,050', PB 10,006'	Anhy (1532)
		Salt (1643)
	DST 9789-9815', Op 90", R/392' GCM,	Yates (2676)
	60"/468, FP 127-85, 120"/468, HP	San And (4206)
	4549-4549	B/San And (5746)
	DST 9825-80', Op 90", R/520' G&OCM,	Padd (5989)
	60"/659, FP NR, 120"/659	Clfk (6395)
	DST 9894-9935', Op 90", GTS 6", no est,	Tubb (7053)
	R/372' WCM, 60"/520, FP 141-197,	Abo (7696)
	120",505, HP 4598-4598	Wolfc (9105)
	Pf 48/9936-48; 28/9954-61	Penn (9392)
	A/1 bbls mdy oil/1 hr	Saunder lm (9760)
	Pf 32/9897-9905; 36/9908-17	
	A/2000 (9897-9961)	
	(8-27-80)	

The Subsurface Library
P. O. Box 2599
Midland, Texas

COUNTY LEA , NEW MEXICO FIELD SAUNDERS PERMO (PENN)

OPR CHARLES B. GILLESPIE, JR.

LSE STATE "G" WELL NO. 8

LOC Sec 3, T-15-S, R-33-E (L)
1980 FSL & 660 FWL of Sec
FRC-OWWO-Orig. Amerada Petro. #8 State 5B

UNIQUE NO. 30-025-01215

MAPS CO-ORD

F. R. 6-19-74 OBJ Re SPUD 5-10-74

CTR LAHEE CLASS ELEV D. F. 4209'*

LOGS SPLS GL

TD 10,261' PBD ABD LOC. P & A

PAY ZONE	PROD INTERVAL	IP	BO	W	HRS	CHK	TEST BASIS
Penn	9790-9975	P	25	17	24		

GOR	GTY	CP	TP	BHP	POT DATE	TREATMENT
					5-20-74	A/2000

CSG 13 3/8 - 296 w/250 5 1/2 - 10,020 w/600
8 5/8 - 4217 w/1500

COUNTY LEA, NEW MEXICO FIELD SAUNDERS PERMO (PENN)

WELL: CHARLES B. GILLESPIE, JR. #8 STATE "G" ELEV DF 4209'*

DATE	WELL RECORD REACHED T. D.	SPL (LOG) MARKERS
	OTD 10,261'	S.A. (4195)
	Old Prod. Zone Pf 9955-9975	Abo (7780)
		Wlfc (9105)
	NEW WORK DONE:	Penn (9380)
	OTD 10,261'	
	Pf 9790-9805	
	9846-9861	
	A/2000	
		The Subsurface Library
	(6-19-74)	P. O. Box 942
		Midland, Texas

MALCO REFINERIES, Inc.
SCOUT REPORT

Field Saunders

Scout Dist. No.

COMPANY Amerada WELL NO. 2 FARM State SC

County Lea State

Spud 2-6-52 Comp. 3-11-52

Contractor Method

El. D. F. 4203 Gr.

FORMATIONS: Penetrated

PA	1700 (Gb)
PX	1,20
BX	2,78
TYL	2661
TSR	
PX	3459
TGb	
TPA	4720 B
TG1	
TCF	6110
T. Tubbs	7105
T. Abo	7765
T. Bough C	9103
T. Penn.	9365
T. Miss.	9103
T. Dev.	9365
T. Mont.	
T. Simp.	
T. McKee	
T. Ell.	
T. Pre-Cam.	

S'
S'
S'
S'
S'
S'

Grav. 39.2 GOR 1498-1
FCP Pm. SICP
FTP SITP

Sec. 20 Twp. 15 S Rge. 33 E

Loc. 660' FN FL 660' FW FS

20,000' 13 3/8-225-250
8 5/8-1235-1500

4/13 ~~8445~~ L.
2 2 TR 10,020 RC 9950 pump Test
2 9911-9950 open hole rec.
4 5 1/2 x 5 CM FP 25 15 Bw 20
pump 60 SPM 45 bbl
3-19 TD 10,020 ft PBTD 9950 ft
flowed 4 hr treated 4 hr 7 bbl oil
9 hr 60 203 BO 3 bl 12 bbl 1/2 inch

CASING & CEMENT

Size	Depth	Sax
5 1/2	9946	600

COMPLETION RECORD

T. D. 10020 LPB 9950
T. P. 9845
IP 457 BOPD
Tubing 2 Ch. 11/64 9941
Packer 9524
Perf.

SHOOTING RECORD

Qts. From
Qts. From
Qts. From
Results

ACIDIZING RECORD

Gal. Zone
Gal. Zone
Gal. Zone
Results

The Subsurface Library
P. O. Box 942
Midland, Texas

MALCO REFINERIES, Inc.
SCOUT REPORT

WEEKLY REPORT

Field Saunders

Scout Dist. No. 5-A

COMPANY Amerada WELL NO. 1 FARM State S. O.

County Lea State N.M.

Spud 6-1-52 Comp. [illegible]

Contractor Method

El. D. F. 4138 Gr.

Sec. 10 Twp. 15 S Rge. 33 E

Loc. FN. FE 1980' FS 1980' FW

10,000' Test

TD 305 PB. WOC 33 3/8-296-w/300

[illegible]

FORMATIONS: Penetrated

TA

TX

BX

TYL

TSR

TQ

TGb

TSA 4225 Lt.

TG1

TCF

T Tubbs

T Abo 7722

T Hueco 9115

T. Penn. [illegible]

T. Miss.

T. Dev.

T. Mont.

T. Simp.

T. McKee

T. Ell.

T. Pre-Cam.

[illegible]

The Subsurface Library
P. O. Box 942
Midland, Texas

S/

S/

S

S/

S/

S/

Grav. [illegible] GOR [illegible]

FCP SICP

FTP 95 SITP

CASING & CEMENT

Size	Depth	Sax
[illegible]	[illegible]	300
[illegible]	[illegible]	[illegible]

COMPLETION RECORD

T. D. 10,000' PB

T. P. 9164

IP/F [illegible] Polyline

Tubing 2 Ch. 1/2 @ 10007

Packer

Perf.

SHOOTING RECORD

Qts. From

Qts. From

Qts. From

Results

ACIDIZING RECORD

Gal. Zone

Gal. Zone

Gal. Zone

Results

MALCO REFINERIES, Inc.
SCOUT REPORT WEEKLY REPORT

Field: Saunders Pool

Scout Dist. No.

COMPANY: Amerada Petr. WELL NO. 1 FARM: State S. F.

County: Lea State: N. M.

Spud: 11-1-51 Comp. 1-2-52

Contractor: Method:

El. D. F. 4196 Gr.

FORMATIONS: Penetrated

TA	1552
TX	1634
BX	2520
TYL	2690
TSR	
TQ	
TGb	
TSA	4228
TG1	
TCF	
T. Tubbs	
T. Abo	7779
T. Hueco	
T. Penn.	9428
T. Miss.	
T. Dev.	
T. Mont.	
T. Simp.	
T. McKee	
T. Ell.	
T. Pre-Cam.	
JCQ 9140	

S/
S/
S/
S/
S/
S/

Grav. 55.5 GOR 1193
FCP SICP
FTP SITP

Sec. 10 Twp. 15 S Rge. 33 E

Loc. 660' FN. 1980' FE FS FW

10,000' Test
Location

[illegible]

The Subsurface Library
P. O. Box 942
Midland, Texas

CASING & CEMENT

Size	Depth	Sax

COMPLETION RECORD

T. D. 10,133 PB 10006
T. P. 9940
IP/F 224.81 BOPD
Tubing 1½" Ck. 2" @ 10,000
Packer CP
Perf.

SHOOTING RECORD

Qts. From
Qts. From
Qts. From
Results

ACIDIZING RECORD

Gal. Zone
Gal. Zone
Gal. Zone
Results

MALCO REFINERIES, Inc.
SCOUT REPORT

WEEKLY REPORT

Field Saunders Pool

Scout Dist. No. 5

COMPANY Amerada WELL NO. 1 FARM State [illegible]

County Lea State N.M.

Spud [illegible] Comp.

Contractor Method

El. D. F. 4201 Gr.

FORMATIONS: Penetrated

TA
TX
RX
TYL
TSR
TQ
TGb
TSA 4213
TG1
TCF
T Tubbs
T Abo 7770
T Hueco
T. Penn. 8540 (xx)
T. Miss.
T. Dev.
T. Mont.
T. Simp.
T. McKee
T. Ell.
T. Pre-Cam.

S/
S/
S/
S/
S/
S/

Grav. 38.5 GOR 1,538
FCP SICP
FTP SITP

Sec. 10 Twp. 15 S Rge. 33 E

Loc. 660' FN. FE. FS. 1980' FW

9900' east
[illegible] 660' [illegible]
[illegible] - 2[illegible] w/ 250

9/6 8 3845 A.
9/14 16,226
9/16 8 7531 L
10/2 8 9050 L
10/6 8 7916 L
10/16 8 9908 L
DST 9781-9822 op. 4 hr
9/3 Rec. 270' m + 7240'
X water
Pres. 3500
DST 9822-77 op. 4 hr 22 c
9/4 m/4 o/4
gr. 35 Bo w 4 hr
Gas!!
Rec. 620' oil + 60' X water
BHFP. 950 1570 ip 1875
10-24 TD 10,077 L. Ran 5½
DST 9907-45 [illegible]
[illegible] 5264 Oil 1000
Single [illegible] 340 KW FP 215-[illegible]
[illegible]
DST 9958-10,000 - op 1 hr. Rec. [illegible]
DST 10,054-77 - op 1 hr. Rec. [illegible]

The Subsurface Library
P. O. Box 942
Midland, Texas

CASING & CEMENT

Size	Depth	Sax
8 5/8	4042	[illegible]
5½	9895	600

COMPLETION RECORD

T. D. 10077 L PB 9895
T. P. 9810
IP 354 BO 38 bbw
Tubing 2 Ch. 1 jt 9865
Packer 9832
Perf.

SHOOTING RECORD

Qts. From
Qts. From
Qts. From
Results

ACIDIZING RECORD

Gal. Zone
Gal. Zone
Gal. Zone
Results

Log 11-15-53

amerada #3 State 8l

LOG

[illegible]

The Subsurface Library
P. O. Box [illegible]
Midland, Texas

The [illegible]
P. O. Box [illegible]
Midland, Texas

COUNTY LEA, N.M. FIELD SAUNDERS (PERMO-PENN)

OPR YATES PET. CORP

LSE VALENTINE "VL" STATE WELL NO. 1

LOC Sec 10, T-15-S, R-33-E (K)

2310 FSL & 1650 FWL of Sec

API NO. 30-025-27981 CO-ORD

F.R. 10-20-82 OBJ 10,300'RT ELEV KB

CTR Ard SPUD 10-18-82 DF

TD 10,400 PBD 10,300 P & A GL 4188' op

PAY ZONE	PROD INTERVAL	IP	BO	W	HRS	CHK	TEST BASIS
Penn	9899-10,114	P	40	200	24		

GOR	GTY	CP	TP	BHP	POT DATE	TREATMENT
5625	42				1-10-83	A/6000

CSG 13 3/8-455-450 5½-10,397-1300

8 5/8-4190-2250

MIDLAND OIL SCOUTS ASSOCIATION WELL RECORD

COUNTY LEA, N.M. FIELD SAUNDERS (PERMO-PENN)

LEASE YATES PET. CORP. #1 VALENTINE "VL" STATE

TD 10,400'; PB 10,300';

Pf/9899-9947, 10,011-114, A/6000

(1-26-83)

SPL (LOG) MARKERS

Rust (1535)

B/Salt (2575)

Yates (2675)

Qn (3470)

SA (4225)

Glor (5795)

Tubb (7050)

Abo (7800)

Wlfc (9195)

Wlfc Mrk (9410)

Cisco (9900)

The Submarine Library
P. O. Box 2593
Midland, Texas

COUNTY LEA, N.M. FIELD SAUNDERS (PERMO U/PENN)

OPR YATES PET. CORP

LSE ROBIN "UT" STATE WELL NO. 1

LOC Sec 10, T-15-S, R-33-E (N)

660 FSL & 1980 FWL of Sec

API NO. 30-025-28132 CO-ORD

F.R. 2-2-83 OBJ 10,350'RT ELEV KB

CTR Ard #6 SPUD 1-26-83 DF

TD 10,250 PBD 10,003 P & A GL 4182'*

PAY ZONE	PROD INTERVAL	IP	BO	W	HRS	CHK	TEST BASIS
Penn	9865-9974	P	279	280	24		

GOR	GTY	CP	TP	BHP	POT DATE	TREATMENT
1065	40				3-29-83	A/7000

CSG 13 3/8-455-450 5½-10,050-850

8 5/8-4159-1850

MIDLAND OIL SCOUTS ASSOCIATION WELL RECORD

COUNTY LEA, N.M. FIELD SAUNDERS (PERMO U/PENN)

LEASE YATES PET. CORP #1 ROBIN "UT" STATE

TD 10,250'; PB 10,003';

Pf/10/9965-79, 22/9928-74, A/7000

No c or tsts

(4-13-83)

SPL (LOG) MARKERS

Rust (1546)

B/Salt (2592)

Yates (2674)

Qn (3480)

SA (4144)

Glor (5788)

Tubb (7078)

Abo (7804)

Wlfc lm (9216)

Wlfc mkr (9434)

Virigilian (9796)

COUNTY LEA, N.M. FIELD SAUNDERS (PERMO-PENN)

OPR YATES PET. CORP

LSE VALENTINE "VL" STATE WELL NO 1

Sec 10, T-15-S, R-33 E (K)

2310 FSL & 1650 FWL of Sec

FRC-OWWO-Orig Yates Pet. #1 Valentine "VL" State

API NO. 30-025-27981 CO-ORD

F.R. OBJ RE 4-1-83 ELEV KB

CTR SPUD 10,300 DF

TD 10,400 PBD P & A GL 4185'*

PAY ZONE	PROD INTERVAL	IP	BO	W	HRS	CHK	TEST BASIS
	9797-10,114	NO NEW POTENTIAL					

GOR	GTY	CP	TP	BHP	POT DATE	TREATMENT
					4-16-83	A/3500

CSG 13 3/8-455-450 5½-10,397-1300

8 5/8-4190-2250

MIDLAND OIL SCOUTS ASSOCIATION WELL RECORD

NTY LEA, N.M. FIELD SAUNDERS (PERMO PENN)

YATES PET. CORP #1 VALENTINE "VL" STATE

OTD 10,400'; Comp 1-10-83

Old Prod Pt 9899-10,114

NEW WRK:

PB 10,300';

Pf/1@ 9797, 9798, 9799, 9803, 9804, 9808, 9809, 9810, 9812, 9813, 9814, 9837, 9849, 9882, 9883, 9884, 9885,

A/3500 (9797-10,114)

(5-18-83)

SPL (LOG) MARKERS

Rust (1535)

B/Salt (2575)

Yates (2675)

Qn (3470)

SA (4225)

Glor (5795)

Tubb (7050)

Abo (7800)

Wlfc (9195)

Wlfc Mkr (9410)

Cisco (9900)

THE SUBSURFACE LIBRARY
P. O. BOX 2538
MIDLAND, TX 79702

COUNTY LEA, N.M. FIELD SAUNDERS (PERMO-PENN)

OPR YATES PET. CORP.

LSE VALENTINE "VL" STATE WELL NO. 1

C Sec 10, T-15-S, R-33-E (K)

2310 FSL & 1650 FWL of Sec

FRC-OWWO-Orig Yates Pet. #1 Valentine "VL" State

API NO. 30-025-27981 CO-ORD

F.R. OBJ RE ELEV KB

CTR SPUD 7-7-83 DF

TD 10,400 PBD 10,300 P & A GL 4185'*

PAY ZONE	PROD INTERVAL	IP	BO	W	HRS	CHK	TEST BASIS
Permo Penn	9797-10,114	NO	NEW POTENTIAL				

GOR	GTY	CP	TP	BHP	POT DATE	TREATMENT
					7-27-83	A/20,000

CSG 13 3/8-455-450 5½-10,397-1300

8 5/8-4190-2250

MIDLAND OIL SCOUTS ASSOCIATION WELL RECORD

NTY LEA, N.M. FIELD SAUNDERS (PERMO-PENN)

YATES PET. CORP. #1 VALENTINE "VL" STATE

OTD 10,400'; Comp 1-10-83

Old Prod Pf 9899-10,114

Re-Wrkd 4-16-83, Prod Pf 9797-10,114

NEW WORK:

PB 10,300';

Pf/1@ 9912, 9916, 9918, 9919, 9923, 9925, 9929, 9934, 9936, 9938, A/20,000

(8-17-83)

SPL (LOG) MARKERS

Rust	(1535)
B/Salt	(2575)
Yates	(2675)
Qn	(3470)
SA	(4225)
Glor	(5795)
Tubb	(7050)
Abo	(7800)
Wlfc	(9195)
Wlfc Mkr	(9410)
Cisco	(9900)

THE SUBSURFACE LIBRARY
P. O. BOX 2538
MIDLAND, TX 79702

NTY LEA, N. MEX. FIELD SAUNDERS (PENN)
SOLAR OIL COMPANY
SE LOWE STATE WELL NO. 1
LOC Sec 10, T-15-S, R-33-E (L)
1980 FSL & 660 FWL of Sec

UNIQUE NO. 30-025-23056
MAPS CO-ORD
F. R. 3-13-69 OBJ 10,100' RT SPUD 3-14-69
CTR Sharp LAHEE CLASS ELEV D. F. 4204' L/S
LOGS SPLS GL
TD 10,200' PBD 10020' ABD LOC. P & A

PAY ZONE	PROD INTERVAL	IP	BO	W	HRS	CHK	TEST BASIS
Penn	9937-10,000	P	110	15	24		

GOR	GTY	CP	TP	BHP	POT DATE	TREATMENT
909	41				6-4-69	Ac/1500

SG 13 3/8" @ 355 w/365
8 5/8" @ 4280 w/700
5 1/2" @ 10199 w/500

COUNTY LEA, N. MEX. FIELD SAUNDERS (PENN)
WELL: SOLAR OIL COMPANY #1 LOWE STATE ELEV 4204' DF L/S

TE	WELL RECORD	REACHED T. D.	SPL (LOG) MARKERS
	TD 10,200'	PBD 10,020'	Anhy (1552)
	No Cores or Tests		B/Salt (2550)
	Pfs. 10,072-150 (OA) Ac/750.		Yates (2673)
	Swb 165 BLW		Queen (3473)
	Perf. 1 @ 9937,9940,9943,9951,9957,		SA (4144)
	9966,9968,9981,9985,9991,10000,10037		Glor (5700)
	Ac/1500		Tubb (7048)
			Abo (7704)
			Wlfc (9253)
	(7-10-69)		Saunders lm
			(9802)

The Subsurface Library
P. O. Box 942
Midland, Texas

COUNTY LEA, N.M. FIELD SAUNDERS (PERMO-PEN

OPR CHARLES B. GILLESPIE, JR.

LSE STATE "M" COM WELL NO. 3

LOC Sec 10, T-15-S, R-33-E (B)
660 FNL & 1980 FEL of Sec
FRC-OWWO-Orig Amereada Pet. #1 State "SF"

API NO. 30-025-01235 CO-ORD

F.R. OBJ ELEV KB

CTR RE SPUD 7-18-83 DF

TD 10,133 PBD 9940 P & A GL 4196'op

PAY ZONE	PROD INTERVAL	IP	BO	W	HRS	CHK	TEST BASIS
Penn	9860-9930	NO NEW POTENTIAL					

GOR	GTY	CP	TP	BHP	POT DATE	TREATMENT
					8-2-83	A/500

CSG 13 3/8-295-250 5½-10,025-600
9 5/8-4230-1000

MIDLAND OIL SCOUTS ASSOCIATION WELL RECORD

COUNTY LEA, N.M. FIELD SAUNDERS (PERMO-PENN)

WELL CHARLES B. GILLESPIE, JR. #3 STATE "M" COM

	(LOG) MARKERS	
OTD 10,133'; Comp 1959	Yates	(2690)
Old Prod Zn 9955-90	SA	(4228)
	Abo	(7779)
NEW WORK:	Wlfc	(9140)
PB 9940';		
Pf/9860-90, 9908-30, A/500		
(12-21-83)		

COUNTY LEA, N. M. FIELD SAUNDERS (PENN)

OPR MARALO, INC.

LSE STATE "10" WELL NO. 1

LOC Sec. 10, T-15-S, R-33-E (O)

660' FSL & 2310' FEL Sec.

API NO. 30-025-28606 CO-ORD

F.R. 2-15-84 OBJ 10,200' RT ELEV KB

CTR SPUD 2-16-84 DF

TD 10,205' PBD 10,148' P & A GL 4179' op

PAY ZONE	PROD INTERVAL	IP	BO	W	HRS	CHK	TEST BASIS
	9869-9978'	P	143	272	24		

GOR	GTY	CP	TP	BHP	POT DATE	TREATMENT
1399	40.5				4-17-84	A/2000

CSG 13-3/8 - 432 - 400 5½ - 10205 - 1175

8-5/8 - 4030 - 1550

MIDLAND OIL SCOUTS ASSOCIATION WELL RECORD

COUNTY LEA, N. M. FIELD SAUNDERS (PENN)

WELL MARALO #1 STATE "10"

TD 10,205', PB 10,148'

Pf 5/9869-72; 11/9944-49; 13/9954-68; 7/9972-78

A/2000

P/46 BO, 199 BW/24 hrs (9869-9978)

(4-25-84)

SPL (LOG) MARKERS

Yates (2681)

San And (4240)

Glor (5802)

Tubb (7087)

Cisco (9942)

THE SUBSURFACE LIBRARY
P. O. BOX 2538
MIDLAND, TX 79702

COUNTY LEA N.M. FIELD SAUNDERS (PENN)

OPR MARALO, INC.

LSE STATE "10" WELL NO. 1

LOC Sec 10 T-15-S R-33-E (O)

660 FSL & 2310 FEL of Sec.

FRC-CWWC Orig. Maralo Inc. #1 State "10"

API NO. 30-025-28606 CO-ORD

F.R. OBJ ELEV KB

CTR Re SPUD 5-7-85 DF

TD 10205 PBD 9990 P & A GL 4279' cp

PAY ZONE	PROD INTERVAL	IP	BO	W	HRS	CHK	TEST BASIS
Penn	9944-9968	NO NEW POTENTIAL					

GOR	GTY	CP	TP	BHP	POT DATE	TREATMENT
					6-26-85	A/2600

CSG 9 5/8 [illegible] 400 5 1/2-10205-[illegible]75

8 5/8-4030-[illegible]50

MIDLAND OIL SCOUTS ASSOCIATION WELL RECORD

COUNTY LEA N.M. FIELD SAUNDERS (PENN)

WELL MARALO, INC. #1 STATE "10"

DATE		SPL (LOG) MARKERS
	CTD 10205 Comp 4-17-84	Yates (2618)
	Prod. pfs/ 9869-9978	SA (4240)
		Glor (5802)
	NEW WORK:	Tubb (7987)
		Cisco (9947)
	CTD 10205 PB 9990	
	Sqzd pfs/ 9869-9978 w/ 200sx	
	Pf/ 9944-49, 9956-9968	
	A/ 2600	
	(6-19-85)	

THE SUBSURFACE LIBRARY

P. O. BOX [illegible]

MIDLAND, TEXAS [illegible]

COUNTY LEA, N.M. FIELD SAUNDERS PERMO (U/PENN)

OPR MARALO, INC.

LSE STATE "10" WELL NO. 2

Sec 10, T-15-S, R-33-E (J)

1980 FSL & FEL of Sec

API NO. 30-025-28646 CO-ORD

F.R. 3-21-84 OBJ 10,200'RT ELEV KB

CTR Wm-Bros SPUD 2-19-84 DF

TD 10,200 PBD P & A GL 4181'op

PAY ZONE	PROD INTERVAL	IP	BO	W	HRS	CHK	TEST BASIS
	9818-9998	P	160	85	24		

GOR	GTY	CP	TP	BHP	POT DATE	TREATMENT
843	40.5				5-19-84	A/4000

CSG 13 3/8-405-400 5½-10,200-1180

8 5/8-4000-1400

MIDLAND OIL SCOUTS ASSOCIATION WELL RECORD

COUNTY LEA, N.M. FIELD SAUNDERS PERMO (U/PENN)

MARALO, INC. #2 STATE "10"

TD 10,200';

Pf/5 9818-22, 1@ 9847, 9849, 9883,

9887, 8/9916-23, 8/9942-47, 3/9962-64

1@ 9975, 9977, 9996, 9998, A/4000

S&F/20 BO, 19 BW/4'

P/160 BO, 85 BW/24' (9918-9998)

(5-30-84)

SPL (LOG) MARKERS

Yates (2685)

SA (4241)

Glor (5283)

Tubb (7074)

Cisco (9904)

THE SUBSURFACE LIBRARY
P. O. BOX 2533
MIDLAND, TX 79702

COUNTY LEA, N.M. FIELD SAUNDERS (PERMO-PENN) (WILDCAT)
OPR SAGE ENERGY CO.
LSE LOWE STATE WELL NO. 2
LOC Sec 10, T-15-S, R-33-E (M)
660 FSL & 990 FWL of Sec

Sec. 10

API NO. 30-025-28720 CO-ORD
F.R. 5-9-84 OBJ 10,300'RT ELEV KB
CTR SPUD 5-17-84 DF
TD 10,058 PBD 10,013 P & A GL 4188'op

PAY ZONE	PROD INTERVAL	IP	BO	W	HRS	CHK	TEST BASIS
Penn	9951-9970	P	100	32	24		

GOR	GTY	CP	TP	BHP	POT DATE	TREATMENT
1500	42				7-6-84	A/13,000

CSG 12 3/4-411-375 5½-10,058-400
8 5/8-4230-1000

MIDLAND OIL SCOUTS ASSOCIATION WELL RECORD

COUNTY LEA, N.M. FIELD SAUNDERS (PERMO-PENN)(WILDCAT)
WELL: SAGE ENERGY CO. #2 LOWE STATE

TD 10,058'; PB 10,013';
Pt/9951-70, A/3000, S/30-80% oil,
gd show gas, Re-A/10,000

(8-1-84)

SPL (LOG) MARKERS

Anhy	(1552)
B/Salt	(2550)
Yates	(2673)
Qn	(3473)
SA	(4144)
Glor	(5700)
Tubb	(7048)
Abo	(7704)
Wlfc	(9253)
Saunders lm	(9802)

THE SUBSURFACE LIBRARY
P. O. BOX 2538
MIDLAND, TX 79702

COUNTY LEA, NEW MEXICO FIELD SAUNDERS PERMO (PENN)

OPR CHARLES B. GILLESPIE, JR

LSE STATE "F" WELL NO. 2

LOC Sec(4), T-15-S, R-32-E (F)

1980 FSL & 660 FEL of Sec.

UNIQUE NO. 30-025-26611

MAPS CO-ORD

F. R. 1-2-80 OBJ 10,050'RT SPUD 3-28-80

CTR Moran LAHEE CLASS ELEV D. F.

LOGS SPLS GL 4203' GR

TD 10028 PBD 10013 ABD LOC. P & A

PAY ZONE	PROD INTERVAL	IP	BO	W	HRS	CHK	TEST BASIS
Penn	9111-9982	P	12	28	24		

GOR	GTY	CP	TP	BHP	POT DATE	TREATMENT
	40.4				6-1-80	A/3500

CSG 13 3/8-305-350 5½-L-4059-10028-1400

8 5/8-4225-1600

COUNTY LEA, N.M. FIELD SAUNDERS PERMO (PENN)

LEASE CHARLES B. GILLESPIE, JR. #2 STATE "F" ELEV

WELL RECORD	REACHED T. D.	SPL (LOG) MARKERS	
TD 10028'; PB 10013		Anhy	(1529)
No ¢ or Tsts		Salt	(1626)
PF/OA/9111-9982, A/3500		Yates	(2680)
		SA	(4210)
		Glcr	(5724)
		Padd	(5973)
		Tubb	(7046)
		Abo	(7685)
		Wlfc	(9106)
		Penn	(9392)
(7-30-80)			

The Subsurface Library
P. O. Box 2538
Midland, Texas

Map shows #3, no scout tkt.

660 FSL + 660 FEL

Need #3 well

COUNTY LEA, N.M. FIELD SAUNDERS (U/PENN)

OPR YATES PET. CORP

LSE COQUINA "WK" STATE WELL NO. 2

Sec 15, T-15-S, R-33-E (D)

330 FNL & 990 FWL of Sec

API NO. 30-025-28475

F.R. 11-16-83 OBJ 10,200'RT CO-ORD

CTR Landis 11-19-83 ELEV KB

TD 10,224 GRND DF

PBD 10,098 P & A GL 4192'op

PAY ZONE	PROD INTERVAL	IP	BO	W	HRS	CHK	TEST BASIS
U/Penn	9979-10,014	P	80	220	24		
			98 MCF				

GOR	GTY	CP	TP	BHP	POT DATE	TREATMENT
1225	43				1-23-84	A/5000

CSG 13 3/8-455-450 5½-10,224-1080

8 5/8-4195-1710

MIDLAND OIL SCOUTS ASSOCIATION WELL RECORD

COUNTY LEA, N.M. FIELD SAUNDERS (U/PENN)

LSE YATES PET. CORP #2 COQUINA "WK" STATE

TD 10,224'; PB 10,098';

Pf/20/9979-10,014, A/5000

No ¢ or tst

(2-1-84)

SPL (LOG) MARKERS

Rust (1530)
Salt (2568)
Yates (2661)
Qn (3468)
SA (4149)
Glor (5794)
Tubb (7084)
Abo (7803)
Wlfc lm (9243)
Wlfc Mkr (9445)
Virgilian (9766)
Bo C (9962)
Dolo (10,224)

THE SUBSURFACE LIBRARY
P. O. BOX 2538
MIDLAND, TX 79702

COUNTY LEA, N.M. FIELD SAUNDERS (PENN)

OPR YATES PET. CORP

LSE COQUINA "WK" STATE WELL NO. 2

LOC Sec 15, T-15-S, R-33-E (D)

330 FNL & 990 FWL of Sec

FRC-OWWO-Orig Yates Pet. #2 Coquina "WK" State

API NO. 30-025-28475 CO-ORD

F.R. OBJ ELEV KB

CTR RE SPUD 3-7-85 DF

TD 10,224 PBD 9950 P & A GL 4192'op

PAY ZONE	PROD INTERVAL	IP	BO	W	HRS	CHK	TEST BASIS
Penn	9502-9907	NO NEW POTENTIAL					

GOR	GTY	CP	TP	BHP	POT DATE	TREATMENT
					3-28-85	A/12,000

CSG 13 3/8-455-450 5½-10,224-1080

8 5/8-4195-1710

MIDLAND OIL SCOUTS ASSOCIATION WELL RECORD

COUNTY LEA, N.M. FIELD SAUNDERS (PENN)

WELL: YATES PET. CORP. #2 COQUINA "WK" STATE

DATE

OLD 10,224'; Comp 1-23-84

Prod Pf/9979-10,014

NEW WORK:

PB 9950';

Pf/1@ 9872, 9873, 9874, 9894, 9895, 9896, 9897, 9905, 9906, 9907, A/2500, Pf/1@ 9699, 9700, 9701, 9702, 9707, 9708, 9709, 9740, 9741, 9742, 9743, A/2500

Pf/1@ 9566, 9567, 9580, 9592, 9605, 9611, 9617, 9618, 9624, 9629, 9630, 9640, 9651, 9656, 9657, A/5000

Pf/1@ 9502, 9503, 9511, 9512, 9524, 9525, A/2000

(4-24-85)

THE SUBSURFACE LIBRARY
P. O. BOX 2533
MIDLAND, TX 79702

SPL (LOG) MARKERS

Rust	(1530)
Salt	(2568)
Yates	(2661)
Qn	(3468)
SA	(4149)
Glor	(5794)
Tubb	(7084)
Abo	(7803)
Wlfc Im	(9243)
Wlfc Mkr	(9445)
Virgilian	(9766)
Bo C	(9962)
Dolo	(10,224)

COUNTY LEA, N.M. FIELD SAUNDERS PERMO (U/PENN)

OPR YATES PET. CORP

LSE COQUINA "WK" STATE WELL NO. 1

C Sec 15, T-15-S, R-33-E (C)

330 FNL & 2310 FWL of Sec

API NO. 30-025-28109 CO-ORD

F.R. 1-19-83 OBJ 10,500'RT ELEV KB 4196'*

CTR Ard #6 SPUD 12-30-82 DF

TD 10,181 PBD 10,116 P & A GL 4185'op

PAY ZONE	PROD INTERVAL	IP	DO	W	HRS	CHK	TEST BASIS
Penn	9867-9999	P	105	223	24		

GOR	GTY	CP	TP	BHP	COT DATE	TREATMENT
1076					4-19-83	A/8500

CSG 13 3/8-461-450 5½-10,181-800

8 5/8-4175-2835

MIDLAND OIL SCOUTS ASSOCIATION WELL RECORD

COUNTY LEA, N.M. FIELD SAUNDERS PERMO (U/PENN)

YATES PET. CORP #1 COQUINA "WK" STATE

TD 10,181'; PB 10,116';

Pf/4/9867-69, 4/9925-27, 19/9953-99

A/8500

(5-18-83)

SPL (LOG) MARKERS

Rust (1532)

B/Salt (2593)

Yates (2672)

Qn (3478)

SA (4153)

Glor (5794)

Tubb (7080)

Abo (7802)

Wlfc (9240)

Wlfc Mkr (9453)

Virgilian (9874)

THE SUBSURFACE LIBRARY
P. O. BOX 2538
MIDLAND, TX 79702

COUNTY LEA, N.M. FIELD SAUNDERS (PERMO)(U/PENN)

OPR TOWNER PET. CO.

LSE FEDERAL "15" WELL NO. 1

Sec 15, T-15-S, R-33-E (G)

1980 FNL & FEL of Sec

API NO. 30-025-28112 CO-ORD

F.R. 1-19-83 OBJ 10,500'RT ELEV KB

CTR SPUD 1-15-83 DF

TD 10,500 PBD P & A 4-15-83 GL 4180'op

PAY ZONE	PROD INTERVAL	IP	BO	W	HRS	CHK	TEST BASIS
	PLUGGED AND ABANDONED						

GOR	GTY	CP	TP	BHP	POT DATE	TREATMENT

CSG 20-40 9 5/8-4256

13 3/8-420-425 5½-9842-400

MIDLAND OIL SCOUTS ASSOCIATION WELL RECORD

NTY LEA, N.M. FIELD SAUNDERS (PERMO)(U/PENN)

L: TOWNER PET. CO. #1 FEDERAL "15"

E TD 10,500'; P&A 4-15-83

Rn 2 DSTs 11TE

Pf/70/9490-9629, 50/9652-9752

A/7500 (9490-9629), S/Dry

A/3000 (9652-9752), S/9 BF/6 rns, 10% oil, Abo

(6-22-83)

SPL (LOG) MARKERS

Yates	(2669)
Qn	(3472)
SA	(4149)
Tubb	(7076)
Abo	(7798)
Wlfc	(9260)
Wlfc Mkr	(9920)

THE SUBSURFACE LIBRARY
P. O. BOX 2538
MIDLAND, TX 79702

COUNTY LEA, N. M. FIELD SAUNDERS (PERMO)(U/PENN)

OPR TOWNER PETROLEUM CO.

SE FEDERAL "15" WELL NO. 1

LOC Sec. 15, T-15-S, R-33-E (G)

1980' FNL & 1980' FEL Sec.

REISSUED TO CORRECT INFO

API NO. 30-025-28112 CO-ORD

F.R. 1-19-83 OBJ 10,500' RT ELEV KB

CTR 1-15-83 SPUD DF

TD 10,500' PBD P & A 4-15-83 GL 4180' op

PAY ZONE	PROD INTERVAL	IP	BO	W	HRS	CHK	TEST BASIS
	PLUGGED & ABANDONED						

GOR	GTY	CP	TP	BHP	POT DATE	TREATMENT

CSG 20 - 40 9-5/8 - 4256

13-3/8 - 420 - 425 5½ - 9842 - 400

MIDLAND OIL SCOUTS ASSOCIATION WELL RECORD

COUNTY LEA, N. M. FIELD SAUNDERS (PERMO)(U?PENN)

WELL TOWNER PET. #1 FEDERAL "15"

DATE		SPL (LOG) MARKERS
	TD 10,500', P&A 4-15-83	Yates (2669)
		Queen (3472)
	Ran 2 DST's - TITE	San And (4149)
	Pf 50/9652-9752	Tubb (7076)
	70/9490-9629	Abo (7798)
	A/8000 (-40 BLW)	Wolfc (9260)
	ReA/3000 (9652-9752)	XX Mkr (9480)
	S/dry.	U/Penn (9920)
	PB 9645'	
	A/7500 (9490-9629)	
	S/9 BF/6 runs, 10% oil	
	Did not rec ld	
	(6-22-83)	
	(8-24-83)	

THE SUBSURFACE LIBRARY
P. O. BOX 2553
MIDLAND, TX 79702

MALCO REFINERIES, Inc.
SCOUT REPORT

Field: Saunders

Scout Dist. No.

COMPANY: Amerada WELL NO. 1 FARM: STATE SC

County: Lea State: N.Mex.

Spud: 8-7-52 Comp: 10-13-52

Contractor: Method:

El. D. F.: 4210 Gr.:

FORMATIONS: Penetrated

TA 1527 Sd.
TX 1625
BX 2502
TYL 4670
TSR
TQ 3486
TGb
TSA 4229
TGl
TCF 6415
T. Tubbs
T. Abo 7463
T. Hueco 8105
T. Penn. 9346
T. Miss.
T. Dev.
T. Mont.
T. Simp.
T. McKee
T. Ell.
T. Pre-Cam.

S:
S:
S
S:
S:
S:

Grav. 46.8 GOR 1527
FCP gas SICP
FTP 600 SITP

Sec. 9 Twp. 15 S Rge. 33 E

Loc. 660' FN. 1980' FE. FS. FW

10,000' Test

Location

The Substance Library
P. O. Box 942
Midland, Texas

[illegible]

CASING & CEMENT

Size	Depth	Sax
5½	1310	600

COMPLETION RECORD

T. D. 10125 PB 9995
T. P. 9964
IP/F 376 BOPD+2 BW
Tubing 2 Ch. 7/64 @ 9951
Packer 9564
Perf.

SHOOTING RECORD

Qts. From
Qts. From
Qts. From
Results

ACIDIZING RECORD

Gal. Zone
Gal. Zone
Gal. Zone
Results

MALCO REFINERIES, Inc.
SCOUT REPORT

Field: Saunders

Scout Dist. No.

COMPANY: Amerada WELL NO. 4 FARM: STATE SC

County: Lea State: N.Mex.

Spud: 8-7-52 Comp: 10-13-52

Contractor: Method:

El. D. F.: 4210 Gr.:

FORMATIONS: Penetrated

TA 1527 Jal.
TX 1625
BX 2503
TYL 4670
TSR
TQ 3486
TGb
TSA 4229
TGl
TCF 6112
T Tubbs
T Abo 7463
T Hueco 9105
T. Penn. 7296
T. Miss.
T. Dev.
T. Mont.
T. Simp.
T. McKee
T. Ell.
T. Pre-Cam.

S:
S:
S:
S:
S:
S:

Grav. 44.8 GOR 1529
FCP flow SICP
FTP 600 SITP

Sec. 9 Twp. 15 S Rge. 33 E

Loc. 660' FN 1980' FE FS FW

10,000' Test

Location

The Subsurface Library
P. O. Box 942
Midland, Texas

[illegible]

CASING & CEMENT

Size	Depth	Sax
5 1/2	1211'	600

COMPLETION RECORD

T. D. 10125 PB 9995
T. P. 9964
IBPF 376 BOPD+2 Blw
Tubing 2 Ch. 7/64 @ 9957
Packer 9584
Perf.

SHOOTING RECORD

Qts. From
Qts. From
Qts. From
Results

ACIDIZING RECORD

Gal. Zone
Gal. Zone
Gal. Zone
Results

COUNTY LEA, N.M. FIELD SAUNDERS (U/PENN)

OPR MWJ PROD. CO.

LSE SAUNDERS "9" STATE WELL NO. 1

LOC Sec 9, T-15-S, R-33-E (H)

1980 FNL & 660 FEL of Sec

API NO. 30-025-27839 CO-ORD

F.R. 6-9-82 OBJ 10,200'RT ELEV KB

CTR SPUD 6-8-82 DF

TD 10,150 PBD 10,064 P & A GL 4198'op

PAY ZONE	PROD INTERVAL	IP	BO	W	HRS	CHK	TEST BASIS
U/Penn	9925-97	P	53	71	24		

GOR	GTY	CP	TP	BHP	POT DATE	TREATMENT
471					7-26-82	A/3000

CSG 13 3/8-392-700 5½=10,150-300

8 5/8-4237-1500

MIDLAND OIL SCOUTS ASSOCIATION WELL RECORD

COUNTY LEA, N. M. FIELD SAUNDERS (U/PENN)

OPR MWJ PROD. CO. # 1 SAUNDERS "9" STATE

	SPL (LOG) MARKERS
TD 10,150'; PB 10,064':	Wlfc (9225)
Pf/9925-97, A/3000	Penn (9780)
(9-8-82)	

The Schwartze Corp.
P. O. Box 2528
Midland, Texas

MWJ 1st day hole

COUNTY LEA, N.M. FIELD SAUNDERS (U/PENN)
OPR MWJ PROD. CO.
LSE SAUNDERS "9" STATE WELL NO. 1
LOC Sec 9, T-15-S, R-33-E (
1980 FNL & 660 FEL of Sec
FRC-OWWO-Orig MWJ Prod #1 Saunders "9" State
API NO. 30-025-27839 CO-ORD
F.R. OBJ ELEV KB
CTR RE SPUD 9-2-82 DF
TD 10,150 PBD 9910 P & A GL 4198'op

PAY ZONE	PROD INTERVAL	IP	BO	W	HRS	CHK	TEST BASIS
Penn	9806-96	NO NEW POTENTIAL					

GOR	GTY	CP	TP	BHP	POT DATE	TREATMENT
					9-21-82	A/2500

CSG 13 3/8-392-700 5½-10,150-300
8 5/8-4237-1500

MIDLAND OIL SCOUTS ASSOCIATION WELL RECORD

COUNTY LEA, N.M. FIELD SAUNDERS (U/PENN)
L: MWJ PROD. CO. #1 SAUNDERS "9" STATE

SPL (LOG) MARKERS

OTD 10,150'; Comp 7-26-82
Prod Pf 9925-97

NEW WORK:
PB 9910';
Pf/9806-09, 9817-20, 9829-36, 9846, 9850-60, 9862, 9865, 9874, 9883, 9896,
A/2500

(11-10-82)

Wlfc (9225)
Penn (9780)

The Subsurface Library
P. O. Box 2528
Midland, Texas

COUNTY LEA, N.M. FIELD SAUNDERS (PENN)

OPR SOLAR OIL COMPANY

E STIPP STATE WELL NO. 1

C Sec 9, T-15-S, R-33-E (F)

1980 FNL & FWL of Sec

UNIQUE NO. 30-025-23142

MAPS CO-ORD

F. R. 5-15-69 OBJ 10,100' RT SPUD 5-12-69

CTR Sharp LAHEE CLASS ELEV D. F. 4207' L/S

LOGS SPLS GL

TD 10,100' Lm PBD 9586' ABD LOC. P & A

PAY ZONE	PROD INTERVAL	IP	BO	W	HRS	CHK	TEST BASIS
Penn.	9540-9576	P	27	192	24		

GOR	GTY	CP	TP	BHP	POT DATE	TREATMENT
1444	39				8-1-69	A/1500

CSG 13 3/8 - 370 - 350
8 5/8 - 4250 - 700
5 1/2 - 10,100 - 350

COUNTY LEA, N.M. FIELD SAUNDERS (PENN)

WELL: SOLAR #1 STIPP STATE ELEV 4207' DF

DATE	WELL RECORD REACHED T. D.	SPL (LOG) MARKERS
	TD 10,100' Lime PBD 9586'	Rust (1530)
	Perf 1 @ 9848, 9850, 9852, 9854, 9866,	Yates (2673)
	9868, 9876, 9878, 9898, 9902, 9904,	S.A. (4240)
	9910, 9917, 9942, 9944, 9957, 9958,	Tubb (7042)
	9960, 9980, 9985, 9994, 9996, 10022,	Abo (7795)
	10024, 10026. A/3000 (9942-10,026)	Hueco (9163)
	Swbd 100% wtr (9942-10,026); A/3000	Saunders Lm
	(9848-9917) Swbd 260 BF 24 hrs. cut 8%	(9834)
	oil (9848-9917) Swbd 34 BF 3 hrs. cut	
	8% oil (9848-10,026)	
	Perf 1 @ 9596, 9598, 9600, 9602, 9604,	
	9612, 9614, 9616, 9652, 9662, 9670, 9692,	
	9694, 9698, 9701, 9704, 9716, 9725, 9727,	
	9729. A/5000; Swbd 20 BF 9 hrs. 25% oil; Swbd dry	
	Perf 1 @ 9540, 9542, 9574, 9576. A/1500	
	Swbd 60 BF 7½ hrs. Pmpd 17 BO 211 BW 24 hrs.	
	(8-7-69)	

The Subsurface Library
P. O. Box 942
Midland, Texas

MALCO REFINERIES, Inc.
SCOUT REPORT

WEEKLY REPORT

Field: Saunders

Scout Dist. No. 5-A

COMPANY: Cities Service WELL NO. 1 FARM: State AC

County: Lea State: N.Mex.

Spud: _____ Comp: _____

Contractor: _____ Method: _____

El. D. F. 4206 Gr. _____

FORMATIONS: Penetrated

TA 1260 Sh

TX

RX

TYL

TSR

TQ

TGB

TSA 4900

TMV

TCF 6350

T. Tubbs 7050

T. Abo 7780

T. Penn 9444

T. Penn.

T. Miss.

T. Dev.

T. Mont.

T. Simp.

T. McKee

T. Ell.

T. Pre-Cam.

S/

S/

S/

S/

S/

S/

Grav. 41.5 GOR .70

FCP SICP

FTP 240 SITP

Sec. 9 Twp. 15 S Rge. 33 E

Loc. 660' FN 660' FE FS FW

9760' Test

Location

5-1/2 TD 4275 L mus. Cg.

3-10 TD [illegible] Lo[illegible]

5-27 TD 5029 L mus.

[illegible]

6-1 [illegible]

6-15 [illegible] Lush

6-25 [illegible] Lush

7-1 [illegible]

7-9 [illegible]

7-16 [illegible]

[illegible]

7-30 TD 10050 [illegible]

[illegible] 9992 [illegible] G 3000

[illegible] 9991 10028 [illegible] G 5000 Gal

47000 [illegible] 3/2 [illegible]

[illegible] 2950

[illegible] 10050 [illegible] 150M

The Subsurface Library
P. O. Box 942
Midland, Texas

CASING & CEMENT

Size	Depth	Sax
1 8	[illegible]	[illegible]
5 1/2	10050	250

COMPLETION RECORD

T. D. 10050 PB

T. P. 9910

IP/F 418 Bo 24 hrs

Tubing 2 Ch. 1/2 @ 10024

Packer

Perf.

SHOOTING RECORD

Qts. _____ From _____

Qts. _____ From _____

Qts. _____ From _____

Results _____

ACIDIZING RECORD

Gal. _____ Zone _____

Gal. _____ Zone _____

Gal. _____ Zone _____

Results _____

MWJ.
Cities Serv. State
#1AC

Lea 9-15-33

Cities Service

#1 State AG

LOG

[illegible] 28 hrs 9915-22

" 16 hrs 9922-92

" 12 hrs 9904-93

" 8 " 9914-10001 Cut up 1000 9922-10001

" Cut off 1000 9922-9923

Swab 70 B fluid [illegible] Thru 802 SW

F.L. 3213.0 + 205 SW 19 hrs.

Swab 267 SW 17 hrs.

[illegible] T.D. 10076 [illegible]

[illegible]

The Subsurface Library
P. O. Box 948
Midland, Texas

COUNTY LEA, N.M. FIELD SAUNDERS (PERMO PENN)

PR SOLAR OIL COMPANY

: SAUNDERS STATE WELL NO. 1-Y

/C Sec 9, T-15-S, R-33-E (P)

990 FSL & FEL of Section

UNIQUE NO. 30-025-23141

MAPS CO-ORD

F. R. 5-15-69 OBJ 10,100' RT SPUD 5-8-69

CTR Mexas Drlg. LAHEE CLASS ELEV D. F. 4198' L/S

LOGS SPLS GL

TD 10,120' PBD 10,067' ABD LOC. P & A

PAY ZONE	PROD INTERVAL	IP	BO	W	HRS	CHK	TEST BASIS
Permo Penn	9574-10018	P	5	114	24		

GOR	GTY	CP	TP	BHP	POT DATE	TREATMENT
3100	40				9-14-69	A/16,500

CSG 13 3/8 - 325 - 400
8 5/8 - 4280 - 600
5 1/2 - 10120 - 400

UNTY LEA, N.M. FIELD SAUNDERS (PERMO PENN)

WELL: SOLAR #1-Y SAUNDERS STATE ELEV 4198' DF

DATE	WELL RECORD REACHED T. D.	SPL (LOG) MARKERS
	TD 10,120' PBD 10,067'	Anhy (1525)
	Perf 9985-10018 (overall)	B/Salt (2558)
	Perf 9858-9934 (overall)	Yates (2678)
	A/5000	Queen (3486)
	Swbd 18 BF 1½ hrs. good show gas 15%	SA (4158)
	oil	Glor (5780)
	Perf 9569-9602; 9639-9724; A/7000; Swbd	Clfk (6330)
	332 BF 24 hrs. cut 1% oil; sqzd pfs	Tubb (7055)
	9569-9724 w/150 sx. Swbd 5 BF 20% oil	Abo (7725)
	(9858-10018)	Wlfc Sh (9185)
	Perf 9574-9702 (overall) A/3000 Swbd	Penn (9440)
	30% oil	
	Perf 9858-9934 (oa) 9985-10018; A/8000	
	S/236 BF 15-20% oil, S/34 BF 63% oil 14%	
	BS 23% Wtr 3 hrs. Pmpd 8 BO 74 BW 24 hrs	
	Pmpd 8 BO 80 BW 24 hrs. Pmpd 8 BO 92 BW	
	24 hrs. Pmpd 5 BO 123 BW 24 hrs. Pmpd	
	6 BO 118 BW 24 hrs.	
	(10-9-69)	

The Subsurface Library
P. O. Box 942
Midland, Texas

Yates Pet-Saunders St
#1-Y

Sec. 9

MALCO REFINERIES, Inc.
SCOUT REPORT

Field Saunders

Scout Dist. No. 5-A

COMPANY Cities Service Oil Co. WELL NO. #1 State A FARM State AO

County Lea State N. M.

Spud 12-3-52 Comp. 3-5-53

Contractor Method

EL. D. F. 4200 Gr.

FORMATIONS: Penetrated

TA 1523	
TX	
BX	
TYL 2660	
TSR	
TQ	
TGb	
TSA 4295	-95
TG1	
TCP	
T Tubbs	
T Abo 7610	-3610
T Hueco 9223	-5023
T. Penn.	
T. Miss.	
T. Dev.	
T. Mont.	
T. Simp.	
T. McKee	
T. Ell.	
T. Pre-Cam.	

S/
S/
S/
S/
S/
S/

Grav. 36.6 GOR

FCP SICP

FTP SITP

Form No. 15—SM-10-52-HP

Sec. 9 Twp. 15S Rge. 33E

Loc. FN 660' FE 660' FS FW

10,200' Test.

[illegible]

CASING & CEMENT

Size	Depth	Sax
13 3/8	320	300
[illegible]	4296	[illegible]
5½	10,020	650

COMPLETION RECORD

T. D. 10,020' PB

T. P. 9983

IPP 41 B.O. + 161 BWPD.

Tubing 2 Ch. @ 9025

Packer

Perf.

SHOOTING RECORD

Qts. From

Qts. From

Qts. From

Results

ACIDIZING RECORD

Gal. 6500 Zone

Gal. Zone

Gal. Zone

Results

Cities Serv. Saunders #1

The Subsurface Library
P. O. Box 942
Midland, Texas

STATE OF NEW MEXICO
ENERGY AND MINERALS DEPARTMENT

OIL CONSERVATION DIVISION
POST OFFICE BOX 2088
STATE LAND OFFICE BUILDING
SANTA FE, NEW MEXICO 87501

FORM C-108
Revised 7-1-81

Set For Hearing 5/23/86

APPLICATION FOR AUTHORIZATION TO INJECT

I. Purpose: ☐ Secondary Recovery ☐ Pressure Maintenance ☒ Disposal ☐ Storage
Application qualifies for administrative approval? ☒ yes ☐ no

Case 8926

II. Operator: SAGE ENERGY COMPANY

Address: P. O. Drawer 3068, Midland, Texas 79702

Contact party: Jay H. Hardy/Danny Roberts Phone: 915 683 5271

III. Well data: Complete the data required on the reverse side of this form for each well proposed for injection. Additional sheets may be attached if necessary.

IV. Is this an expansion of an existing project? ☐ yes ☒ no
If yes, give the Division order number authorizing the project _____.

V. Attach a map that identifies all wells and leases within two miles of any proposed injection well with a one-half mile radius circle drawn around each proposed injection well. This circle identifies the well's area of review.

* VI. Attach a tabulation of data on all wells of public record within the area of review which penetrate the proposed injection zone. Such data shall include a description of each well's type, construction, date drilled, location, depth, record of completion, and a schematic of any plugged well illustrating all plugging detail.

VII. Attach data on the proposed operation, including:

1. Proposed average and maximum daily rate and volume of fluids to be injected;
2. Whether the system is open or closed;
3. Proposed average and maximum injection pressure;
4. Sources and an appropriate analysis of injection fluid and compatibility with the receiving formation if other than reinjected produced water; and
5. If injection is for disposal purposes into a zone not productive of oil or gas at or within one mile of the proposed well, attach a chemical analysis of the disposal zone formation water (may be measured or inferred from existing literature, studies, nearby wells, etc.).

*VIII. Attach appropriate geological data on the injection zone including appropriate lithologic detail, geological name, thickness, and depth. Give the geologic name, and depth to bottom of all underground sources of drinking water (aquifers containing waters with total dissolved solids concentrations of 10,000 mg/l or less) overlying the proposed injection zone as well as any such source known to be immediately underlying the injection interval.

IX. Describe the proposed stimulation program, if any.

* X. Attach appropriate logging and test data on the well. (If well logs have been filed with the Division they need not be resubmitted.)

* XI. Attach a chemical analysis of fresh water from two or more fresh water wells (if available and producing) within one mile of any injection or disposal well showing location of wells and dates samples were taken.

XII. Applicants for disposal wells must make an affirmative statement that they have examined available geologic and engineering data and find no evidence of open faults or any other hydrologic connection between the disposal zone and any underground source of drinking water.

XIII. Applicants must complete the "Proof of Notice" section on the reverse side of this form.

XIV. Certification

I hereby certify that the information submitted with this application is true and correct to the best of my knowledge and belief.

Name: Jay H. Hardy Title Vice President - Engineering

Signature: Jay H. Hardy Date: April 29, 1986

* If the information required under Sections VI, VIII, X, and XI above has been previously submitted, it need not be duplicated and resubmitted. Please show the date and circumstance of the earlier submittal. NA

DISTRIBUTION: Original and one copy to Santa Fe with one copy to the appropriate Division district office.

III. WELL DATA

A. The following well data must be submitted for each injection well covered by this application. The data must be both in tabular and schematic form and shall include:

(1) Lease name; Well No.; location by Section, Township, and Range; and footage location within the section.

(2) Each casing string used with its size, setting depth, sacks of cement used, hole size, top of cement, and how such top was determined.

(3) A description of the tubing to be used including its size, lining material, and setting depth.

(4) The name, model, and setting depth of the packer used or a description of any other seal system or assembly used.

Division District offices have supplies of Well Data Sheets which may be used or which may be used as models for this purpose. Applicants for several identical wells may submit a "typical data sheet" rather than submitting the data for each well.

B. The following must be submitted for each injection well covered by this application. All items must be addressed for the initial well. Responses for additional wells need be shown only when different. Information shown on schematics need not be repeated.

(1) The name of the injection formation and, if applicable, the field or pool name.

(2) The injection interval and whether it is perforated or open-hole.

(3) State if the well was drilled for injection or, if not, the original purpose of the well.

(4) Give the depths of any other perforated intervals and detail on the sacks of cement or bridge plugs used to seal off such perforations.

(5) Give the depth to and name of the next higher and next lower oil or gas zone in the area of the well, if any.

XIV. PROOF OF NOTICE

All applicants must furnish proof that a copy of the application has been furnished, by certified or registered mail, to the owner of the surface of the land on which the well is to be located and to each leasehold operator within one-half mile of the well location.

Where an application is subject to administrative approval, a proof of publication must be submitted. Such proof shall consist of a copy of the legal advertisement which was published in the county in which the well is located. The contents of such advertisement must include:

(1) The name, address, phone number, and contact party for the applicant;

(2) the intended purpose of the injection well; with the exact location of single wells or the section, township, and range location of multiple wells:

(3) the formation name and depth with expected maximum injection rates and pressures; and

(4) a notation that interested parties must file objections or requests for hearing with the Oil Conservation Division, P. O. Box 2088, Santa Fe, New Mexico 87501 within 15 days.

NO ACTION WILL BE TAKEN ON THE APPLICATION UNTIL PROPER PROOF OF NOTICE HAS BEEN SUBMITTED.

NOTICE: Surface owners or offset operators must file any objections or requests for hearing of administrative applications within 15 days from the date this application was mailed to them.

DATA ON THE PROPOSED OPERATIONS

VII.

1. The average and meximum daily rate and volume of fluids to be injected will be at the rate of 100 BWPD
2. The system is open.
3. Water to be disposed of on vacuum.
4. Water analysis attached.
5. Not applicable.

VIII.

The injection zone is:

9565' to 9890', top of Saunders 9778', thickness of Saunders 242', and top of Wolfcamp 9254', thickness of Wolfcamp 524'.

IX. No stimulation program needed.

X. Logs and test data on file with the division.

XI. Not applicable.

XII. I have no knowledge of open faults or any other hydrologic connection between the disposal zone and any underground source of drinking water.

INJECTION WELL DATA SHEET

SIDE 1

SAGE ENERGY COMPANY		Lowe State		
OPERATOR		LEASE		
No. 1	1980' FSL and 660' FSL	Section 10,	T-15-S	R-33-E
WELL NO.	FOOTAGE LOCATION	SECTION	TOWNSHIP	RANGE

Lea County, New Mexico

Schematic

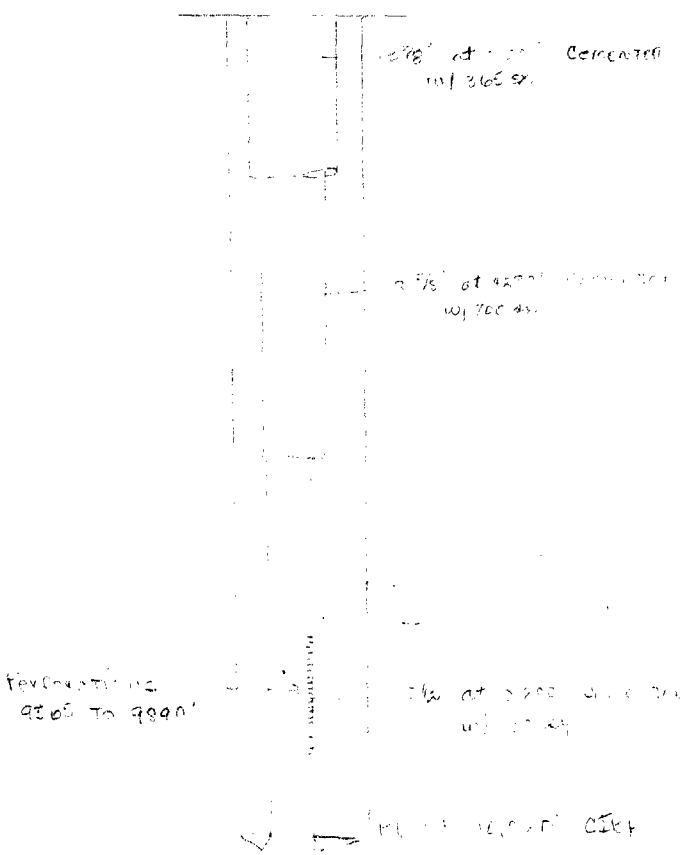

Tabular Data

Surface Casing

Size 13 3/8" " Cemented with 365 sx.

TOC Circulated feet determined by calculations

Hole size 17½"

Intermediate Casing

Size 8 5/8" " Cemented with 700 sx.

TOC 3700 feet determined by calculations

Hole size 9 7/8"

Long string

Size 5½" " Cemented with 500 sx.

TOC 9500 feet determined by calculations

Hole size 7 7/8"

Total depth 10,200, PBTD 10,020

Injection interval

9565 feet to 9890 feet

(perforated or open-hole, indicate which)

Tubing size 2 7/8" lined with Plastic Coating (material) set in a Baker- Lok-Set (brand and model) packer at 9500 feet

(or describe any other casing-tubing seal).

Other Data

1. Name of the injection formation Saunders (Penn)

2. Name of Field or Pool (if applicable) Saunders (Penn)

3. Is this a new well drilled for injection? /_/ Yes /X/ No

   If no, for what purpose was the well originally drilled? Oil and Gas exploration.

4. Has the well ever been perforated in any other zone(s)? List all such perforated intervals and give plugging detail (sacks of cement or bridge plug(s) used)

   CIBP at 10,020 with 1 sx cement, perforated with 17 holes from 9890 to 9565.

5. Give the depth to and name of any overlying and/or underlying oil or gas zones (pools) in this area.

   None

NEW MEXICO STATE LAND OFFICE

APPRAISEMENT OF GRAZING AND AGRICULTURAL LANDS

TO THE COMMISSIONER OF PUBLIC LANDS, SANTA FE, N. M.

Sir:

I am well acquainted with the character of state owned lands as described on the back of this form, located in Eddy County, New Mexico, together with statement of the natural character thereof and the condition thereof:

CHARACTER OF LAND

The land is best adapted for grazing or agriculture grazing. There are natural streams, springs, ponds, and water holes as follows: No

There are irrigating ditches on land as follows: No

Give depth of well nearest this land, and state location by section, township and range NA Sec. 10, T-15-S, R-33-E

On said land there are None acres natural hay land; None acres agricultural land, without irrigation, None acres of irrigable land, None acres in actual cultivation, and None acres timber land. State kind of timber, quality and present condition None

Is there mineral or coal on the land? No. If so, state location, extent and kind of mineral

The attached plat represents the location of said lands, the location of streams, springs, water sources and irrigation ditches, as well as the agricultural, hay and grazing land, if any, also the improvements, and said map is made a part of this affidavit.

IMPROVEMENTS

House, give size and type of construction	None	Value $
Barns, stables and corrals	None	Value $
Well, give depth and description	None	Value $
Windmill	None	Value $
Fences, give amount and kind	None	Value $
Other improvements	None	Value $
	Total Value of improvements	$

The first improvements were placed upon this section by _____ of _____ State of _____

After having personally inspected the within described tract of land, I HEREBY APPRAISE THE SAME at and state the ACTUAL CASH VALUE of same to be $ 50.00 per acre, and certify that I am not interested in said land or leasing or sale thereof.

Signed Danny Roberts

Danny Roberts

P.O. SAGE ENERGY COMPANY. P. O. Drawer 3068
Midland, Texas 79702

Subscribed and sworn to before me this 25th day of April, 19 86

X F. Holzgraf F. Holzgraf
Notary Public

My Commission Expires: 10-31-88

NOTE: The Laws of New Mexico require that all statements in appraisements must be made from personal knowledge, and not upon information and belief; save only those with reference to the actual value of the land appraised. This appraisement must be sworn to before a Notary Public or other officer authorized to administer oaths.

S-44 (REV-1985)

(OVER)

NEW MEXICO OIL CONSERVATION COMMISSION

WELL LOCATION AND ACREAGE DEDICATION PLAT

Form C-102
Supersedes C-128
Effective 1-1-65

All distances must be from the outer boundaries of the Section.

Operator	Lease	Well No.
SOLAR OIL COMPANY	LOWE STATE	1

Unit Letter	Section	Township	Range	County
L	10	15 SOUTH	33 EAST	LEA

Actual Footage Location of Well: 1980 feet from the SOUTH line and 660 feet from the WEST line

Ground Level Elev.	Producing Formation	Pool	Dedicated Acreage:
4184.7			Acres

1. Outline the acreage dedicated to the subject well by colored pencil or hachure marks on the plat below.

2. If more than one lease is dedicated to the well, outline each and identify the ownership thereof (both as to working interest and royalty).

3. If more than one lease of different ownership is dedicated to the well, have the interests of all owners been consolidated by communitization, unitization, force-pooling. etc?

☐ Yes ☐ No If answer is "yes," type of consolidation _____

If answer is "no," list the owners and tract descriptions which have actually been consolidated. (Use reverse side of this form if necessary.) _____

No allowable will be assigned to the well until all interests have been consolidated (by communitization, unitization, forced-pooling, or otherwise) or until a non-standard unit, eliminating such interests, has been approved by the Commission.

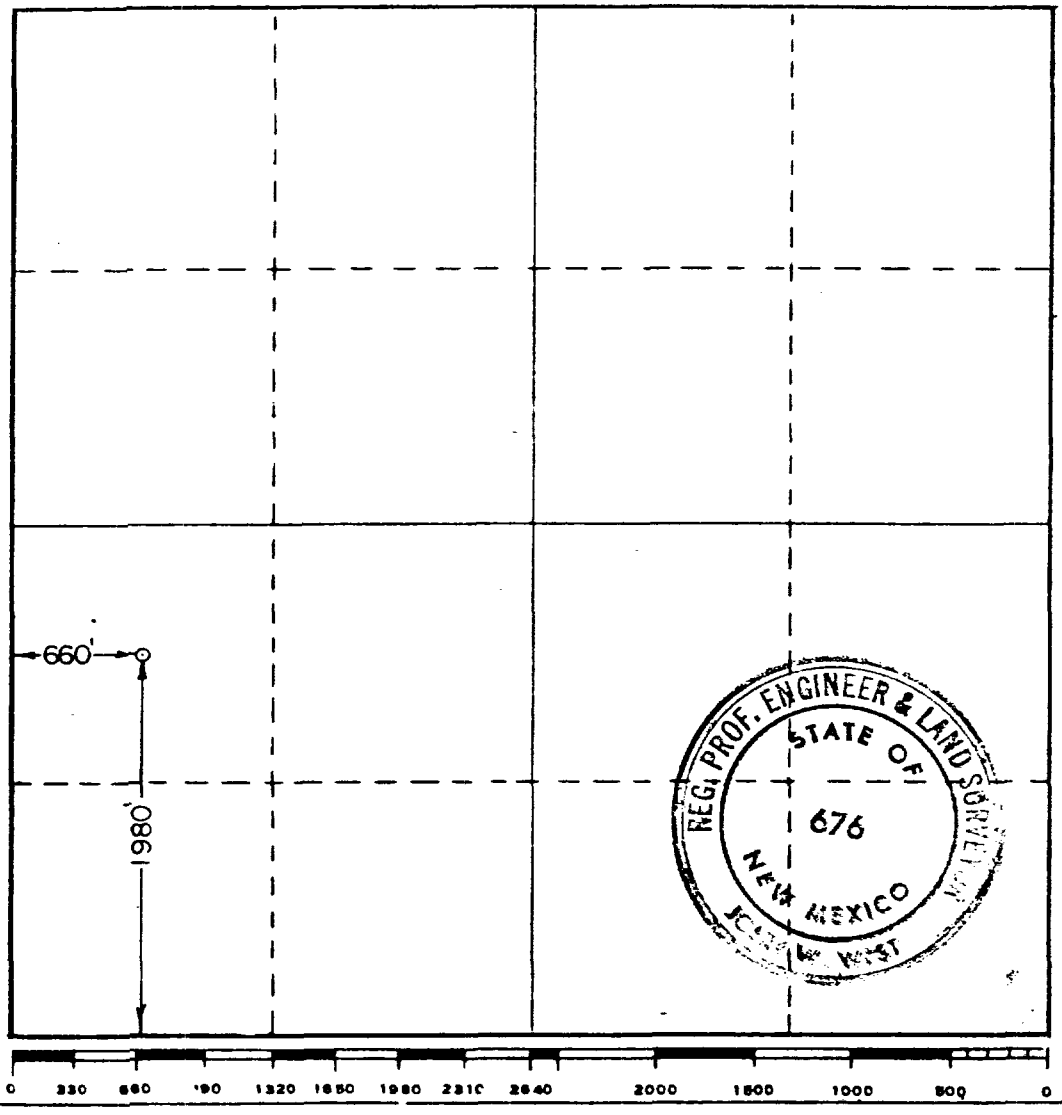

CERTIFICATION

I hereby certify that the information contained herein is true and complete to the best of my knowledge and belief.

Name

Position

Company

Date

I hereby certify that the well location shown on this plat was plotted from field notes of actual surveys made by me or under my supervision, and that the same is true and correct to the best of my knowledge and belief.

Date Surveyed
MARCH 3, 1969

Registered Professional Engineer and/or Land Surveyor

John W West

Certificate No. 676

1342 A

HALLIBURTON DIVISION LABORATORY

HALLIBURTON SERVICES
MIDLAND DIVISION
HOBBS, NEW MEXICO 88240

LABORATORY WATER ANALYSIS

No. W86- 148

To SAGE ENERGY
Drawer 3068
Midland, Texas 79702

Date 4/17/86

This report is the property of Halliburton Company and neither it nor any part thereof nor a copy thereof is to be published or disclosed without first securing the express written approval of laboratory management; it may however, be used in the course of regular business operations by any person or concern and employees thereof receiving such report from Halliburton Company.

Submitted by _____ Date Rec. 4/17/86

Well No. _____ Depth _____ Formation _____

County _____ Field _____ Source _____

	West of Lowe #1	SE of Lowe #1	
Resistivity	7.86 @ 70°F	9.71 @ 70°F	
Specific Gravity	1.000	1.000	
pH	6.8	7.5	
Calcium (Ca)	110	190	*MPL
Magnesium (Mg)	Nil	Nil	
Chlorides (Cl)	550	550	
Sulfates (SO_4)	321	280	
Bicarbonates (HCO_3)	348	204	
Soluble Iron (Fe)	Nil	Nil	
T.D.S.	1329	1224	

Remarks:

*Milligrams per liter

Respectfully submitted,

Analyst: Jon Thayer

HALLIBURTON COMPANY

CC:

By _____
CHEMIST

NOTICE

THIS REPORT IS LIMITED TO THE DESCRIBED SAMPLE TESTED. ANY USER OF THIS REPORT AGREES THAT HALLIBURTON SHALL NOT BE LIABLE FOR ANY LOSS OR DAMAGE, WHETHER IT BE TO ACT OR OMISSION, RESULTING FROM SUCH REPORT OR ITS USE.

Affidavit of Publication

STATE OF NEW MEXICO)
) ss.
COUNTY OF LEA)

Joyce Clemens being first duly sworn on oath deposes and says that he is Adv. Director of THE LOVINGTON DAILY LEADER, a daily newspaper of general paid circulation published in the English language at Lovington, Lea County, New Mexico; that said newspaper has been so published in such county continuously and uninterruptedly for a period in excess of Twenty-six (26) consecutive weeks next prior to the first publication of the notice hereto attached as hereinafter shown; and that said newspaper is in all things duly qualified to publish legal notices within the meaning of Chapter 167 of the 1937 Session Laws of the State of New Mexico.

That the notice which is hereto attached, entitled

Legal Notice

and numbered ..... in the ..... Court of Lea County, New Mexico, was published in a regular and entire issue of THE LOVINGTON DAILY LEADER and not in any supplement thereof, once each week on the same day of the week, for one (1) consecutive weeks, beginning with the issue of April 11, 1986 and ending with the issue of ....., 19....

And that the cost of publishing said notice is the sum of $6.03 which sum has been (Paid) ~~XXXXXXX~~ as Court Costs

Joyce Clemens

Subscribed and sworn to before me this 23rd day of April, 1986

Mrs. Jean Seaver

Notary Public, Lea County, New Mexico

My Commission Expires Sept. 28, 1986

LEGAL NOTICE

"Sage [illegible] P.O. Drawer [illegible] 79032 has applied [illegible] No. 1 well [illegible] Scotch line and [illegible] of Unit [illegible] 10, Township [illegible] Lea County, [illegible] directional [illegible] to [illegible] Section [illegible] to [illegible] 500 [illegible] parties [illegible] a hearing with the [illegible] Commission, P.O. Box [illegible] Santa Fe, New Mexico, prior [illegible] 15 days of todays date."

[illegible] COMPANY

Published in the Lovington Daily Leader April 11, 1986.

NEW MEXICO STATE LAND OFFICE

APPRAISEMENT OF GRAZING AND AGRICULTURAL LANDS

TO THE COMMISSIONER OF PUBLIC LANDS, SANTA FE, N. M.

Sir:

I am well acquainted with the character of state owned lands as described on the back of this form, located in Eddy County, New Mexico, together with statement of the natural character thereof and the condition thereof:

CHARACTER OF LAND

The land is best adapted for grazing or agriculture grazing. There are natural streams, springs, ponds, and water holes as follows: No

There are irrigating ditches on land as follows: No

Give depth of well nearest this land, and state location by section, township and range NA

Sec. 10, T-15-S, R-33-E

On said land there are None acres natural hay land; None acres agricultural land, without irrigation, None acres of irrigable land, None acres in actual cultivation, and None acres timber land. State kind of timber, quality and present condition None

Is there mineral or coal on the land? No. If so, state location, extent and kind of mineral

The attached plat represents the location of said lands, the location of streams, springs, water sources and irrigation ditches, as well as the agricultural, hay and grazing land, if any, also the improvements, and said map is made a part of this affidavit.

IMPROVEMENTS

House, give size and type of construction	None	Value $
Barns, stables and corrals	None	Value $
Well, give depth and description	None	Value $
Windmill	None	Value $
Fences, give amount and kind	None	Value $
Other improvements	None	Value $
Total Value of improvements		$

The first improvements were placed upon this section by _____ of _____ State of _____

After having personally inspected the within described tract of land, I HEREBY APPRAISE THE SAME at and state the ACTUAL CASH VALUE of same to be $ 50.00 per acre, and certify that I am not interested in said land or leasing or sale thereof.

Signed Danny Roberts

Danny Roberts

P.O. SAGE ENERGY COMPANY. P. O. Drawer 3068

Midland, Texas 79702

Subscribed and sworn to before me this 25th day of April, 19 86

X F. Holzgraf F. Holzgraf

Notary Public

My Commission Expires: 10-31-88

NOTE: The Laws of New Mexico require that all statements in appraisements must be made from personal knowledge, and not upon information and belief; save only those with reference to the actual value of the land appraised. This appraisement must be sworn to before a Notary Public or other officer authorized to administer oaths.

S-44 (REV-1985)

(OVER)

SUBDIVISION	SEC.	TWP.	RANGE	ACRES

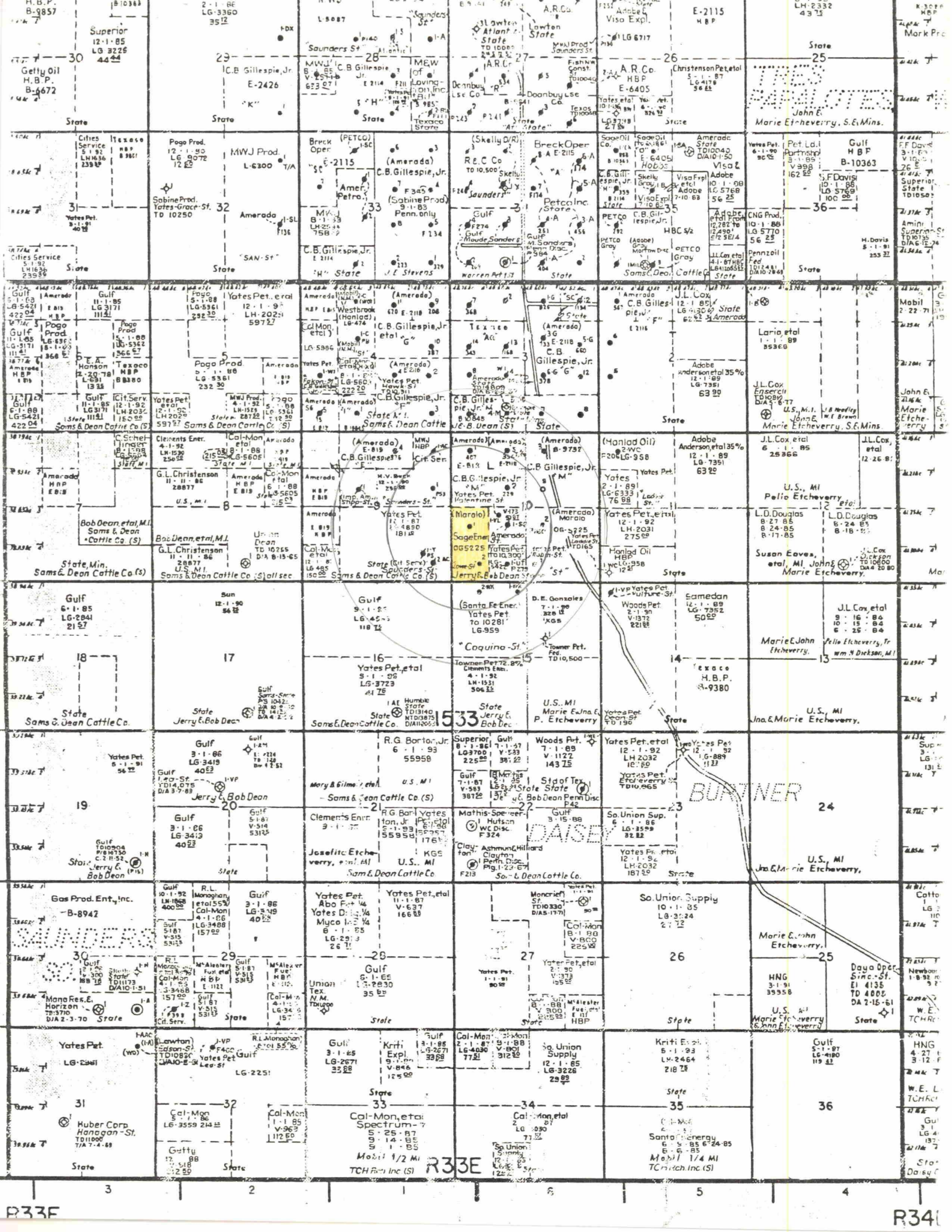
PANHANDLE
BURTNER
DAISEY
SUNDERS
R33E
R34E

INJECTION WELL DATA SHEET

SIDE 1

OPERATOR	LEASE			
AMERADA PETROLEUM CORPORATION	State S "N" Unit			

WELL NO.	FOOTAGE LOCATION	SECTION	TOWNSHIP	RANGE
14	2111' FNL and 660' FSL of Section	Sec. 3,	T-15-S,	R-33-E Lea County, New Mexico

Schematic -WIW-

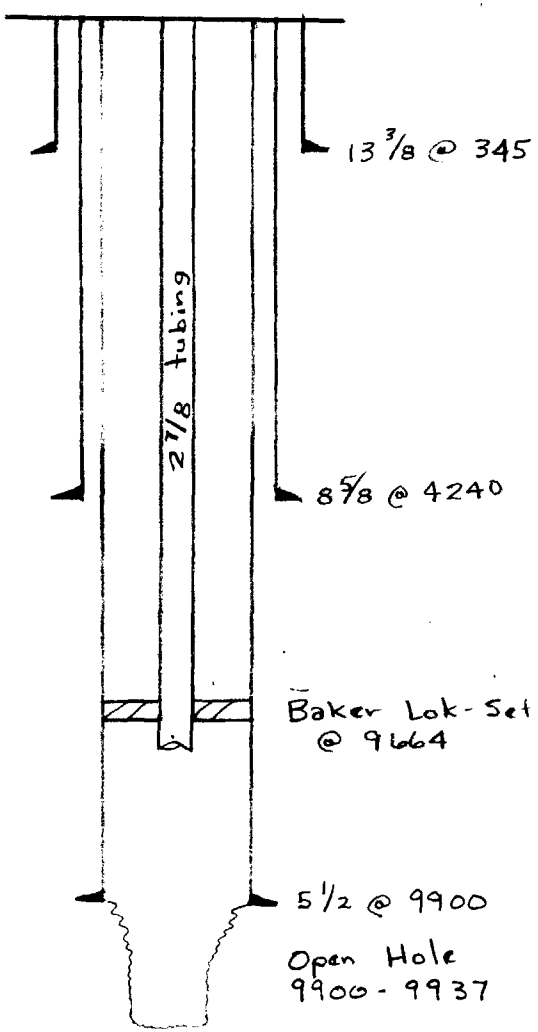

Tabular Data

Surface Casing

Size 13 3/8 " Cemented with 345 sx.

TOC surface feet determined by visual

Hole size 17 1/2

Intermediate Casing

Size 8 5/8 " Cemented with 500 sx.

TOC ? feet determined by ?

Hole size 12 1/4

Long string

Size 5 1/2 " Cemented with 400 sx.

TOC ? feet determined by ?

Hole size 7 7/8

Total depth _____

Open Hole Size 4 1/8

Injection interval

_____ feet to _____ feet

(perforated or open-hole, indicate which)

Tubing size _____ lined with _____ set in a
(material)

_____ packer at _____ feet
(brand and model)

(or describe any other casing-tubing seal).

Other Data

1. Name of the injection formation _____

2. Name of Field or Pool (if applicable) _____

3. Is this a new well drilled for injection? ☐ Yes ☐ No

   If no, for what purpose was the well originally drilled? _____

   _____

4. Has the well ever been perforated in any other zone(s)? List all such perforated intervals and give plugging detail (sacks of cement or bridge plug(s) used) _____

   _____

   _____

5. Give the depth to and name of any overlying and/or underlying oil or gas zones (pools) in this area. _____

   _____

   _____

COUNTY LEA, N.M. FIELD SAUNDERS (PENN)

OPR AMERADA PETROLEUM CORPORATION

LSE STATE S "N" UNIT WELL NO. 14

LOC Sec 3, T-15-S, R-33-E, 2221 FNL 660 FWL of Sec

OWWO-FRC

MAPS CO-ORD

F. R. 5-12-67 OBJ METHOD SPUD 4-16-67

CTR C. R. ELEV D. F. 4208

LOGS SPLS GL

OTD 9990 li PBD 9937 ABD LOC. P & A

PAY ZONE	TOP PAY	PRODUCING INTERVAL	IP	BO	W	BS&W	HRS	TEST BASIS
		WATER INJECTION WELL (OH)						

CHOKE	GOR	GTY	CP	TP	POT DATE	TREATMENT
					4-20-67	

CSG-TBG-PKR RECORD REACHED T. D.

13 3/8 - 345 - 350 5 1/2 - 9900 - 400

8 5/8 - 4240 - 500

COUNTY LEA, N.M. FIELD SAUNDERS (PENN)

WELL: AMERADA #14 STATE S "N" UNIT ELEV 4208 DF

DATE	WELL RECORD	SPL (LOG) MARKERS
	OTD 9990 li PBD 9937	Yates (2651)
	WIW 4-20-67	SA (4210)
	A/1000 OH 9900-37	Glor (5700)
		Tubbs (7500)
	(5-12-67)	Abo (7800)
		WC (9120)

The Subsurface Library
P. O. Box 942
Midland, Texas

NO. OF COPIES RECEIVED		
DISTRIBUTION		
SANTA FE		
FILE		
U.S.G.S.		
LAND OFFICE		
OPERATOR		

NEW MEXICO OIL CONSERVATION COMMISSION

Form C-103
Supersedes Old C-102 and C-103
Effective 1-1-65

5a. Indicate Type of Lease
State [X] Fee [ ]

5. State Oil & Gas Lease No.
B-9380

SUNDRY NOTICES AND REPORTS ON WELLS

(DO NOT USE THIS FORM FOR PROPOSALS TO DRILL OR TO DEEPEN OR PLUG BACK TO A DIFFERENT RESERVOIR. USE "APPLICATION FOR PERMIT -" (FORM C-101) FOR SUCH PROPOSALS.)

1. OIL WELL [X] GAS WELL [ ] OTHER-

7. Unit Agreement Name
--

2. Name of Operator
TEXACO Inc.

8. Farm or Lease Name
New Mexico "AO" Stat

3. Address of Operator
P. O. Box 728, Hobbs, New Mexico

9. Well No.
2

4. Location of Well
UNIT LETTER E, 2271 FEET FROM THE North LINE AND 661 FEET FROM THE West LINE, SECTION 3 TOWNSHIP 15-S RANGE 33-E NMPM.

10. Field and Pool, or Wildcat
Saunders Permo Penn

15. Elevation *(Show whether DF, RT, GR, etc.)*

12. County
Lea

16. Check Appropriate Box To Indicate Nature of Notice, Report or Other Data

NOTICE OF INTENTION TO:		SUBSEQUENT REPORT OF:	
PERFORM REMEDIAL WORK [ ]	PLUG AND ABANDON [ ]	REMEDIAL WORK [ ]	ALTERING CASING [ ]
TEMPORARILY ABANDON [ ]		COMMENCE DRILLING OPNS. [ ]	PLUG AND ABANDONMENT [X]
PULL OR ALTER CASING [ ]	CHANGE PLANS [ ]	CASING TEST AND CEMENT JOB [ ]	
OTHER [ ]		OTHER [ ]	

17. Describe Proposed or Completed Operations *(Clearly state all pertinent details, and give pertinent dates, including estimated date of starting any proposed work)* SEE RULE 1103.

1. Recover 4426' 5 1/2" casing.
2. Set CIBP at 9706' w/3 sx cement plug on top.
3. Set 25 sx cement plug at 4423'.
4. Set 25 sx cement plug at 4290'.
5. Set 10 sx cement plug at surface.
6. Install 4" dry hole marker extending 4' above ground level. Clean location.

18. I hereby certify that the information above is true and complete to the best of my knowledge and belief.

SIGNED [signature] TITLE Assistant District Superintendent DATE 12-3-71

APPROVED BY Nathan E. Clegg TITLE [illegible] DATE [illegible] 197

CONDITIONS OF APPROVAL, IF ANY:

INJECTION WELL DATA SHEET

SIDE 1

Imperial-American Management Co./ SOLAR OIL COMPANY	Sanuders State No. 1			
OPERATOR	LEASE			
No. 1	660' FSL and 660' FEL of Sec. 9, T-15-S, R-33-E		Lea County, New Mexico	
WELL NO.	FOOTAGE LOCATION	SECTION	TOWNSHIP	RANGE

Schematic

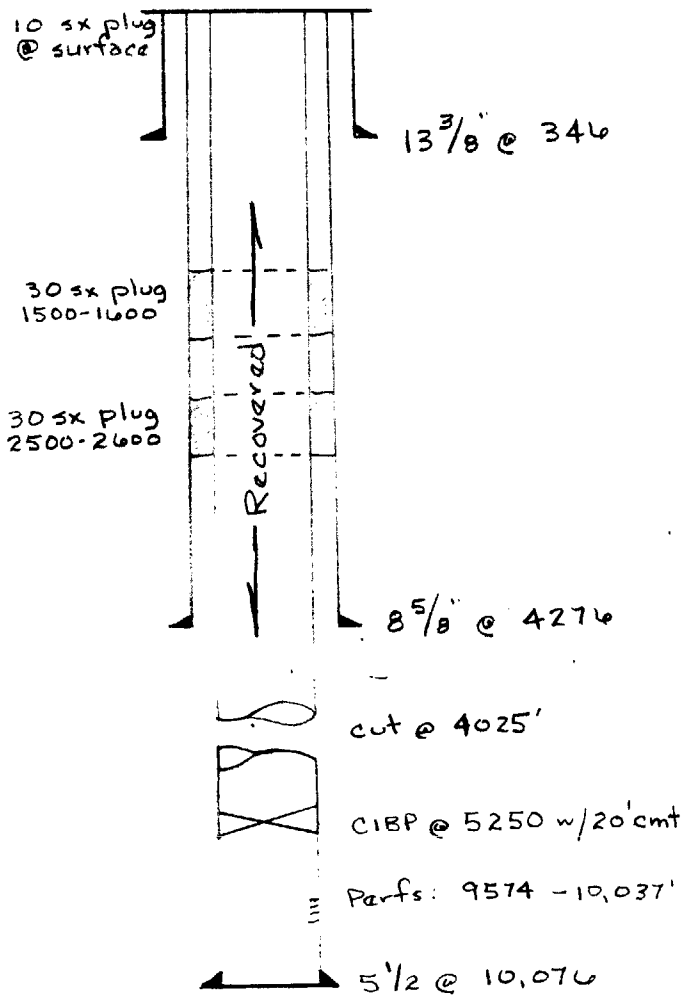

Tabular Data

Surface Casing

Size 13 3/8 " Cemented with 346 sx.

TOC surface feet determined by visual

Hole size 17 1/4"

Intermediate Casing

Size 8 5/8 " Cemented with 2335 sx.

TOC ? feet determined by ?

Hole size 11"

Long string

Size 5 1/2 " Cemented with 2[illegible] sx.

TOC ? feet determined by ?

Hole size 7 7/8

Total depth 10,076

Injection Interval

_____ feet to _____ feet
(perforated or open-hole, indicate which)

Tubing size _____ lined with _____ set in a
(material)

_____ packer at _____ feet
(brand and model)

(or describe any other casing-tubing seal).

Other Data

1. Name of the injection formation _____

2. Name of Field or Pool (if applicable) _____

3. Is this a new well drilled for injection? /_/ Yes /_/ No

   If no, for what purpose was the well originally drilled? _____

   _____

4. Has the well ever been perforated in any other zone(s)? List all such perforated intervals and give plugging detail (sacks of cement or bridge plug(s) used) _____

   _____

   _____

5. Give the depth to and name of any overlying and/or underlying oil or gas zones (pools) in this area. _____

   _____

   _____

COUNTY LEA, N. MEX. FIELD EAST SAUNDERS (PENN)

OPR SOLAR OIL COMPANY

E SAUNDERS STATE WELL NO. 1

OC Sec 9, T-15-S, R-33-E (P)
660 FSL & FEL of Sec or 4620 FNL & 660 FEL of Sec
FRC-OWWO-Orig. Cities Serv. #1 State "AG"

UNIQUE NO. 30-025-01232

MAPS CO-ORD

F. R. 6-26-69 OBJ Re SPUD 2-7-69

CTR LAHEE CLASS ELEV D. F. 4200' L/S

LOGS SPLS GL

TD 10,078' PBD ABD LOC. P & A 5-16-69

PAY ZONE	PROD INTERVAL	IP	BO	W	HRS	CHK	TEST BASIS
	PLUGGED AND ABANDONED						

GOR	GTY	CP	TP	BHP	POT DATE	TREATMENT

CSG 13 3/8" @ 346 w/325
8 5/8" @ 4276 w/2335
5 1/2" @ 10076 w/200

Pulled from 5181, Reran 5 1/2 to 5181 tie to drlg csg. w/200 sx.

COUNTY LEA, N. MEX. FIELD EAST SAUNDERS (PENN)

WELL: SOLAR #1 SAUNDERS STATE ELEV 4200' DF L/S

DATE	WELL RECORD	REACHED T. D.	SPL (LOG) MARKERS
	OTD 10,078'	P&A 5-16-69	Anhy (1533)
	NEW WORK		Yates (2680)
	Perf. 15/9574-9698 (OA)		SA (4245)
	Perf. 14/9962-10037 (OA)		Fullerton (7072)
	Ac/4500 (2 stages)		Abo (7810)
	Leak in csg. 5520-5549. Sqz 5520-49 w/		Hueco (9223)
	150 sx. cleaned out cmt & drld outside		Saunders lm (9852)
	of csg. @ 5544, could not get back in-		
	side csg.		
	(6-26-69		

The Subsurface Library
P. O. Box 942
Midland, Texas

Yates-Saunders State ac
P&A

NO. OF COPIES RECEIVED		
DISTRIBUTION		
SANTA FE		
FILE		
U.S.G.S.		
LAND OFFICE		
OPERATOR		

[redacted]

NEW MEXICO OIL CONSERVATION COMMISSION

Form C-103
Supersedes Old C-102 and C-103
Effective 1-1-65

5a. Indicate Type of Lease: State [X] Fee [ ]

5. State Oil & Gas Lease No. K-5711

SUNDRY NOTICES AND REPORTS ON WELLS

(DO NOT USE THIS FORM FOR PROPOSALS TO DRILL OR TO DEEPEN OR PLUG BACK TO A DIFFERENT RESERVOIR. USE "APPLICATION FOR PERMIT —" (FORM C-101) FOR SUCH PROPOSALS.)

1. OIL WELL [X] GAS WELL [ ] OTHER-

7. Unit Agreement Name

2. Name of Operator: Imperial-American Management Co.

8. Farm or Lease Name: Saunders State

3. Address of Operator: 507 Midland Savings Bldg., Midland, Texas 79701

9. Well No. 1

4. Location of Well: UNIT LETTER P, 660 FEET FROM THE South LINE AND 660 FEET FROM THE East LINE, SECTION 9 TOWNSHIP 15-S RANGE 33-E NMPM.

10. Field and Pool, or Wildcat: Saunders Permo Penn

15. Elevation *(Show whether DF, RT, GR, etc.)* 4188' GR

12. County: Lea

16. Check Appropriate Box To Indicate Nature of Notice, Report or Other Data

NOTICE OF INTENTION TO:				SUBSEQUENT REPORT OF:			
PERFORM REMEDIAL WORK	[ ]	PLUG AND ABANDON	[ ]	REMEDIAL WORK	[ ]	ALTERING CASING	[ ]
TEMPORARILY ABANDON	[ ]			COMMENCE DRILLING OPNS.	[ ]	PLUG AND ABANDONMENT	[XX]
PULL OR ALTER CASING	[ ]	CHANGE PLANS	[ ]	CASING TEST AND CEMENT JOB	[ ]		
OTHER	[ ]			OTHER	[ ]		

17. Describe Proposed or Completed Operations *(Clearly state all pertinent details, and give pertinent dates, including estimated date of starting any proposed work)* SEE RULE 1103.

Plugged and Abandoned well as follows:

8-7-71 Set Cast Iron Bridge Plug @5250' w/20' cement plug on top.

8-13-71 Rigged up. Loaded hole with 9.5# mud.

8-14-71 Shot off 5½" casing @ 4025'. Pulled & laid down casing.

Set 30 sx cement plug 2500'-2600' (base of salt)
Set 30 sx cement plug 1500-1600' (top of salt)
Set 10 sx cement plug 0-30'

Set Marker & cleaned up location - Ready for Inspection 10-1-71.

18. I hereby certify that the information above is true and complete to the best of my knowledge and belief.

SIGNED Harold K Barnes TITLE Agent DATE 9-13-71

APPROVED BY Nathan E Clay TITLE [illegible] DATE

CONDITIONS OF APPROVAL, IF ANY:

Towner Fed 1-15

INJECTION WELL DATA SHEET

SIDE 1

OPERATOR	LEASE			
TOWNER PETROLEUM CO.	Federal "15"			
WELL NO.	FOOTAGE LOCATION	SECTION	TOWNSHIP	RANGE
No. 1	1980' FNL and 1980' FEL of Sec. 15, T-15-S, R-33-E			Lea County, New Mexico

Schematic

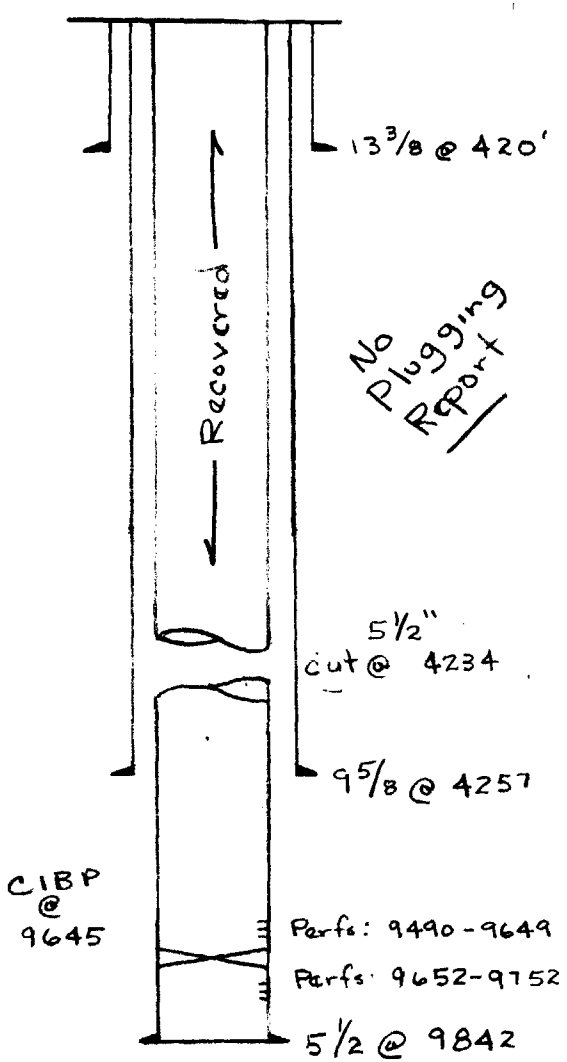

Tabular Data

Surface Casing

Size 13 3/8 " Cemented with 425 sx.

TOC Circ feet determined by visual

Hole size 17 1/4

Intermediate Casing

Size 9 5/8 " Cemented with 1365 sx.

TOC Circ feet determined by visual

Hole size 12 1/4

Long string

Size 5 1/2 " Cemented with 6[illegible] sx.

TOC 7[illegible] feet determined by Temp. Survey?

Hole size 8 1/2

Total depth 1[illegible]42

Injection interval

_____ feet to _____ feet

(perforated or open-hole, indicate which)

Tubing size _____ lined with _____ set in a
(material)

_____ packer at _____ feet
(brand and model)

(or describe any other casing-tubing seal).

Other Data

1. Name of the injection formation _____

2. Name of Field or Pool (if applicable) _____

3. Is this a new well drilled for injection? ☐ Yes ☐ No

   If no, for what purpose was the well originally drilled? _____

   _____

4. Has the well ever been perforated in any other zone(s)? List all such perforated intervals and give plugging detail (sacks of cement or bridge plug(s) used) _____

   _____

   _____

5. Give the depth to and name of any overlying and/or underlying oil or gas zones (pools) in this area. _____

   _____

   _____

Petroleum Information.

© Copyrighted Reproduction Prohibited

COUNTY LEA FIELD Saunders STATE NM

OPR TOWNER PETROLEUM CO. API 30-025-28112

NO 1 LEASE Federal "15" MAP

Sec 15, T15S, R33E COORD

1980 FNL, 1980 FEL of Sec 7-2-15 NM

26 mi SE/Caprock SPD 1-15-83 CMP 4-17-83

CSG

13 3/8-420-425 sx
9 5/8-4257-1365 sx
5 1/2-9842-450 sx

WELL CLASS: INIT D FIN D LSE. CODE

FORMATION	DATUM	FORMATION	DATUM

TD 10,500 (PSLV) PBD

DRY & ABANDONED

CONTR Sierra #3 OPRS ELEV 4180 GL sub-s 17

	F.R. 12-27-82
	PD 10,500 RT (Permo-Pennsylvanian)
2-10-83	Drlg "Tight"
2-15-83	Drlg 8425
2-17-83	Drlg 9375
2-21-83	Drlg 10,500
	2 DST's "Tight"
3-1-83	TD 10,500; PBD 9842; WOCT
3-24-83	TD 10,500; PBD 9842; Swbg
	Perf (Wolfcamp) 9652-9752 w/50 shots
	Acid (9652-9752) 3000 gals
	Swbd 8 BF w/SO (9652-9752)
4-11-83	TD 10,500; PBD 9842; SIBHP
4-20-83	TD 10,500; D&A
7-4-83	TD 10,500; Dry & Abandoned
	Rig Released 2-28-83
7-9-83	COMPLETION ISSUED 7-2-15 NM
	IC 30-025-71000-82

STATES
DEPARTMENT OF THE INTERIOR
GEOLOGICAL SURVEY

SUBMIT IN DUPLICATE (See other instructions on reverse side)

RECEIVED

Form approved. Budget Bureau No. 42-R355.5.

WELL COMPLETION OR RECOMPLETION REPORT AND LOG

TYPE OF WELL: OIL WELL ☐ GAS WELL ☐ DRY ☒ Other

TYPE OF COMPLETION: NEW WELL ☐ WORK OVER ☐ DEEP-EN ☐ PLUG BACK ☐ DIFF. RESVR. ☐ Other

NAME OF OPERATOR: Amer Petroleum Company

ADDRESS: Greenspoint Park Drive, Suite 300, Houston, TX 77060

LOCATION (Report location clearly and in accordance with any State requirements.*): FNL and 1980' FEL

At top prod. interval reported below: Same

At total depth: Same

5. LEASE DESIGNATION AND SERIAL NO.: NM-19857

6. IF INDIAN, ALLOTTEE OR TRIBE NAME:

7. UNIT AGREEMENT NAME:

8. FARM OR LEASE NAME: Federal 15

9. WELL NO.: 1

10. FIELD AND POOL, OR WILDCAT:

11. SEC., T., R., M., OR BLOCK AND SURVEY OR AREA: Sec. 15-T15S-R33E

14. PERMIT NO.: H3119 | DATE ISSUED:

12. COUNTY OR PARISH: Lea | 13. STATE: New Mexico

15. DATE SPUDDED	16. DATE T.D. REACHED	17. DATE COMPL. (Ready to prod.)	18. ELEVATIONS (DF, RKB, RT, GR, ETC.)*	19. ELEV. CASINGHEAD
-13-83	2-25-83	4-8-83	4180GL 4192 KB	4180

20. TOTAL DEPTH, MD & TVD	21. PLUG, BACK T.D., MD & TVD	22. IF MULTIPLE COMPL., HOW MANY*	23. INTERVALS DRILLED BY	ROTARY TOOLS	CABLE TOOLS
[illegible]	9645'	---	→		X

24. PRODUCING INTERVAL(S), OF THIS COMPLETION—TOP, BOTTOM, NAME (MD AND TVD)*: [illegible] 9732' Wolfcamp TVD Requested Status 2/86

25. WAS DIRECTIONAL SURVEY MADE: No

26. TYPE ELECTRIC AND OTHER LOGS RUN: DIL DNL GR

27. WAS WELL CORED: No

CASING RECORD (Report all strings set in well)

CASING SIZE	WEIGHT, LB./FT.	DEPTH SET (MD)	HOLE SIZE	CEMENTING RECORD	AMOUNT PULLED
13 3/8"	48	420	17½	425 sx. Circ. to surface	-0-
8 5/8"	32 & 40	4257	12¼	1365 sx. Circ. to surface	-0-
[illegible]	[illegible]	9842	8¾	600 sx. Top @ 7700	4234

LINER RECORD

SIZE	TOP (MD)	BOTTOM (MD)	SACKS CEMENT*	SCREEN (MD)

30. TUBING RECORD

SIZE	DEPTH SET (MD)	PACKER SET (MD)

31. PERFORATION RECORD (Interval, size and number): [illegible] 9752 w/ 4 SPF set CIBP 9645'

32. ACID, SHOT, FRACTURE, CEMENT SQUEEZE, ETC.

DEPTH INTERVAL (MD)	AMOUNT AND KIND OF MATERIAL USED
9652-9752	11,000 gal 15% HCL
9499-9649	,000 gal 15% HCL

PRODUCTION

FIRST PRODUCTION: | PRODUCTION METHOD (Flowing, gas lift, pumping—size and type of pump): | WELL STATUS (Producing or shut-in):

DATE OF TEST	HOURS TESTED	CHOKE SIZE	PROD'N. FOR TEST PERIOD →	OIL—BBL.	GAS—MCF.	WATER—BBL.	GAS-OIL RATIO

FLOW. TUBING PRESS.	CASING PRESSURE	CALCULATED 24-HOUR RATE →	OIL—BBL.	GAS—MCF.	WATER—BBL.	OIL GRAVITY-API (CORR.)

DISPOSITION OF GAS (Sold, used for fuel, vented, etc.): | TEST WITNESSED BY:

LIST OF ATTACHMENTS:

ACCEPTED FOR RECORD

I hereby certify that the foregoing and attached information is complete and correct as determined from all available records.

SIGNED: C. W. Weaver | TITLE: Regional Manager | DATE: 4/20/83

AUG 1 1983

*(See Instructions and Spaces for Additional Data on Reverse Side)

ROSWELL, NEW MEXICO

INJECTION WELL DATA SHEET

SIDE 1

TEXACO	MCT-1 State AQ		
OPERATOR	LEASE		
2	2271' FNL and 661' FSL of Sec. 3, T-15-S, R-33-E	Lea, New Mexico	
WELL NO.	FOOTAGE LOCATION	SECTION	TOWNSHIP	RANGE

Schematic

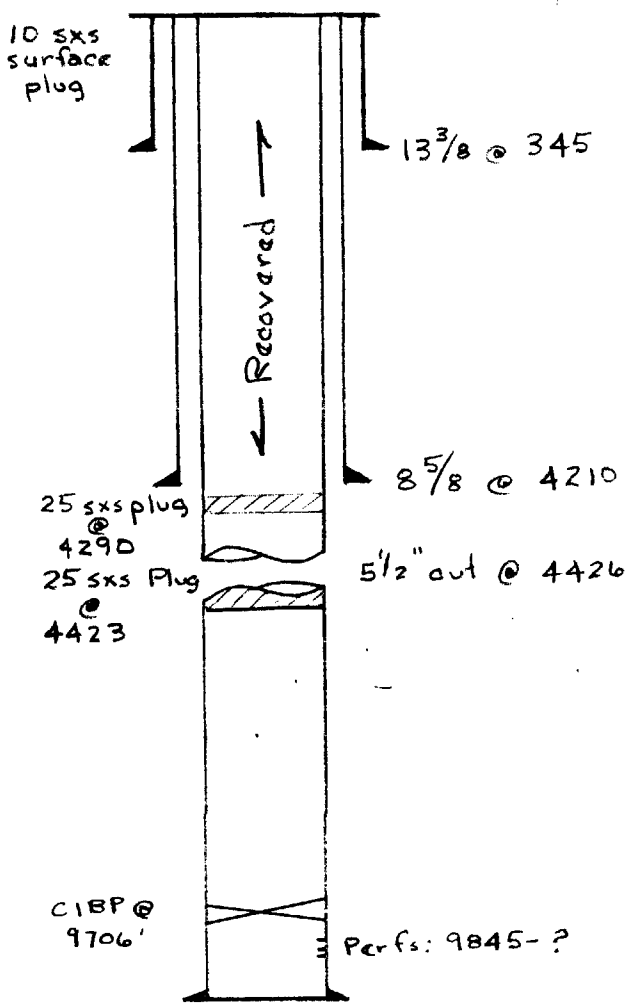

Tabular Data

Surface Casing

Size 13 3/8 " Cemented with [illegible] sx.

TOC surface feet determined by visual

Hole size 17 1/4

Intermediate Casing

Size 8 5/8 " Cemented with 5[illegible] sx.

TOC ? feet determined by

Hole size 12 1/4

Long string

Size 5 1/2 " Cemented with ? sx.

TOC ? feet determined by ?

Hole size 7 7/8

Total depth 9990

Injection interval

_____ feet to _____ feet

(perforated or open-hole, indicate which)

Tubing size _____ lined with _____ set in a
(material)

_____ packer at _____ feet
(brand and model)

(or describe any other casing-tubing seal).

Other Data

1. Name of the injection formation _____

2. Name of Field or Pool (if applicable) _____

3. Is this a new well drilled for injection? ☐ Yes ☐ No

   If no, for what purpose was the well originally drilled? _____

   _____

4. Has the well ever been perforated in any other zone(s)? List all such perforated intervals and give plugging detail (sacks of cement or bridge plug(s) used) _____

   _____

   _____

5. Give the depth to and name of any overlying and/or underlying oil or gas zones (pools) in this area. _____

   _____

   _____

DISTRIBUTION		
SANTA FE		
FILE		
U.S.G.S.		
LAND OFFICE		
OPERATOR		

NEW MEXICO OIL CONSERVATION COMMISSION

O. C. C.
APR 24 9 09 AM '67

Form C-103
Supersedes Old C-102 and C-103
Effective 14-65

5a. Indicate Type of Lease: State [X] Fee [ ]

5. State Oil & Gas Lease No. B-9380

SUNDRY NOTICES AND REPORTS ON WELLS

(DO NOT USE THIS FORM FOR PROPOSALS TO DRILL OR TO DEEPEN OR PLUG BACK TO A DIFFERENT RESERVOIR. USE "APPLICATION FOR PERMIT —" (FORM C-101) FOR SUCH PROPOSALS.)

1. OIL WELL [ ] GAS WELL [ ] OTHER- Injection Well

7. Unit Agreement Name: State S "N" Unit

2. Name of Operator: Amerada Petroleum Corporation

8. Farm or Lease Name:

3. Address of Operator: P.O. Box 668 - Hobbs, New Mexico

9. Well No. 14

4. Location of Well: UNIT LETTER E, 2271 FEET FROM THE North LINE AND 660 FEET FROM THE West LINE, SECTION 3 TOWNSHIP 15S RANGE 33E NMPM.

10. Field and Pool, or Wildcat: Saunders

15. Elevation (Show whether DF, RT, GR, etc.): 4208' DF

12. County: Lea

16. Check Appropriate Box To Indicate Nature of Notice, Report or Other Data

NOTICE OF INTENTION TO:

- PERFORM REMEDIAL WORK [ ]
- PLUG AND ABANDON [ ]
- TEMPORARILY ABANDON [ ]
- PULL OR ALTER CASING [ ]
- CHANGE PLANS [ ]
- OTHER [ ]

SUBSEQUENT REPORT OF:

- REMEDIAL WORK [ ]
- ALTERING CASING [ ]
- COMMENCE DRILLING OPNS. [ ]
- PLUG AND ABANDONMENT [ ]
- CASING TEST AND CEMENT JOB [ ]
- OTHER Convert to Injection Well [X]

17. Describe Proposed or Completed Operations (Clearly state all pertinent details, and give pertinent dates, including estimated date of starting any proposed work) SEE RULE 1103.

Pulled and laid down tubing & hyd. pumping equipment. Drilled 4-5/8" hole from 9900' to 9937'. Acidized OH 9900' to 9937' with 1000 gals. 15% FE acid. Ran 324 jts. 2-7/8" OD internally coated tubing set at 9664' with Baker Lok-Set packer at 9664' with 11,000# tension. Started injecting water 4-20-67.
Classification changed from Penn. zone oil well to Penn. zone water injection well 4-20-67.

18. I hereby certify that the information above is true and complete to the best of my knowledge and belief.

SIGNED B. J. Lim TITLE District Superintendent DATE 4-21-67

APPROVED BY _____ TITLE _____ DATE _____

CONDITIONS OF APPROVAL, IF ANY:

Testing Method (pitot, back pr.)	Tubing Pressure (Shut-in)	Casing Pressure (Shut-in)	Choke Size

MALCO REFINERIES, Inc. WEEKLY REPORT Field Saunders

SCOUT REPORT

Scout Dist. No. 5

COMPANY Texas Co. WELL NO. 2 FARM State AC

County Lea State N.M.

Spd. 8-8-51 Comp. 11-16-51

Contractor Tex Method

El. D. F. 4202 Gr.

FORMATIONS: Penetrated

TA

TX

BX

TTL

TSR

TQ

TGr

TSA 4210

TG1 3700

TCT

T Tubbs 2500

T Abo 7100

T Hueco

T. Penn.

T. Miss.

T. Dev.

T. Mont.

T. Simp.

T. McKee

T. Ell.

T. Pre-Cam.

TWC 9100

S/

S/

S/

S/

S/

S/

Grav. 41 GOR 1600

FCP 270 SICP

FTP 800-100 SITP

Sec. 3 Twp. 15 S Rge. 33 E

Loc. 2271' FN FE FS 661' FW

9900' Test

Location.

11-14 Ran

11-15 @ 2910 KB.

11-17 @ 4700 ft.

11-18 @ 5224 [illegible] ft.

[illegible]

11-19 @ 8063 [illegible]

11-20 @ 9009 [illegible]

[illegible]

[illegible]

11-22

The Subsurface Library
P. O. Box 942
Midland, Texas

CASING & CEMENT

Size	Depth	Sax
13 3/8	345	350
[illegible]	[illegible]	[illegible]

COMPLETION RECORD

T. D. 6990 PB

T. P. 9145

IP F 242 BOPD 23/64

Tubing 2 Ch. 1/2 @ 9543

Packer

Perf.

SHOOTING RECORD

Qts. From

Qts. From

Qts. From

Results

ACIDIZING RECORD

Gal. 600 Zone

Gal. Zone

Gal. Zone

Results

SAGE ENERGY COMPANY
P. O. DRAWER 3068
MIDLAND, TEXAS 79702

915/683-5271

April 16, 1986

CERTIFIED MAIL

Mr. Jerry Dean
1532 Burch Street
Lovington, New Mexico 88260

Re: Sage Energy Company Lowe State No. 1, Saunders (Penn) Field, 660' FWL and 1980' FSL of Sec. 10, T-15-S, R-33-E, Lea County, New Mexico.

Dear Mr. Dean:

Sage has made application to the New Mexico Conservation Commission to convert the referenced well to a disposal facility. We plan to use the existing perforations in the Saunders (Penn) formation from 9,565' to 10,000' for this purpose. It is our intent to dispose of the produced water from the Lowe State No. 2, using the existing flow line. The surface of the land will not be disturbed using this process. As surface owner, we request your consideration and approval.

If you have any questions regarding this matter, please call.

Very truly yours,

Jay H. Hardy
Vice President - Engineering

JHH:h

P 397 521 575

RECEIPT FOR CERTIFIED MAIL

NO INSURANCE COVERAGE PROVIDED—
NOT FOR INTERNATIONAL MAIL

(See Reverse)

Sent to Jerry Dean	
Street and No. 1532 Burch Street	
P.O., State and ZIP Code Lovington, New Mexico 88260	
Postage	$ 1.25
Certified Fee	.85
Special Delivery Fee	
Restricted Delivery Fee	1.25
Return Receipt Showing to whom and Date Delivered	.75
Return Receipt Showing to whom, Date, and Address of Delivery	
TOTAL Postage and Fees	$ 4.10
Postmark or Date April 16, 1986	

PS Form 3800, Feb. 1982

PS Form 3811, Dec. 1980

RETURN RECEIPT, REGISTERED, INSURED AND CERTIFIED M...

● SENDER: Complete items 1, 2, 3, and 4.
Add your address in the "RETURN TO" space on reverse.

(CONSULT POSTMASTER FOR FEES)

1. The following service is requested (check one).
☐ Show to whom and date delivered ..... ¢
☐ Show to whom, date, and address of delivery.. ¢
2. ☐ RESTRICTED DELIVERY ¢
(The restricted delivery fee is charged in addition to the return receipt fee.)

TOTAL $

3. ARTICLE ADDRESSED TO:
Jerry Dean
1532 Burch Street
Lovington, New Mexico 88260

4. TYPE OF SERVICE: ☐ REGISTERED ☐ INSURED ☐ CERTIFIED ☐ COD ☐ EXPRESS MAIL
ARTICLE NUMBER P397 521 575

(Always obtain signature of addressee or agent)

I have received the article described above.
SIGNATURE ☐ Addressee ☐ Authorized agent
Donna Dean

5. DATE OF DELIVERY 4/22/86
POSTMARK

6. ADDRESSEE'S ADDRESS (Only if requested)

7. UNABLE TO DELIVER BECAUSE:

7a. EMPLOYEE'S INITIALS