NM OIL CONSERVATION
ARTESIA DISTRICT
OCT 20 2017
RECEIVED

Form 3160-3
(March 2012)

FORM APPROVED
OMB No. 1004-0137
Expires October 31, 2014

UNITED STATES
DEPARTMENT OF THE INTERIOR
BUREAU OF LAND MANAGEMENT

APPLICATION FOR PERMIT TO DRILL OR REENTER

5. Lease Serial No.
NMNM29234

6. If Indian, Allotee or Tribe Name

1a. Type of work: ☑ DRILL ☐ REENTER

7. If Unit or CA Agreement, Name and No.

1b. Type of Well: ☑ Oil Well ☐ Gas Well ☐ Other ☐ Single Zone ☑ Multiple Zone

8. Lease Name and Well No.
PATTON MDP1 17 FEDERAL 4H 319619

2. Name of Operator
OXY USA INCORPORATED 16696

9. API Well No.
30-015-44497

3a. Address
5 Greenway Plaza, Suite 110 Houston TX 770

3b. Phone No. *(include area code)*
(713)366-5716

10. Field and Pool, or Exploratory
COTTON DRAW BONE SPRING / 2ND I

4. Location of Well *(Report location clearly and in accordance with any State requirements.*)*
At surface SESW / 432 FSL / 2292 FWL / LAT 32.2257806 / LONG -103.8009777
At proposed prod. zone SWSE / 190 FSL / 2211 FEL / LAT 32.2105987 / LONG -103.7984406

11. Sec., T. R. M. or Blk. and Survey or Area
SEC 8 / T24S / R31E / NMP

14. Distance in miles and direction from nearest town or post office*
15 miles

12. County or Parish
EDDY

13. State
NM

15. Distance from proposed* location to nearest property or lease line, ft. (Also to nearest drig. unit line, if any) 100 feet

16. No. of acres in lease
1280

17. Spacing Unit dedicated to this well
160

18. Distance from proposed location* to nearest well, drilling, completed, applied for, on this lease, ft. 30 feet

19. Proposed Depth
10107 feet / 15805 feet

20. BLM/BIA Bond No. on file
FED: ESB000226

21. Elevations (Show whether DF, KDB, RT, GL, etc.)
3541 feet

22. Approximate date work will start*
07/25/2018

23. Estimated duration
25 days

24. Attachments

The following, completed in accordance with the requirements of Onshore Oil and Gas Order No.1, must be attached to this form:

1. Well plat certified by a registered surveyor.
2. A Drilling Plan.
3. A Surface Use Plan (if the location is on National Forest System Lands, the SUPO must be filed with the appropriate Forest Service Office).
4. Bond to cover the operations unless covered by an existing bond on file (see Item 20 above).
5. Operator certification
6. Such other site specific information and/or plans as may be required by the BLM.

25. Signature
(Electronic Submission)

Name *(Printed/Typed)*
David Stewart / Ph: (713)366-5716

Date
03/14/2017

Title
Sr. Regulatory Advisor

Approved by *(Signature)*
(Electronic Submission)

Name *(Printed/Typed)*
Cody Layton / Ph: (575)234-5959

Date
10/12/2017

Title
Supervisor Multiple Resources

Office
CARLSBAD

Application approval does not warrant or certify that the applicant holds legal or equitable title to those rights in the subject lease which would entitle the applicant to conduct operations thereon.
Conditions of approval, if any, are attached.

Title 18 U.S.C. Section 1001 and Title 43 U.S.C. Section 1212, make it a crime for any person knowingly and willfully to make to any department or agency of the United States any false, fictitious or fraudulent statements or representations as to any matter within its jurisdiction.

(Continued on page 2)

*(Instructions on page 2)

APPROVED WITH CONDITIONS

RLP 10-24-2017

INSTRUCTIONS

GENERAL: This form is designed for submitting proposals to perform certain well operations, as indicated on Federal and Indian lands and leases for action by appropriate Federal agencies, pursuant to applicable Federal laws and regulations. Any necessary special instructions concerning the use of this form and the number of copies to be submitted, particularly with regard to local, area, or regional procedures and practices, either are shown below or will be issued by, or may be obtained from local Federal offices.

ITEM 1: If the proposal is to redrill to the same reservoir at a different subsurface location or to a new reservoir, use this form with appropriate notations. Consult applicable Federal regulations concerning subsequent work proposals or reports on the well.

ITEM 4: Locations on Federal or Indian land should be described in accordance with Federal requirements. Consult local Federal offices for specific instructions.

ITEM 14: Needed only when location of well cannot readily be found by road from the land or lease description. A plat, or plats, separate or on the reverse side, showing the roads to, and the surveyed location of, the well, and any other required information, should be furnished when required by Federal agency offices.

ITEMS 15 AND 18: If well is to be, or has been directionally drilled, give distances for subsurface location of hole in any present or objective productive zone.

ITEM 22: Consult applicable Federal regulations, or appropriate officials, concerning approval of the proposal before operations are started.

NOTICES

The Privacy Act of 1974 and regulation in 43 CFR 2.48(d) provide that you be furnished the following information in connection with information required by this application.
AUTHORITY: 30 U.S.C. 181 et seq., 25 U.S.C. 396; 43 CFR 3160
PRINCIPAL PURPOSES: The information will be used to: (1) process and evaluate your application for a permit to drill a new oil, gas, or service well or to reenter a plugged and abandoned well; and (2) document, for administrative use, information for the management, disposal and use of National Resource Lands and resources including (a) analyzing your proposal to discover and extract the Federal or Indian resources encountered; (b) reviewing procedures and equipment and the projected impact on the land involved; and (c) evaluating the effects of the proposed operation on the surface and subsurface water and other environmental impacts.
ROUTINE USE: Information from the record and/or the record will be transferred to appropriate Federal, State, and local or foreign agencies, when relevant to civil, criminal or regulatory investigations or prosecution, in connection with congressional inquiries and for regulatory responsibilities.
EFFECT OF NOT PROVIDING INFORMATION: Filing of this application and disclosure of the information is mandatory only if you elect to initiate a drilling or reentry operation on an oil and gas lease.

The Paperwork Reduction Act of 1995 requires us to inform you that:
The BLM collects this information to allow evaluation of the technical, safety, and environmental factors involved with drilling for oil and/or gas on Federal and Indian oil and gas leases. This information will be used to analyze and approve applications. Response to this request is mandatory only if the operator elects to initiate drilling or reentry operations on an oil and gas lease. The BLM would like you to know that you do not have to respond to this or any other Federal agency-sponsored information collection unless it displays a currently valid OMB control number.

BURDEN HOURS STATEMENT: Public reporting burden for this form is estimated to average 8 hours per response, including the time for reviewing instructions, gathering and maintaining data, and completing and reviewing the form. Direct comments regarding the burden estimate or any other aspect of this form to U.S. Department of the Interior, Bureau of Land Management (1004-0137), Bureau Information Collection Clearance Officer (WO-630), 1849 C Street, N.W., Mail Stop 401 LS, Washington, D.C. 20240.

(Continued on page 3)

Additional Operator Remarks

Location of Well

1. SHL: SESW / 432 FSL / 2292 FWL / TWSP: 24S / RANGE: 31E / SECTION: 8 / LAT: 32.2257806 / LONG: -103.8009777 (TVD: 0 feet, MD: 0 feet)

   PPP: NWNE / 340 FNL / 2205 FEL / TWSP: 24S / RANGE: 31E / SECTION: 17 / LAT: 32.22366 / LONG: -103.7984344 (TVD: 10115 feet, MD: 11053 feet)

   BHL: SWSE / 190 FSL / 2211 FEL / TWSP: 24S / RANGE: 31E / SECTION: 17 / LAT: 32.2105987 / LONG: -103.7984406 (TVD: 10107 feet, MD: 15805 feet)

BLM Point of Contact

Name: Priscilla Perez

Title: Legal Instruments Examiner

Phone: 5752345934

Email: pperez@blm.gov

Review and Appeal Rights

A person contesting a decision shall request a State Director review. This request must be filed within 20 working days of receipt of the Notice with the appropriate State Director (see 43 CFR 3165.3). The State Director review decision may be appealed to the Interior Board of Land Appeals, 801 North Quincy Street, Suite 300, Arlington, VA 22203 (see 43 CFR 3165.4). Contact the above listed Bureau of Land Management office for further information.

PECOS DISTRICT
SURFACE USE
CONDITIONS OF APPROVAL

OPERATOR'S NAME:	OXY USA INC.
LEASE NO.:	NMNM29234
WELL NAME & NO.:	4H –PATTON MDP1 17 FEDERAL
SURFACE HOLE FOOTAGE:	432'/S & 2292'/W
BOTTOM HOLE FOOTAGE	190'/S & 2211'/E
LOCATION:	Section 8 T.24 S., R.31 E., NMP
COUNTY:	EDDY County, New Mexico

Potash	○ None	◉ Secretary	○ R-111-P
Cave/Karst Potential	◉ Low	○ Medium	○ High
Variance	○ None	◉ Flex Hose	○ Other
Wellhead	○ Conventional	◉ Multibowl	
Other	☐4 String Area	☐Capitan Reef	☐WIPP

A. Hydrogen Sulfide

1. Hydrogen Sulfide (H2S) monitors shall be installed prior to drilling out the surface shoe. If H2S is detected in concentrations greater than 100 ppm, the Hydrogen Sulfide area shall meet Onshore Order 6 requirements, which includes equipment and personnel/public protection items. If Hydrogen Sulfide is encountered, provide measured values and formations to the BLM.

B. CASING

1. The **13 3/8** inch surface casing shall be set at approximately **727** feet (a minimum of 25 feet into the Rustler Anhydrite and above the salt) and cemented to the surface.

    a. If cement does not circulate to the surface, the appropriate BLM office shall be notified and a temperature survey utilizing an electronic type temperature survey with surface log readout will be used or a cement bond log shall be run to verify the top of the cement. Temperature survey will be run a minimum of six hours after pumping cement and ideally between 8-10 hours after completing the cement job.

    b. Wait on cement (WOC) time for a primary cement job will be a minimum of **24 hours in the Potash Area** or 500 pounds compressive strength, whichever is greater. (This is to include the lead cement)

    c. Wait on cement (WOC) time for a remedial job will be a minimum of 4 hours

after bringing cement to surface or 500 pounds compressive strength, whichever is greater.

d. If cement falls back, remedial cementing will be done prior to drilling out that string.

Intermediate casing must be kept fluid filled to meet BLM minimum collapse requirement.

2. The minimum required fill of cement behind the **9 5/8** inch intermediate casing, is:

   - Cement to surface. If cement does not circulate see B.1.a, c-d above. **Wait on cement (WOC) time for a primary cement job is to include the lead cement slurry due to potash.**

3. The minimum required fill of cement behind the **5 1/2** inch production casing is:

   - Cement should tie-back at least **500** feet into previous casing string. Operator shall provide method of verification.

C. PRESSURE CONTROL

1. Variance approved to use flex line from BOP to choke manifold. Manufacturer's specification to be readily available. No external damage to flex line. Flex line to be installed as straight as possible (no hard bends).

2. **Operator has proposed a multi-bowl wellhead assembly. This assembly will only be tested when installed on the surface casing. Minimum working pressure of the blowout preventer (BOP) and related equipment (BOPE) required for drilling below the surface casing shoe shall be 5000 (5M) psi.**

   a. Wellhead shall be installed by manufacturer's representatives, submit documentation with subsequent sundry.
   b. If the welding is performed by a third party, the manufacturer's representative shall monitor the temperature to verify that it does not exceed the maximum temperature of the seal.
   c. Manufacturer representative shall install the test plug for the initial BOP test.
   d. If the cement does not circulate and one inch operations would have been possible with a standard wellhead, the well head shall be cut off, cementing operations performed and another wellhead installed.

D. SPECIAL REQUIREMENT(S)

Waste Minimization Plan (WMP)

In the interest of resource development, submission of additional well gas capture development plan information is deferred but may be required by the BLM Authorized Officer at a later date.

MHH 10052017

GENERAL REQUIREMENTS

The BLM is to be notified in advance for a representative to witness:

a. Spudding well (minimum of 24 hours)
b. Setting and/or Cementing of all casing strings (minimum of 4 hours)
c. BOPE tests (minimum of 4 hours)

☒ Chaves and Roosevelt Counties
Call the Roswell Field Office, 2909 West Second St., Roswell NM 88201.
During office hours call (575) 627-0272.
After office hours call (575)

☒ Eddy County
Call the Carlsbad Field Office, 620 East Greene St., Carlsbad, NM 88220, (575) 361-2822

☒ Lea County
Call the Hobbs Field Station, 414 West Taylor, Hobbs NM 88240, (575) 393-3612

1. Unless the production casing has been run and cemented or the well has been properly plugged, the drilling rig shall not be removed from over the hole without prior approval.

   a. In the event the operator has proposed to drill multiple wells utilizing a skid/walking rig. Operator shall secure the wellbore on the current well, after installing and testing the wellhead, by installing a blind flange of like pressure rating to the wellhead and a pressure gauge that can be monitored while drilling is performed on the other well(s).
   b. When the operator proposes to set surface casing with Spudder Rig
      - Notify the BLM when moving in and removing the Spudder Rig.
      - Notify the BLM when moving in the 2nd Rig. Rig to be moved in within 90 days of notification that Spudder Rig has left the location.
      - BOP/BOPE test to be conducted per Onshore Oil and Gas Order No. 2 as soon as 2nd Rig is rigged up on well.

2. Floor controls are required for 3M or Greater systems. These controls will be on the rig floor, unobstructed, readily accessible to the driller and will be operational at all times during drilling and/or completion activities. Rig floor is defined as the area immediately around the rotary table; the area immediately above the substructure on which the draw works are located, this does not include the dog house or stairway area.

3. The record of the drilling rate along with the GR/N well log run from TD to surface (horizontal well – vertical portion of hole) shall be submitted to the BLM office as well as all other logs run on the borehole 30 days from completion. If available, a digital copy of the logs is to be submitted in addition to the paper copies. The Rustler top and top and bottom of Salt are to be recorded on the Completion Report.

A. CASING

1. Changes to the approved APD casing program need prior approval if the items substituted are of lesser grade or different casing size or are Non-API. The Operator can exchange the components of the proposal with that of superior strength (i.e. changing from J-55 to N-80, or from 36# to 40#). Changes to the approved cement program need prior approval if the altered cement plan has less volume or strength or if the changes are substantial (i.e. Multistage tool, ECP, etc.). The initial wellhead installed on the well will remain on the well with spools used as needed.

2. Wait on cement (WOC) for Potash Areas: After cementing but before commencing any tests, the casing string shall stand cemented under pressure until both of the following conditions have been met: 1) cement reaches a minimum compressive strength of 500 psi for all cement blends, 2) until cement has been in place at least 24 hours. WOC time will be recorded in the driller's log.

3. Wait on cement (WOC) for Water Basin: After cementing but before commencing any tests, the casing string shall stand cemented under pressure until both of the following conditions have been met: 1) cement reaches a minimum compressive strength of 500 psi at the shoe, 2) until cement has been in place at least 8 hours. WOC time will be recorded in the driller's log. See individual casing strings for details regarding lead cement slurry requirements.

4. Provide compressive strengths including hours to reach required 500 pounds compressive strength prior to cementing each casing string. Have well specific cement details onsite prior to pumping the cement for each casing string.

5. No pea gravel permitted for remedial or fall back remedial without prior authorization from the BLM engineer.

6. On that portion of any well approved for a 5M BOPE system or greater, a pressure integrity test of each casing shoe shall be performed. Formation at the shoe shall be tested to a minimum of the mud weight equivalent anticipated to control the formation pressure to the next casing depth or at total depth of the well. This test shall be performed before drilling more than 20 feet of new hole.

7. If hardband drill pipe is rotated inside casing, returns will be monitored for metal. If metal is found in samples, drill pipe will be pulled and rubber protectors which have a larger diameter than the tool joints of the drill pipe will be installed prior to continuing drilling operations.

8. Whenever a casing string is cemented in the R-111-P potash area, the NMOCD requirements shall be followed.

B. PRESSURE CONTROL

1. All blowout preventer (BOP) and related equipment (BOPE) shall comply with well control requirements as described in Onshore Oil and Gas Order No. 2 and API RP 53 Sec. 17.

2. If a variance is approved for a flexible hose to be installed from the BOP to the choke manifold, the following requirements apply: Check condition of flexible line from BOP to choke manifold, replace if exterior is damaged or if line fails test. Line to be as straight as possible with no hard bends and is to be anchored according to Manufacturer's requirements. The flexible hose can be exchanged with a hose of equal size and equal or greater pressure rating. Anchor requirements, specification sheet and hydrostatic pressure test certification matching the hose in service, to be onsite for review. These documents shall be posted in the company man's trailer and on the rig floor.

3. 5M or higher system requires an HCR valve, remote kill line and annular to match. The remote kill line is to be installed prior to testing the system and tested to stack pressure.

4. If the operator has proposed a multi-bowl wellhead assembly in the APD. The following requirements must be met:

    a. Wellhead shall be installed by manufacturer's representatives, submit documentation with subsequent sundry.
    b. If the welding is performed by a third party, the manufacturer's representative shall monitor the temperature to verify that it does not exceed the maximum temperature of the seal.
    c. Manufacturer representative shall install the test plug for the initial BOP test.
    d. Operator shall perform the intermediate casing integrity test to 70% of the casing burst. This will test the multi-bowl seals.
    e. If the cement does not circulate and one inch operations would have been possible with a standard wellhead, the well head shall be cut off, cementing operations performed and another wellhead installed.

5. The appropriate BLM office shall be notified a minimum of 4 hours in advance for a representative to witness the tests.

    a. In a water basin, for all casing strings utilizing slips, these are to be set as soon as the crew and rig are ready and any fallback cement remediation has been done. The casing cut-off and BOP installation can be initiated four hours after installing the slips, which will be approximately six hours after bumping the

plug. For those casing strings not using slips, the minimum wait time before cut-off is eight hours after bumping the plug. BOP/BOPE testing can begin after cut-off or once cement reaches 500 psi compressive strength (including lead when specified), whichever is greater. However, if the float does not hold, cut-off cannot be initiated until cement reaches 500 psi compressive strength (including lead when specified).

b. In potash areas, for all casing strings utilizing slips, these are to be set as soon as the crew and rig are ready and any fallback cement remediation has been done. For all casing strings, casing cut-off and BOP installation can be initiated at twelve hours after bumping the plug. However, **no tests** shall commence until the cement has had a minimum of 24 hours setup time.

c. The tests shall be done by an independent service company utilizing a test plug not a cup or J-packer. The operator also has the option of utilizing an independent tester to test without a plug (i.e. against the casing) pursuant to Onshore Order 2 with the pressure not to exceed 70% of the burst rating for the casing. Any test against the casing must meet the WOC time for water basin (8 hours) or potash (24 hours) or 500 pounds compressive strength, whichever is greater, prior to initiating the test (see casing segment as lead cement may be critical item).

d. The test shall be run on a 5000 psi chart for a 2-3M BOP/BOP, on a 10000 psi chart for a 5M BOP/BOPE and on a 15000 psi chart for a 10M BOP/BOPE. If a linear chart is used, it shall be a one hour chart. A circular chart shall have a maximum 2 hour clock. If a twelve hour or twenty-four hour chart is used, tester shall make a notation that it is run with a two hour clock.

e. The results of the test shall be reported to the appropriate BLM office.

f. All tests are required to be recorded on a calibrated test chart. A copy of the BOP/BOPE test chart and a copy of independent service company test will be submitted to the appropriate BLM office.

g. The BOP/BOPE test shall include a low pressure test from 250 to 300 psi. The test will be held for a minimum of 10 minutes if test is done with a test plug and 30 minutes without a test plug. This test shall be performed prior to the test at full stack pressure.

h. BOP/BOPE must be tested by an independent service company within 500 feet of the top of the Wolfcamp formation if the time between the setting of the intermediate casing and reaching this depth exceeds 20 days. This test does not exclude the test prior to drilling out the casing shoe as per Onshore Order No. 2.

C. DRILLING MUD

Mud system monitoring equipment, with derrick floor indicators and visual and audio alarms, shall be operating before drilling into the Wolfcamp formation, and shall be used until production casing is run and cemented.

D. WASTE MATERIAL AND FLUIDS

All waste (i.e. drilling fluids, trash, salts, chemicals, sewage, gray water, etc.) created as a result of drilling operations and completion operations shall be safely contained and disposed of properly at a waste disposal facility. No waste material or fluid shall be disposed of on the well location or surrounding area.

Porto-johns and trash containers will be on-location during fracturing operations or any other crew-intensive operations.

PECOS DISTRICT
SURFACE USE
CONDITIONS OF APPROVAL

OPERATOR'S NAME:	OXY USA INC.
LEASE NO.:	NMNM29234
WELL NAME & NO.:	4H –PATTON MDP1 17 FEDERAL
SURFACE HOLE FOOTAGE:	432'/S & 2292'/W
BOTTOM HOLE FOOTAGE	190'/S & 2211'/E
LOCATION:	Section 8 T.24 S., R.31 E., NMP
COUNTY:	EDDY County, New Mexico

TABLE OF CONTENTS

Standard Conditions of Approval (COA) apply to this APD. If any deviations to these standards exist or special COAs are required, the section with the deviation or requirement will be checked below.

☐ **General Provisions**
☐ **Permit Expiration**
☐ **Archaeology, Paleontology, and Historical Sites**
☐ **Noxious Weeds**
☒ **Special Requirements**
- Lesser Prairie-Chicken Timing Stipulations
- Below Ground-level Abandoned Well Marker
- Watershed
- Cave/Karst

☐ **Construction**
- Notification
- Topsoil
- Closed Loop System
- Federal Mineral Material Pits
- Well Pads
- Roads

☐ **Road Section Diagram**
☒ **Production (Post Drilling)**
- Well Structures & Facilities
- Pipelines
- Electric Lines

☐ **Interim Reclamation**
☐ **Final Abandonment & Reclamation**

I. GENERAL PROVISIONS

The approval of the Application For Permit To Drill (APD) is in compliance with all applicable laws and regulations: 43 Code of Federal Regulations 3160, the lease terms, Onshore Oil and Gas Orders, Notices To Lessees, New Mexico Oil Conservation Division (NMOCD) Rules, National Historical Preservation Act As Amended, and instructions and orders of the Authorized Officer. Any request for a variance shall be submitted to the Authorized Officer on Form 3160-5, Sundry Notices and Report on Wells.

II. PERMIT EXPIRATION

If the permit terminates prior to drilling and drilling cannot be commenced within 60 days after expiration, an operator is required to submit Form 3160-5, Sundry Notices and Reports on Wells, requesting surface reclamation requirements for any surface disturbance. However, if the operator will be able to initiate drilling within 60 days after the expiration of the permit, the operator must have set the conductor pipe in order to allow for an extension of 60 days beyond the expiration date of the APD. (Filing of a Sundry Notice is required for this 60 day extension.)

III. ARCHAEOLOGICAL, PALEONTOLOGY & HISTORICAL SITES

Any cultural and/or paleontological resource discovered by the operator or by any person working on the operator's behalf shall immediately report such findings to the Authorized Officer. The operator is fully accountable for the actions of their contractors and subcontractors. The operator shall suspend all operations in the immediate area of such discovery until written authorization to proceed is issued by the Authorized Officer. An evaluation of the discovery shall be made by the Authorized Officer to determine the appropriate actions that shall be required to prevent the loss of significant cultural or scientific values of the discovery. The operator shall be held responsible for the cost of the proper mitigation measures that the Authorized Officer assesses after consultation with the operator on the evaluation and decisions of the discovery. Any unauthorized collection or disturbance of cultural or paleontological resources may result in a shutdown order by the Authorized Officer.

IV. NOXIOUS WEEDS

The operator shall be held responsible if noxious weeds become established within the areas of operations. Weed control shall be required on the disturbed land where noxious weeds exist, which includes the roads, pads, associated pipeline corridor, and adjacent land affected by the establishment of weeds due to this action. The operator shall consult with the Authorized Officer for acceptable weed control methods, which include following EPA and BLM requirements and policies.

V. SPECIAL REQUIREMENT(S)

Timing Limitation Stipulation / Condition of Approval for lesser prairie-chicken: Oil and gas activities including 3-D geophysical exploration, and drilling will not be allowed in lesser prairie-chicken habitat during the period from March 1st through June 15th annually. During that period, other activities that produce noise or involve human activity, such as the maintenance of oil and gas facilities, pipeline, road, and well pad construction, will be allowed except between 3:00 am and 9:00 am. The 3:00 am to 9:00 am restriction will not apply to normal, around-the-clock operations, such as venting, flaring, or pumping, which do not require a human presence during this period. Additionally, no new drilling will be allowed within up to 200 meters of leks known at the time of permitting. Normal vehicle use on existing roads will not be restricted. Exhaust noise from pump jack engines must be muffled or otherwise controlled so as not to exceed 75 db measured at 30 feet from the source of the noise.

Below Ground-level Abandoned Well Marker to avoid raptor perching: Upon the plugging and subsequent abandonment of the well, the well marker will be installed at ground level on a plate containing the pertinent information for the plugged well. For more installation details, contact the Carlsbad Field Office at 575-234-5972.

Watershed

- The entire well pad will be bermed to prevent oil, salt, and other chemical contaminants from leaving the well pad. Topsoil shall not be used to construct the berm. No water flow from the uphill side(s) of the pad shall be allowed to enter the well pad. The berm shall be maintained through the life of the well and after interim reclamation has been completed.
- Any water erosion that may occur due to the construction of the well pad during the life of the well will be quickly corrected and proper measures will be taken to prevent future erosion.

Cave Karst

** Depending on location, additional Drilling, Casing, and Cementing procedures may be required by engineering to protect critical karst groundwater recharge areas.

Cave/Karst Surface Mitigation

The following stipulations will be applied to minimize impacts during construction, drilling and production.

Construction:

In the advent that any underground voids are opened up during construction activities, construction activities will be halted and the BLM will be notified immediately.

No Blasting:

No blasting will be utilized for pad construction. The pad will be constructed and leveled by adding the necessary fill and caliche.

Pad Berming:
The entire perimeter of the well pad will be bermed to prevent oil, salt, and other chemical contaminants from leaving the well pad.

- The compacted berm shall be constructed at a minimum of 12 inches high with impermeable mineral material (e.g. caliche).
- No water flow from the uphill side(s) of the pad shall be allowed to enter the well pad.
- The topsoil stockpile shall be located outside the bermed well pad.
- Topsoil, either from the well pad or surrounding area, shall not be used to construct the berm.
- No storm drains, tubing or openings shall be placed in the berm.
- If fluid collects within the bermed area, the fluid must be vacuumed into a safe container and disposed of properly at a state approved facility.
- The integrity of the berm shall be maintained around the surfaced pad throughout the life of the well and around the downsized pad after interim reclamation has been completed.
- Any access road entering the well pad shall be constructed so that the integrity of the berm height surrounding the well pad is not compromised. (Any access road crossing the berm cannot be lower than the berm height.)

Tank Battery Liners and Berms:
Tank battery locations and all facilities will be lined and bermed. A 20 mil permanent liner will be installed with a 4 oz. felt backing to prevent tears or punctures. Tank battery berms must be large enough to contain 1 ½ times the content of the largest tank.

Leak Detection System:
A method of detecting leaks is required. The method could incorporate gauges to measure loss, situating values and lines so they can be visually inspected, or installing electronic sensors to alarm when a leak is present. Leak detection plan will be submitted to BLM for approval.

Automatic Shut-off Systems:
Automatic shut off, check values, or similar systems will be installed for pipelines and tanks to minimize the effects of catastrophic line failures used in production or drilling.

Cave/Karst Subsurface Mitigation

The following stipulations will be applied to protect cave/karst and ground water concerns:

Rotary Drilling with Fresh Water:
Fresh water will be used as a circulating medium in zones where caves or karst features are expected. SEE ALSO: Drilling COAs for this well.

Directional Drilling:

Kick off for directional drilling will occur at least 100 feet below the bottom of the cave occurrence zone. SEE ALSO: Drilling COAs for this well.

Lost Circulation:
ALL lost circulation zones from the surface to the base of the cave occurrence zone will be logged and reported in the drilling report.

Regardless of the type of drilling machinery used, if a void of four feet or more and circulation losses greater than 70 percent occur simultaneously while drilling in any cave-bearing zone, the BLM will be notified immediately by the operator. The BLM will assess the situation and work with the operator on corrective actions to resolve the problem.

Abandonment Cementing:
Upon well abandonment in high cave karst areas additional plugging conditions of approval may be required. The BLM will assess the situation and work with the operator to ensure proper plugging of the wellbore.

Pressure Testing:
Annual pressure monitoring will be performed by the operator on all casing annuli and reported in a sundry notice. If the test results indicated a casing failure has occurred, remedial action will be undertaken to correct the problem to the BLM's approval.

VI. CONSTRUCTION

A. NOTIFICATION

The BLM shall administer compliance and monitor construction of the access road and well pad. Notify the Carlsbad Field Office at (575) 234-5909 at least 3 working days prior to commencing construction of the access road and/or well pad.

When construction operations are being conducted on this well, the operator shall have the approved APD and Conditions of Approval (COA) on the well site and they shall be made available upon request by the Authorized Officer.

B. TOPSOIL

The operator shall strip the top portion of the soil (root zone) from the entire well pad area and stockpile the topsoil along the edge of the well pad as depicted in the APD. The root zone is typically six (6) inches in depth. All the stockpiled topsoil will be redistributed over the interim reclamation areas. Topsoil shall not be used for berming the pad or facilities. For final reclamation, the topsoil shall be spread over the entire pad area for seeding preparation.

Other subsoil (below six inches) stockpiles must be completely segregated from the topsoil stockpile. Large rocks or subsoil clods (not evident in the surrounding terrain) must be buried within the approved area for interim and final reclamation.

C. CLOSED LOOP SYSTEM

Tanks are required for drilling operations: No Pits.

The operator shall properly dispose of drilling contents at an authorized disposal site.

D. FEDERAL MINERAL MATERIALS PIT

Payment shall be made to the BLM prior to removal of any federal mineral materials. Call the Carlsbad Field Office at (575) 234-5972.

E. WELL PAD SURFACING

Surfacing of the well pad is not required.

If the operator elects to surface the well pad, the surfacing material may be required to be removed at the time of reclamation. The well pad shall be constructed in a manner which creates the smallest possible surface disturbance, consistent with safety and operational needs.

F. EXCLOSURE FENCING (CELLARS & PITS)

Exclosure Fencing
The operator will install and maintain exclosure fencing for all open well cellars to prevent access to public, livestock, and large forms of wildlife before and after drilling operations until the pit is free of fluids and the operator initiates backfilling. (For examples of exclosure fencing design, refer to BLM's Oil and Gas Gold Book, Exclosure Fence Illustrations, Figure 1, Page 18.)

G. ON LEASE ACCESS ROADS

Road Width
The access road shall have a driving surface that creates the smallest possible surface disturbance and does not exceed fourteen (14) feet in width. The maximum width of surface disturbance, when constructing the access road, shall not exceed twenty-five (25) feet.

Surfacing
Surfacing material is not required on the new access road driving surface. If the operator elects to surface the new access road or pad, the surfacing material may be required to be removed at the time of reclamation.

Where possible, no improvements should be made on the unsurfaced access road other than to remove vegetation as necessary, road irregularities, safety issues, or to fill low areas that may sustain standing water.

The Authorized Officer reserves the right to require surfacing of any portion of the access road at any time deemed necessary. Surfacing may be required in the event the road deteriorates, erodes, road traffic increases, or it is determined to be beneficial for future field development. The surfacing depth and type of material will be determined at the time of notification.

Crowning
Crowning shall be done on the access road driving surface. The road crown shall have a grade of approximately 2% (i.e., a 1" crown on a 14' wide road). The road shall conform to Figure 1; cross section and plans for typical road construction.

Ditching
Ditching shall be required on both sides of the road.

Turnouts
Vehicle turnouts shall be constructed on the road. Turnouts shall be intervisible with interval spacing distance less than 1000 feet. Turnouts shall conform to Figure 1; cross section and plans for typical road construction.

Drainage

Drainage control systems shall be constructed on the entire length of road (e.g. ditches, sidehill outsloping and insloping, lead-off ditches, culvert installation, and low water crossings).

A typical lead-off ditch has a minimum depth of 1 foot below and a berm of 6 inches above natural ground level. The berm shall be on the down-slope side of the lead-off ditch.

Cross Section of a Typical Lead-off Ditch

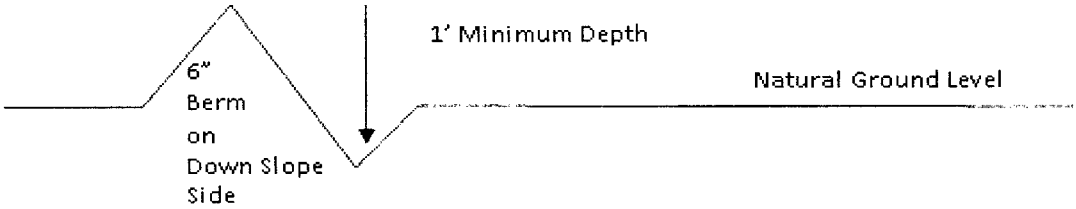

All lead-off ditches shall be graded to drain water with a 1 percent minimum to 3 percent maximum ditch slope. The spacing interval are variable for lead-off ditches and shall be determined according to the formula for spacing intervals of lead-off ditches, but may be amended depending upon existing soil types and centerline road slope (in %);

Formula for Spacing Interval of Lead-off Ditches

Example - On a 4% road slope that is 400 feet long, the water flow shall drain water into a lead-off ditch. Spacing interval shall be determined by the following formula:

400 foot road with 4% road slope: $\frac{400'}{4\%} + 100' = 200'$ lead-off ditch interval

Cattle guards
An appropriately sized cattle guard sufficient to carry out the project shall be installed and maintained at fence/road crossings. Any existing cattle guards on the access road route shall be repaired or replaced if they are damaged or have deteriorated beyond practical use. The operator shall be responsible for the condition of the existing cattle guards that are in place and are utilized during lease operations.

Fence Requirement
Where entry is granted across a fence line, the fence shall be braced and tied off on both sides of the passageway prior to cutting. The operator shall notify the private surface landowner or the grazing allotment holder prior to crossing any fences.

Public Access
Public access on this road shall not be restricted by the operator without specific written approval granted by the Authorized Officer.

Construction Steps

1. Salvage topsoil
2. Construct road
3. Redistribute topsoil
4. Revegetate slopes

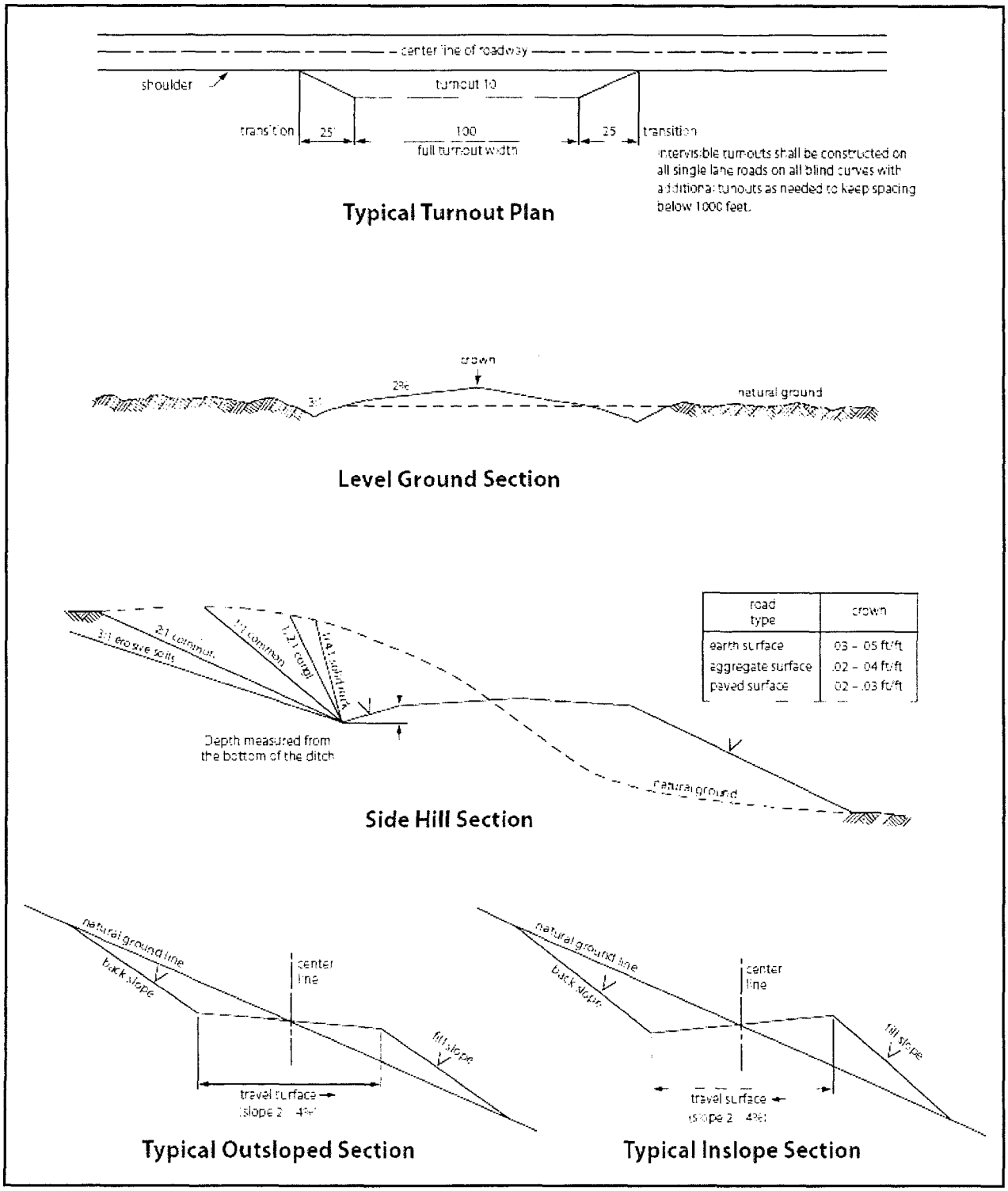

Figure 1. Cross-sections and plans for typical road sections representative of BLM resource or FS local and higher-class roads.

VII. PRODUCTION (POST DRILLING)

A. WELL STRUCTURES & FACILITIES

Placement of Production Facilities
Production facilities should be placed on the well pad to allow for maximum interim recontouring and revegetation of the well location.

Exclosure Netting (Open-top Tanks)
Immediately following active drilling or completion operations, the operator will take actions necessary to prevent wildlife and livestock access, including avian wildlife, to all open-topped tanks that contain or have the potential to contain salinity sufficient to cause harm to wildlife or livestock, hydrocarbons, or Resource Conservation and Recovery Act of 1976-exempt hazardous substances. At a minimum, the operator will net, screen, or cover open-topped tanks to exclude wildlife and livestock and prevent mortality. If the operator uses netting, the operator will cover and secure the open portion of the tank to prevent wildlife entry. The operator will net, screen, or cover the tanks until the operator removes the tanks from the location or the tanks no longer contain substances that could be harmful to wildlife or livestock. Use a maximum netting mesh size of 1 ½ inches. The netting must not be in contact with fluids and must not have holes or gaps.

Chemical and Fuel Secondary Containment and Exclosure Screening
The operator will prevent all hazardous, poisonous, flammable, and toxic substances from coming into contact with soil and water. At a minimum, the operator will install and maintain an impervious secondary containment system for any tank or barrel containing hazardous, poisonous, flammable, or toxic substances sufficient to contain the contents of the tank or barrel and any drips, leaks, and anticipated precipitation. The operator will dispose of fluids within the containment system that do not meet applicable state or U. S. Environmental Protection Agency livestock water standards in accordance with state law; the operator must not drain the fluids to the soil or ground. The operator will design, construct, and maintain all secondary containment systems to prevent wildlife and livestock exposure to harmful substances. At a minimum, the operator will install effective wildlife and livestock exclosure systems such as fencing, netting, expanded metal mesh, lids, and grate covers. Use a maximum netting mesh size of 1 ½ inches.

Open-Vent Exhaust Stack Exclosures
The operator will construct, modify, equip, and maintain all open-vent exhaust stacks on production equipment to prevent birds and bats from entering, and to discourage perching, roosting, and nesting. (*Recommended exclosure structures on open-vent exhaust stacks are in the shape of a cone.*) Production equipment includes, but may not be limited to, tanks, heater-treaters, separators, dehydrators, flare stacks, in-line units, and compressor mufflers.

Containment Structures

Proposed production facilities such as storage tanks and other vessels will have a secondary containment structure that is constructed to hold the capacity of 1.5 times the largest tank, plus freeboard to account for precipitation, unless more stringent protective requirements are deemed necessary.

Painting Requirement
All above-ground structures including meter housing that are not subject to safety requirements shall be painted a flat non-reflective paint color, **Shale Green** from the BLM Standard Environmental Color Chart (CC-001: June 2008).

B. PIPELINES

STANDARD STIPULATIONS FOR SURFACE INSTALLED PIPELINES

A copy of the Grant and attachments, including stipulations, survey plat(s) and/or map(s), shall be on location during construction. BLM personnel may request to review a copy of your permit during construction to ensure compliance with all stipulations.

Holder agrees to comply with the following stipulations to the satisfaction of the Authorized Officer:

1. Holder shall indemnify the United States against any liability for damage to life or property arising from the occupancy or use of public lands under this grant.

2. Holder shall comply with all applicable Federal laws and regulations existing or hereafter enacted or promulgated. In any event, Holder shall comply with the Toxic Substances Control Act of 1976 as amended, 15 USC § 2601 *et seq.* (1982) with regard to any toxic substances that are used, generated by or stored on the right-of-way or on facilities authorized under this right-of-way grant (*see* 40 CFR, Part 702-799 and in particular, provisions on polychlorinated biphenyls, 40 CFR 761.1-761.193). Additionally, any release of toxic substances (leaks, spills, etc.) in excess of the reportable quantity established by 40 CFR, Part 117 shall be reported as required by the Comprehensive Environmental Response, Compensation, and Liability Act, section 102b. A copy of any report required or requested by any Federal agency or State government as a result of a reportable release or spill of any toxic substances shall be furnished to the Authorized Officer concurrent with the filing of the reports to the involved Federal agency or State government.

3. Holder agrees to indemnify the United States against any liability arising from the release of any hazardous substance or hazardous waste (as these terms are defined in the Comprehensive Environmental Response, Compensation and Liability Act of 1980, 42 U.S.C. § 9601, *et seq.* or the Resource Conservation and Recovery Act, 42 U.S.C. 6901, *et seq.*) on the Right-of-Way (unless the release or threatened release is wholly unrelated to activity of the Right-of-Way Holder's activity on the Right-of-Way), or resulting from the activity of the Right-of-Way Holder on the Right-of-Way. This provision applies without regard to whether a release is caused by Holder, its agent, or unrelated third parties.

4. Holder shall be liable for damage or injury to the United States to the extent provided by 43 CFR Sec. 2883.1-4. Holder shall be held to a standard of strict liability for damage or injury to the United States resulting from pipe rupture, fire, or spills caused or substantially aggravated by any of the following within the right-of-way or permit area:

a. Activities of Holder including, but not limited to: construction, operation, maintenance, and termination of the facility;

b. Activities of other parties including, but not limited to:
   (1) Land clearing
   (2) Earth-disturbing and earth-moving work
   (3) Blasting
   (4) Vandalism and sabotage;

c. Acts of God.

The maximum limitation for such strict liability damages shall not exceed one million dollars ($1,000,000) for any one event, and any liability in excess of such amount shall be determined by the ordinary rules of negligence of the jurisdiction in which the damage or injury occurred.

This section shall not impose strict liability for damage or injury resulting primarily from an act of war or from the negligent acts or omissions of the United States.

5. If, during any phase of the construction, operation, maintenance, or termination of the pipeline, any oil, salt water, or other pollutant should be discharged from the pipeline system, impacting Federal lands, the control and total removal, disposal, and cleaning up of such oil, salt water, or other pollutant, wherever found, shall be the responsibility of Holder, regardless of fault. Upon failure of Holder to control, dispose of, or clean up such discharge on or affecting Federal lands, or to repair all damages resulting therefrom, on the Federal lands, the Authorized Officer may take such measures as he/she deems necessary to control and clean up the discharge and restore the area, including, where appropriate, the aquatic environment and fish and wildlife habitats, at the full expense of Holder. Such action by the Authorized Officer shall not relieve Holder of any responsibility as provided herein.

6. All construction and maintenance activity shall be confined to the authorized right-of-way width of **20** feet. If the pipeline route follows an existing road or buried pipeline right-of-way, the surface pipeline shall be installed no farther than 10 feet from the edge of the road or buried pipeline right-of-way. If existing surface pipelines prevent this distance, the proposed surface pipeline shall be installed immediately adjacent to the outer surface pipeline. All construction and maintenance activity shall be confined to existing roads or right-of-ways.

7. No blading or clearing of any vegetation shall be allowed unless approved in writing by the Authorized Officer.

8. Holder shall install the pipeline on the surface in such a manner that will minimize suspension of the pipeline across low areas in the terrain. In hummocky of duney areas, the pipeline shall be "snaked" around hummocks and dunes rather than suspended across these features.

9. The pipeline shall be buried with a minimum of **24** inches under all roads, "two-tracks," and trails. Burial of the pipe will continue for 20 feet on each side of each crossing. The condition of the road, upon completion of construction, shall be returned to at least its former state with no bumps or dips remaining in the road surface.

10. The holder shall minimize disturbance to existing fences and other improvements on public lands. The holder is required to promptly repair improvements to at least their former state. Functional use of these improvements will be maintained at all times. The holder will contact the owner of any improvements prior to disturbing them. When necessary to pass through a fence line, the fence shall be braced on both sides of the passageway prior to cutting of the fence. No permanent gates will be allowed unless approved by the Authorized Officer.

11. In those areas where erosion control structures are required to stabilize soil conditions, the holder will install such structures as are suitable for the specific soil conditions being encountered and which are in accordance with sound resource management practices.

12. Excluding the pipe, all above-ground structures not subject to safety requirement shall be painted by the holder to blend with the natural color of the landscape. The paint used shall be a color which simulates "Standard Environmental Colors" – **Shale Green**, Munsell Soil Color No. 5Y 4/2; designated by the Rocky Mountain Five State Interagency Committee.

13. The pipeline will be identified by signs at the point of origin and completion of the right-of-way and at all road crossings. At a minimum, signs will state the holder's name, BLM serial number, and the product being transported. Signs will be maintained in a legible condition for the life of the pipeline.

14. The holder shall not use the pipeline route as a road for purposes other than routine maintenance as determined necessary by the Authorized Officer in consultation with the holder. The holder will take whatever steps are necessary to ensure that the pipeline route is not used as a roadway.

15. Any cultural and/or paleontological resource (historic or prehistoric site or object) discovered by the holder, or any person working on his behalf, on public or Federal land shall be immediately reported to the authorized officer. Holder shall suspend all operations in the immediate area of such discovery until written authorization to proceed is issued by the authorized officer. An evaluation of the discovery will be made by the authorized officer to determine appropriate cultural or scientific values. The holder will be responsible for the cost of evaluation and any decision as to proper mitigation measures will be made

by the authorized officer after consulting with the holder.

16. The operator shall be held responsible if noxious weeds become established within the areas of operations. Weed control shall be required on the disturbed land where noxious weeds exist, which includes the roads, powerline corridor, and adjacent land affected by the establishment of weeds due to this action. The operator shall consult with the Authorized Officer for acceptable weed control methods, which include following EPA and BLM requirements and policies.

17. Surface pipelines shall be less than or equal to 4 inches and a working pressure below 125 psi.

18. Special Stipulations:

a. **Lesser Prairie-Chicken:** Oil and gas activities will not be allowed in lesser prairie-chicken habitat during the period from March 1st through June 15th annually. During that period, other activities that produce noise or involve human activity, such as the maintenance of oil and gas facilities and pipeline, road, and well pad construction, will be allowed except between 3:00 am and 9:00 am. The 3:00 am to 9:00 am restriction will not apply to normal, around-the-clock operations, such as venting, flaring, or pumping, which do not require a human presence during this period. Normal vehicle use on existing roads will not be restricted.

C. ELECTRIC LINES

STANDARD STIPULATIONS FOR OVERHEAD ELECTRIC DISTRIBUTION LINES

A copy of the grant and attachments, including stipulations, survey plat and/or map, will be on location during construction. BLM personnel may request to you a copy of your permit during construction to ensure compliance with all stipulations.

Holder agrees to comply with the following stipulations to the satisfaction of the Authorized Officer:

1. The holder shall indemnify the United States against any liability for damage to life or property arising from the occupancy or use of public lands under this grant.

2. The holder shall comply with all applicable Federal laws and regulations existing or hereafter enacted or promulgated. In any event, the holder shall comply with the Toxic Substances Control Act of 1976 as amended, 15 USC 2601 et seq. (1982) with regards to any toxic substances that are used, generated by or stored on the right-of-way or on facilities authorized under this right-of-way grant. (See 40 CFR, Part 702-799 and especially, provisions on polychlorinated biphenyls, 40 CFR 761.1-761.193.) Additionally, any release of toxic substances (leaks, spills, etc.) in excess of the

reportable quantity established by 40 CFR, Part 117 shall be reported as required by the Comprehensive Environmental Response, Compensation, and Liability Act, section 102b. A copy of any report required or requested by any Federal agency or State government as a result of a reportable release or spill of any toxic substances shall be furnished to the authorized officer concurrent with the filing of the reports to the involved Federal agency or State government.

3. The holder agrees to indemnify the United States against any liability arising from the release of any hazardous substance or hazardous waste (as these terms are defined in the Comprehensive Environmental Response, Compensation and Liability Act of 1980, 42 U.S.C. 9601, et seq. or the Resource Conservation and Recovery Act, 42 U.S.C. 6901, et seq.) on the Right-of-Way (unless the release or threatened release is wholly unrelated to the Right-of-Way holder's activity on the Right-of-Way), or resulting from the activity of the Right-of-Way holder on the Right-of-Way. This agreement applies without regard to whether a release is caused by the holder, its agent, or unrelated third parties.

4. There will be no clearing or blading of the right-of-way unless otherwise agreed to in writing by the Authorized Officer.

5. Power lines shall be constructed and designed in accordance to standards outlined in "Suggested Practices for Avian Protection on Power lines: The State of the Art in 2006" Edison Electric Institute, APLIC, and the California Energy Commission 2006 . The holder shall assume the burden and expense of proving that pole designs not shown in the above publication deter raptor perching, roosting, and nesting. Such proof shall be provided by a raptor expert approved by the Authorized Officer. The BLM reserves the right to require modification or additions to all powerline structures placed on this right-of-way, should they be necessary to ensure the safety of large perching birds. Such modifications and/or additions shall be made by the holder without liability or expense to the United States.

Raptor deterrence will consist of but not limited to the following: triangle perch discouragers shall be placed on each side of the cross arms and a nonconductive perching deterrence shall be placed on all vertical poles that extend past the cross arms.

6. The holder shall minimize disturbance to existing fences and other improvements on public lands. The holder is required to promptly repair improvements to at least their former state. Functional use of these improvements will be maintained at all times. The holder will contact the owner of any improvements prior to disturbing them. When necessary to pass through a fence line, the fence shall be braced on both sides of the passageway prior to cutting the fence. No permanent gates will be allowed unless approved by the Authorized Officer.

7. The BLM serial number assigned to this authorization shall be posted in a permanent, conspicuous manner where the power line crosses roads and at all serviced facilities. Numbers will be at least two inches high and will be affixed to the pole nearest the road crossing and at the facilities served.

8. Upon cancellation, relinquishment, or expiration of this grant, the holder shall comply with those abandonment procedures as prescribed by the Authorized Officer.

9. All surface structures (poles, lines, transformers, etc.) shall be removed within 180 days of abandonment, relinquishment, or termination of use of the serviced facility or facilities or within 180 days of abandonment, relinquishment, cancellation, or expiration of this grant, whichever comes first. This will not apply where the power line extends service to an active, adjoining facility or facilities.

10. Any cultural and/or paleontological resource (historic or prehistoric site or object) discovered by the holder, or any person working on his behalf, on public or Federal land shall be immediately reported to the Authorized Officer. Holder shall suspend all operations in the immediate area of such discovery until written authorization to proceed is issued by the Authorized Officer. An evaluation of the discovery will be made by the Authorized Officer to determine appropriate actions to prevent the loss of significant cultural or scientific values. The holder will be responsible for the cost of evaluation and any decision as to proper mitigation measures will be made by the Authorized Officer after consulting with the holder.

11. Special Stipulations:
- For reclamation remove poles, lines, transformer, etc. and dispose of properly.
- Fill in any holes from the poles removed.

Timing Limitation Stipulation/Condition of Approval for Lesser Prairie-Chicken: Oil and gas activities including 3-D geophysical exploration, and drilling will not be allowed in lesser prairie-chicken habitat during the period from March 1st through June 15th annually. During that period, other activities that produce noise or involve human activity, such as the maintenance of oil and gas facilities, geophysical exploration other than 3-D operations, and pipeline, road, and well pad construction, will be allowed except between 3:00 am and 9:00 am. The 3:00 am to 9:00 am restriction will not apply to normal, around-the-clock operations, such as venting, flaring, or pumping, which do not require a human presence during this period. Additionally, no new drilling will be allowed within up to 200 meters of leks known at the time of permitting. Normal vehicle use on existing roads will not be restricted. Exhaust noise from pump jack engines must be muffled or otherwise controlled so as not to exceed 75 db measured at 30 ft. from the source of the noise.

VIII. INTERIM RECLAMATION

During the life of the development, all disturbed areas not needed for active support of production operations should undergo interim reclamation in order to minimize the environmental impacts of development on other resources and uses.

Within six (6) months of well completion, operators should work with BLM surface management specialists (Jim Amos: 575-234-5909) to devise the best strategies to reduce

the size of the location. Interim reclamation should allow for remedial well operations, as well as safe and efficient removal of oil and gas.

During reclamation, the removal of caliche is important to increasing the success of revegetating the site. Removed caliche that is free of contaminants may be used for road repairs, fire walls or for building other roads and locations. In order to operate the well or complete workover operations, it may be necessary to drive, park and operate on restored interim vegetation within the previously disturbed area. Disturbing revegetated areas for production or workover operations will be allowed. If there is significant disturbance and loss of vegetation, the area will need to be revegetated. Communicate with the appropriate BLM office for any exceptions/exemptions if needed.

All disturbed areas after they have been satisfactorily prepared need to be reseeded with the seed mixture provided below.

Upon completion of interim reclamation, the operator shall submit a Sundry Notices and Reports on Wells, Subsequent Report of Reclamation (Form 3160-5).

IX. FINAL ABANDONMENT & RECLAMATION

At final abandonment, well locations, production facilities, and access roads must undergo "final" reclamation so that the character and productivity of the land are restored.

Earthwork for final reclamation must be completed within six (6) months of well plugging. All pads, pits, facility locations and roads must be reclaimed to a satisfactory revegetated, safe, and stable condition, unless an agreement is made with the landowner or BLM to keep the road and/or pad intact.

After all disturbed areas have been satisfactorily prepared, these areas need to be revegetated with the seed mixture provided below. Seeding should be accomplished by drilling on the contour whenever practical or by other approved methods. Seeding may need to be repeated until revegetation is successful, as determined by the BLM.

Operators shall contact a BLM surface protection specialist prior to surface abandonment operations for site specific objectives (Jim Amos: 575-234-5909).

Below Ground-level Abandoned Well Marker to avoid raptor perching: Upon the plugging and subsequent abandonment of the well, the well marker will be installed at ground level on a plate containing the pertinent information for the plugged well.

Seed Mixture for LPC Sand/Shinnery Sites

Holder shall seed all disturbed areas with the seed mixture listed below. The seed mixture shall be planted in the amounts specified in pounds of pure live seed (PLS)* per acre. There shall be no primary or secondary noxious weeds in the seed mixture. Seed will be tested and the viability testing of seed shall be done in accordance with State law(s) and within nine (9) months prior to purchase. Commercial seed shall be either certified or registered seed. The seed container shall be tagged in accordance with State law(s) and available for inspection by the Authorized Officer.

Seed will be planted using a drill equipped with a depth regulator to ensure proper depth of planting where drilling is possible. The seed mixture will be evenly and uniformly planted over the disturbed area (smaller/heavier seeds have a tendency to drop the bottom of the drill and are planted first). Holder shall take appropriate measures to ensure this does not occur. Where drilling is not possible, seed will be broadcast and the area shall be raked or chained to cover the seed. When broadcasting the seed, the pounds per acre are to be doubled. Seeding shall be repeated until a satisfactory stand is established as determined by the Authorized Officer. Evaluation of growth may not be made before completion of at least one full growing season after seeding.

Species to be planted in pounds of pure live seed* per acre:

Species	lb/acre
Plains Bristlegrass	5lbs/A
Sand Bluestem	5lbs/A
Little Bluestem	3lbs/A
Big Bluestem	6lbs/A
Plains Coreopsis	2lbs/A
Sand Dropseed	1lbs/A

*Pounds of pure live seed:

Pounds of seed **x** percent purity **x** percent germination = pounds pure live seed

Operator Certification

I hereby certify that I, or someone under my direct supervision, have inspected the drill site and access route proposed herein; that I am familiar with the conditions which currently exist; that I have full knowledge of state and Federal laws applicable to this operation; that the statements made in this APD package are, to the best of my knowledge, true and correct; and that the work associated with the operations proposed herein will be performed in conformity with this APD package and the terms and conditions under which it is approved. I also certify that I, or the company I represent, am responsible for the operations conducted under this application. These statements are subject to the provisions of 18 U.S.C. 1001 for the filing of false statements.

NAME: David Stewart **Signed on:** 03/14/2017

Title: Sr. Regulatory Advisor

Street Address: 5 Greenway Plaza, Suite 110

City: Houston **State:** TX **Zip:** 77046

Phone: (713)366-5716

Email address: David_stewart@oxy.com

Field Representative

Representative Name: Jim Wilson

Street Address: P.O. Box 50250

City: Midland **State:** TX **Zip:** 79710

Phone: (575)631-2442

Email address: jim_wilson@oxy.com

AFMSS

U.S. Department of the Interior
BUREAU OF LAND MANAGEMENT

Application Data Report

10/13/2017

APD ID: 10400011940

Submission Date: 03/14/2017

Highlighted data reflects the most recent changes

Operator Name: OXY USA INCORPORATED

Well Name: PATTON MDP1 17 FEDERAL

Well Number: 4H

Show Final Text

Well Type: OIL WELL

Well Work Type: Drill

Section 1 - General

APD ID: 10400011940

Tie to previous NOS?

Submission Date: 03/14/2017

BLM Office: CARLSBAD

User: David Stewart

Title: Sr. Regulatory Advisor

Federal/Indian APD: FED

Is the first lease penetrated for production Federal or Indian? FED

Lease number: NMNM29234

Lease Acres: 1280

Surface access agreement in place?

Allotted?

Reservation:

Agreement in place? NO

Federal or Indian agreement:

Agreement number:

Agreement name:

Keep application confidential? NO

Permitting Agent? NO

APD Operator: OXY USA INCORPORATED

Operator letter of designation:

Operator Info

Operator Organization Name: OXY USA INCORPORATED

Operator Address: 5 Greenway Plaza, Suite 110

Zip: 77046

Operator PO Box:

Operator City: Houston

State: TX

Operator Phone: (713)366-5716

Operator Internet Address:

Section 2 - Well Information

Well in Master Development Plan? EXISTING

Mater Development Plan name: Sand Dunes Area

Well in Master SUPO? NO

Master SUPO name:

Well in Master Drilling Plan? NO

Master Drilling Plan name:

Well Name: PATTON MDP1 17 FEDERAL

Well Number: 4H

Well API Number:

Field/Pool or Exploratory? Field and Pool

Field Name: COTTON DRAW BONE SPRING

Pool Name: 2ND BONE SPRING

Is the proposed well in an area containing other mineral resources? POTASH

Operator Name: OXY USA INCORPORATED

Well Name: PATTON MDP1 17 FEDERAL **Well Number:** 4H

Describe other minerals:

Is the proposed well in a Helium production area? N **Use Existing Well Pad?** NO **New surface disturbance?**

Type of Well Pad: MULTIPLE WELL **Multiple Well Pad Name:** PATTON MDP1 17 FEDERAL **Number:** 3H

Well Class: HORIZONTAL **Number of Legs:**

Well Work Type: Drill

Well Type: OIL WELL

Describe Well Type:

Well sub-Type: INFILL

Describe sub-type:

Distance to town: 15 Miles **Distance to nearest well:** 30 FT **Distance to lease line:** 100 FT

Reservoir well spacing assigned acres Measurement: 160 Acres

Well plat: PattonMDP1_17Fd4H_C102_03-09-2017.pdf

Well work start Date: 07/25/2018 **Duration:** 25 DAYS

Section 3 - Well Location Table

Survey Type: RECTANGULAR

Describe Survey Type:

Datum: NAD83 **Vertical Datum:** NAVD88

Survey number:

	NS-Foot	NS Indicator	EW-Foot	EW Indicator	Twsp	Range	Section	Aliquot/Lot/Tract	Latitude	Longitude	County	State	Meridian	Lease Type	Lease Number	Elevation	MD	TVD
SHL Leg #1	432	FSL	2292	FWL	24S	31E	8	Aliquot SESW	32.2257806	-103.8009777	EDDY	NEW MEXICO	NEW MEXICO	F	NMNM 29234	3541	0	0
KOP Leg #1	100	FNL	2205	FEL	24S	31E	17	Aliquot NWNE	32.2243198	-103.7984341	EDDY	NEW MEXICO	NEW MEXICO	F	NMNM 89172	-5999	9541	9540
PPP Leg #1	340	FNL	2205	FEL	24S	31E	17	Aliquot NWNE	32.22366	-103.7984344	EDDY	NEW MEXICO	NEW MEXICO	F	NMNM 89172	-6574	11053	10115

Operator Name: OXY USA INCORPORATED

Well Name: PATTON MDP1 17 FEDERAL **Well Number:** 4H

	NS-Foot	NS Indicator	EW-Foot	EW Indicator	Twsp	Range	Section	Aliquot/Lot/Tract	Latitude	Longitude	County	State	Meridian	Lease Type	Lease Number	Elevation	MD	TVD
EXIT Leg #1	340	FSL	2211	FEL	24S	31E	17	Aliquot SWSE	32.2110111	-103.7984404	EDDY	NEW MEXICO	NEW MEXICO	F	NMNM 89172	-6566	15655	10107
BHL Leg #1	190	FSL	2211	FEL	24S	31E	17	Aliquot SWSE	32.2105987	-103.7984406	EDDY	NEW MEXICO	NEW MEXICO	F	NMNM 89172	-6566	15805	10107

APD ID: 10400011940

Submission Date: 03/14/2017

Highlighted data reflects the most recent changes

Operator Name: OXY USA INCORPORATED

Well Name: PATTON MDP1 17 FEDERAL

Well Number: 4H

Show Final Text

Well Type: OIL WELL

Well Work Type: Drill

Section 1 - Geologic Formations

Formation ID	Formation Name	Elevation	True Vertical Depth	Measured Depth	Lithologies	Mineral Resources	Producing Formation
1	RUSTLER	3541	677	677	SHALE,DOLOMITE,ANHYDRITE	USEABLE WATER	No
2	SALADO	2494	1047	1047	SHALE,DOLOMITE,HALITE,ANHYDRITE	OTHER : SALT	No
3	CASTILE	684	2857	2857	ANHYDRITE	OTHER : salt	No
4	LAMAR	-836	4377	4377	LIMESTONE,SANDSTONE,SILTSTONE	NATURAL GAS,OIL,OTHER : BRINE	No
5	BELL CANYON	-869	4410	4410	SANDSTONE,SILTSTONE	NATURAL GAS,OIL,OTHER : BRINE	No
6	CHERRY CANYON	-1632	5173	5174	SANDSTONE,SILTSTONE	NATURAL GAS,OIL,OTHER : BRINE	No
7	BRUSHY CANYON	-2984	6525	6526	LIMESTONE,SANDSTONE,SILTSTONE	NATURAL GAS,OIL,OTHER : BRINE	No
8	BONE SPRING	-4669	8210	8211	LIMESTONE,SANDSTONE,SILTSTONE	NATURAL GAS,OIL	Yes
9	BONE SPRING 1ST	-5682	9223	9224	LIMESTONE,SANDSTONE,SILTSTONE	NATURAL GAS,OIL	Yes
10	BONE SPRING 2ND	-5969	9510	9511	LIMESTONE,SANDSTONE,SILTSTONE	NATURAL GAS,OIL	Yes

Section 2 - Blowout Prevention

Pressure Rating (PSI): 5M

Rating Depth: 10115

Equipment: 13-5/8" 5M Annular, Blind Ram, Double Ram

Requesting Variance? YES

Variance request: Request for the use of a flexible choke line from the BOP to Choke Manifold.

Testing Procedure: BOP/BOPE will be tested by an independent service company to 250 psi low and the high pressure indicated above per Onshore Order 2 requirements. The System may be upgraded to a higher pressure but still tested to the

APD ID: 10400011940 **Submission Date:** 03/14/2017

Operator Name: OXY USA INCORPORATED

Well Name: PATTON MDP1 17 FEDERAL **Well Number:** 4H

Well Type: OIL WELL **Well Work Type:** Drill

Highlighted data reflects the most recent changes

Show Final Text

Section 1 - Geologic Formations

Formation ID	Formation Name	Elevation	True Vertical Depth	Measured Depth	Lithologies	Mineral Resources	Producing Formation
1	RUSTLER	3541	677	677	SHALE,DOLOMITE,ANHYDRITE	USEABLE WATER	No
2	SALADO	2494	1047	1047	SHALE,DOLOMITE,HALITE,ANHYDRITE	OTHER : SALT	No
3	CASTILE	684	2857	2857	ANHYDRITE	OTHER : salt	No
4	LAMAR	-836	4377	4377	LIMESTONE,SANDSTONE,SILTSTONE	NATURAL GAS,OIL,OTHER : BRINE	No
5	BELL CANYON	-869	4410	4410	SANDSTONE,SILTSTONE	NATURAL GAS,OIL,OTHER : BRINE	No
6	CHERRY CANYON	-1632	5173	5174	SANDSTONE,SILTSTONE	NATURAL GAS,OIL,OTHER : BRINE	No
7	BRUSHY CANYON	-2984	6525	6526	LIMESTONE,SANDSTONE,SILTSTONE	NATURAL GAS,OIL,OTHER : BRINE	No
8	BONE SPRING	-4669	8210	8211	LIMESTONE,SANDSTONE,SILTSTONE	NATURAL GAS,OIL	Yes
9	BONE SPRING 1ST	-5682	9223	9224	LIMESTONE,SANDSTONE,SILTSTONE	NATURAL GAS,OIL	Yes
10	BONE SPRING 2ND	-5969	9510	9511	LIMESTONE,SANDSTONE,SILTSTONE	NATURAL GAS,OIL	Yes

Section 2 - Blowout Prevention

Pressure Rating (PSI): 5M **Rating Depth:** 10115

Equipment: 13-5/8" 5M Annular, Blind Ram, Double Ram

Requesting Variance? YES

Variance request: Request for the use of a flexible choke line from the BOP to Choke Manifold.

Testing Procedure: BOP/BOPE will be tested by an independent service company to 250 psi low and the high pressure indicated above per Onshore Order 2 requirements. The System may be upgraded to a higher pressure but still tested to the

working pressure listed in the table above. If the system is upgraded all the components installed will be functional and tested. Pipe rams will be operationally checked each 24 hour period. Blind rams will be operationally checked on each trip out of the hole. These checks will be noted on the daily tour sheets. Other accessories to the BOP equipment will include a Kelly cock and floor safety valve (inside BOP) and choke lines and choke manifold. A multibowl wellhead or a unionized multibowl wellhead system will be employed. The wellhead and connection to the BOPE will meet all API 6A requirements. The BOP will be tested per Onshore Order #2 after installation on the surface casing which will cover testing requirements for a maximum of 30 days. If any seal subject to test pressure is broken the system will be tested. We will test the flange connection of the wellhead with a test port that is directly in the flange. We are proposing that we will run the wellhead through the rotary prior to cementing surface casing as discussed with the BLM on October 8, 2015.

Choke Diagram Attachment:

PattonMDP1_17Fd4H_ChkManifold_5M__03-09-2017.pdf

BOP Diagram Attachment:

PattonMDP1-17Fd4H_FlexHoseCert_03-01-2017.pdf

PattonMDP1_17Fd4H_BOP_5M13_58_Amd_20170914151655.pdf

Section 3 - Casing

Casing ID	String Type	Hole Size	Csg Size	Condition	Standard	Tapered String	Top Set MD	Bottom Set MD	Top Set TVD	Bottom Set TVD	Top Set MSL	Bottom Set MSL	Calculated casing length MD	Grade	Weight	Joint Type	Collapse SF	Burst SF	Joint SF Type	Joint SF	Body SF Type	Body SF
1	SURFACE	17.5	13.375	NEW	API	N	0	727	0	727			727	J-55	54.5	BUTT	6.23	1.33	BUOY	2.61	BUOY	2.44
2	INTERMEDIATE	12.25	9.625	NEW	API	N	0	4427	0	4427			4427	J-55	36	BUTT	2.32	1.4	BUOY	2.27	BUOY	1.99
3	PRODUCTION	8.5	5.5	NEW	API	N	0	15805	0	10107			15805	P-110	20	OTHER - DQX	2.09	1.28	BUOY	2.39	BUOY	2.21

Casing Attachments

Casing Attachments

Casing ID: 1 **String Type:** SURFACE

Inspection Document:

Spec Document:

Tapered String Spec:

Casing Design Assumptions and Worksheet(s):

PattonMDP1-17Fd4H_CsgCriteria_03-01-2017.pdf

Casing ID: 2 **String Type:** INTERMEDIATE

Inspection Document:

Spec Document:

Tapered String Spec:

Casing Design Assumptions and Worksheet(s):

PattonMDP1-17Fd4H_CsgCriteria_03-01-2017.pdf

Casing ID: 3 **String Type:** PRODUCTION

Inspection Document:

Spec Document:

Tapered String Spec:

Casing Design Assumptions and Worksheet(s):

PattonMDP1-17Fd4H_CsgCriteria_03-01-2017.pdf

PattonMDP1_17Fd4H_5.5_20_P110DQX_20170914151848.pdf

Section 4 - Cement

Operator Name: OXY USA INCORPORATED

Well Name: PATTON MDP1 17 FEDERAL **Well Number:** 4H

String Type	Lead/Tail	Stage Tool Depth	Top MD	Bottom MD	Quantity(sx)	Yield	Density	Cu Ft	Excess%	Cement type	Additives
SURFACE	Lead		0	727	473	1.68	14.2	795	50	Class C Cement	Accelerator
INTERMEDIATE	Lead		0	3927	1160	1.74	12.9	2018	75	Pozzolan Cement	Retarder
INTERMEDIATE	Tail		3927	4427	156	1.33	14.8	207	20	Class C Cement	Accelerator, Retarder
PRODUCTION	Lead		3927	9041	650	3.06	10.2	1989	75	Class C Cement	Retarder
PRODUCTION	Tail		9041	15805	1096	1.63	13.2	1786	15	Class H Cement	Retarder, Dispersant, Salt

Section 5 - Circulating Medium

Mud System Type: Closed

Will an air or gas system be Used? NO

Description of the equipment for the circulating system in accordance with Onshore Order #2:

Diagram of the equipment for the circulating system in accordance with Onshore Order #2:

Describe what will be on location to control well or mitigate other conditions: Sufficient mud materials to maintain mud properties and meet minimum lost circulation and weight increase requirements. The following is a general list of products: Barite, Bentonite, Gypsum, Lime, Soda Ash, Caustic Soda, Nut Plug, Cedar Fiber, Cotton Seed Hulls, Drilling Paper, Salt Water Clay, CaCl2. OXY proposes to drill out the 13-3/8" surface casing shoe with a saturated brine system from 727-4427', which is the base of the salt system. At this point we will swap fluid systems to a high viscosity mixed metal hydroxide system. We will drill with this system to the KOP @ 9541'.
Describe the mud monitoring system utilized: PVT/MD Totco/Visual Monitoring

Circulating Medium Table

Top Depth	Bottom Depth	Mud Type	Min Weight (lbs/gal)	Max Weight (lbs/gal)	Density (lbs/cu ft)	Gel Strength (lbs/100 sqft)	PH	Viscosity (CP)	Salinity (ppm)	Filtration (cc)	Additional Characteristics
727	4427	OTHER : Brine	9.8	10							

Operator Name: OXY USA INCORPORATED

Well Name: PATTON MDP1 17 FEDERAL **Well Number:** 4H

Top Depth	Bottom Depth	Mud Type	Min Weight (lbs/gal)	Max Weight (lbs/gal)	Density (lbs/cu ft)	Gel Strength (lbs/100 sqft)	PH	Viscosity (CP)	Salinity (ppm)	Filtration (cc)	Additional Characteristics
0	727	WATER-BASED MUD	8.4	8.6							
4427	9541	WATER-BASED MUD	8.8	9.6							
9541	15805	OIL-BASED MUD	8.8	9.6							

Section 6 - Test, Logging, Coring

List of production tests including testing procedures, equipment and safety measures:

GR from TD to surface (horizontal well – vertical portion of hole). Mud Log from intermediate casing shoe to TD.

List of open and cased hole logs run in the well:

GR,MUDLOG

Coring operation description for the well:

No coring is planned at this time.

Section 7 - Pressure

Anticipated Bottom Hole Pressure: 5050 **Anticipated Surface Pressure:** 2824.7

Anticipated Bottom Hole Temperature(F): 161

Anticipated abnormal pressures, temperatures, or potential geologic hazards? NO

Describe:

Contingency Plans geoharzards description:

Contingency Plans geohazards attachment:

Hydrogen Sulfide drilling operations plan required? YES

Hydrogen sulfide drilling operations plan:

PattonMDP1-17Fd4H_H2S1_03-01-2017.pdf
PattonMDP1-17Fd4H_H2S2_03-01-2017.pdf

Section 8 - Other Information

Proposed horizontal/directional/multi-lateral plan submission:

PattonMDP1-17Fd4H_DirectPlan_03-01-2017.pdf

PattonMDP1-17Fd4H_DirectPlot_03-01-2017.pdf

Other proposed operations facets description:

Well will be drilled with a walking/skidding operation. Plan to drill the four well pad in batch by section: all surface sections, intermediate sections and production sections. The wellhead will be secured with a night cap whenever the rig is not over the well.

OXY requests the option to set casing shallower yet still below the salts if losses or hole conditions require this. Cement volumes may be adjusted if casing is set shallower and a DV tool may be run in case hole conditions merit pumping a second stage cement job to comply with permitted top of cement. If cement circulated to surface during first stage we will drop a cancelation cone and not pump the second stage.

OXY requests the option to contract a Surface Rig to drill, set surface casing, and cement for this well. If the timing between rigs is such that OXY would not be able to preset surface, the Primary Rig will MIRU and drill the well in its entirety per the APD. See attached for additional spudder rig information.

Other proposed operations facets attachment:

PattonMDP1_17Fd4H_SpudRigData_20170908140750.pdf

PattonMDP1_17Fd4H_DrillPlanAmd_20170914152337.pdf

Other Variance attachment:

5M Choke Panel

Green
Indicates Open

Red Indicates
Closed

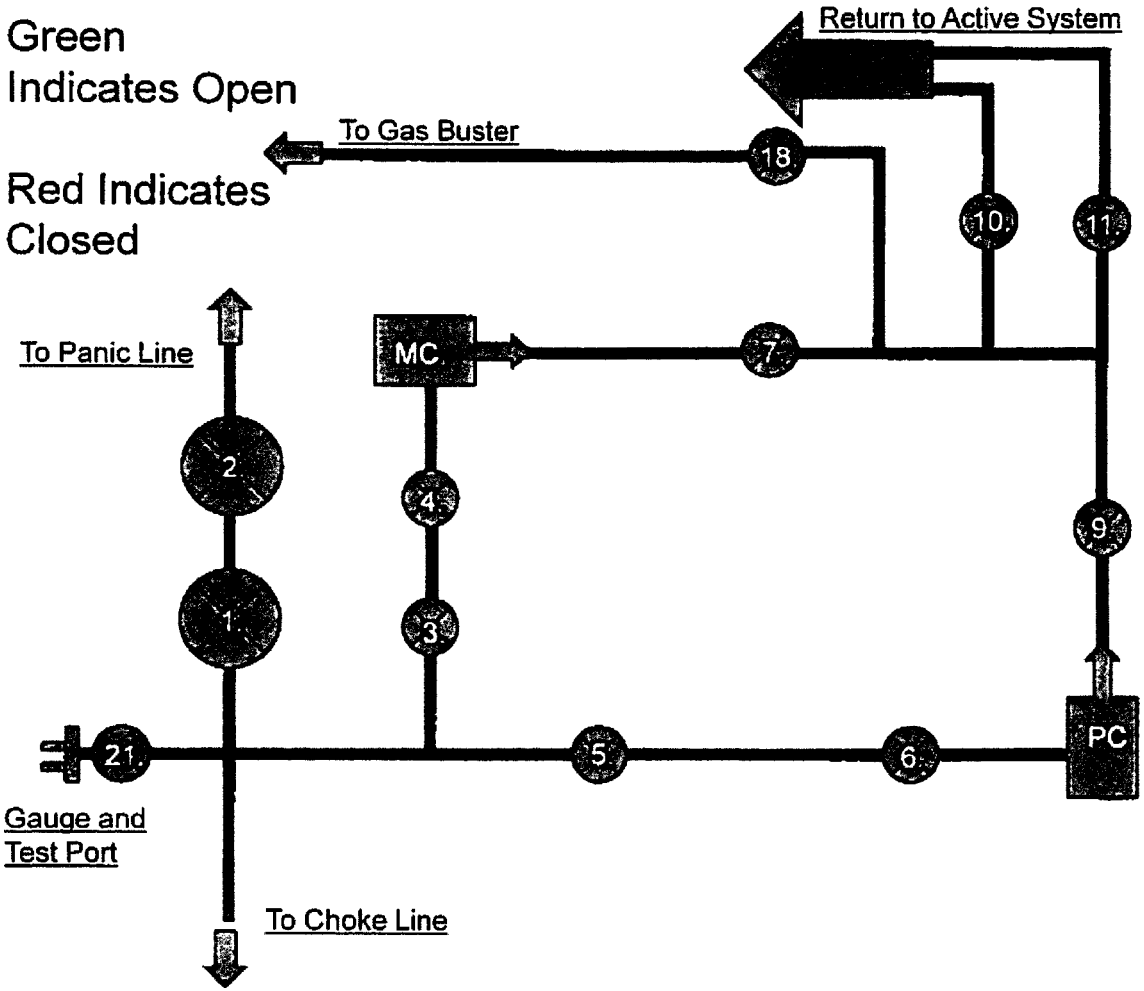

1. 4" Choke Manifold Valve
2. 4" Choke Manifold Valve
3. 3" Choke Manifold Valve
4. 3" Choke Manifold Valve
5. 3" Choke Manifold Valve
6. 3" Choke Manifold Valve
7. 3" Choke Manifold Valve
8. PC – Power Choke
9. 3" Choke Manifold Valve
10. 3" Choke Manifold Valve
11. Choke Manifold Valve
12. MC – Manual Choke

18. Choke Manifold Valve

21. Vertical Choke Manifold Valve

***All Valves 3" minimum**

10M REMOTE KILL LINE SCHEMATIC

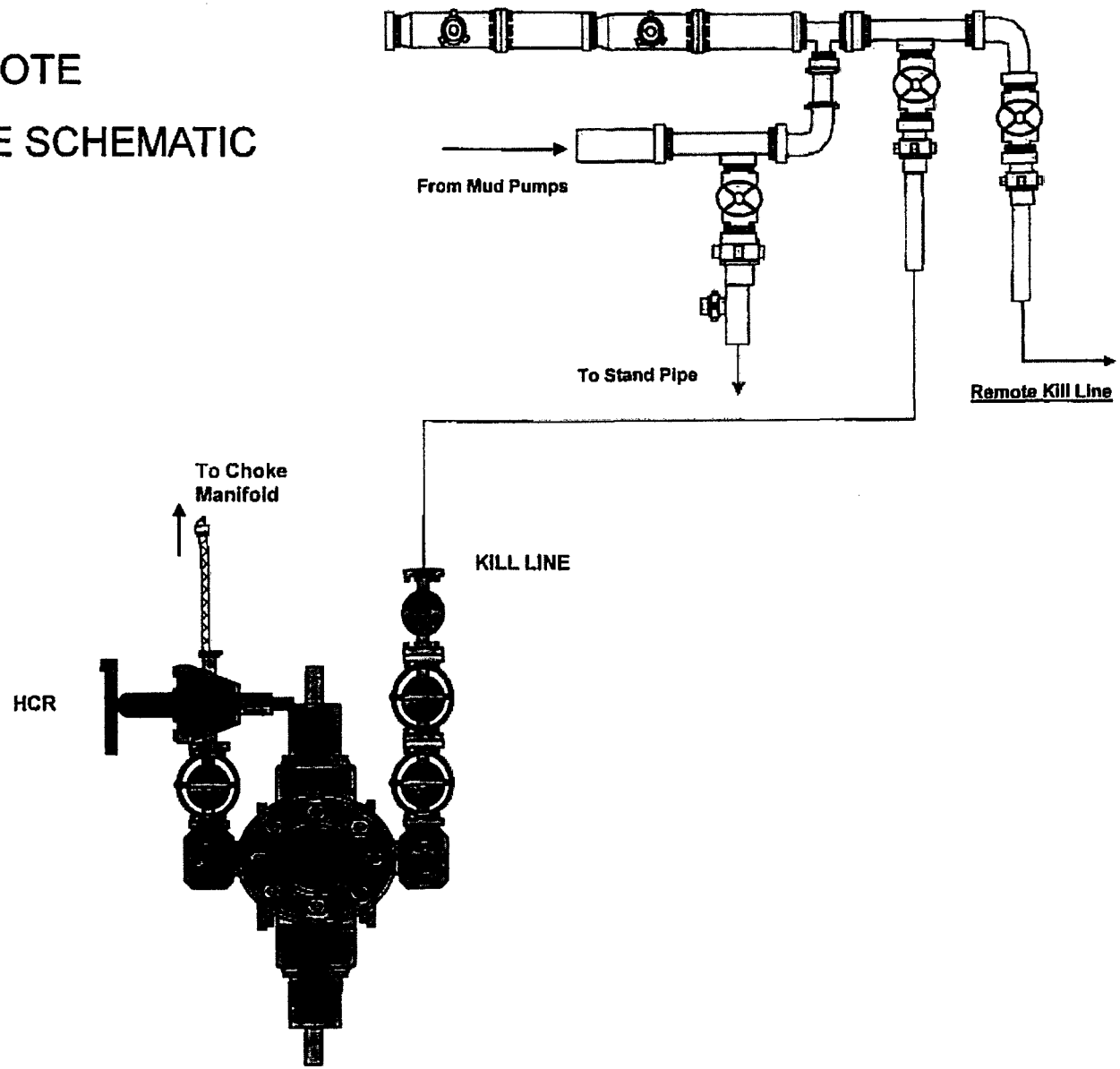

Gas Separator Routing
Flex III Rigs

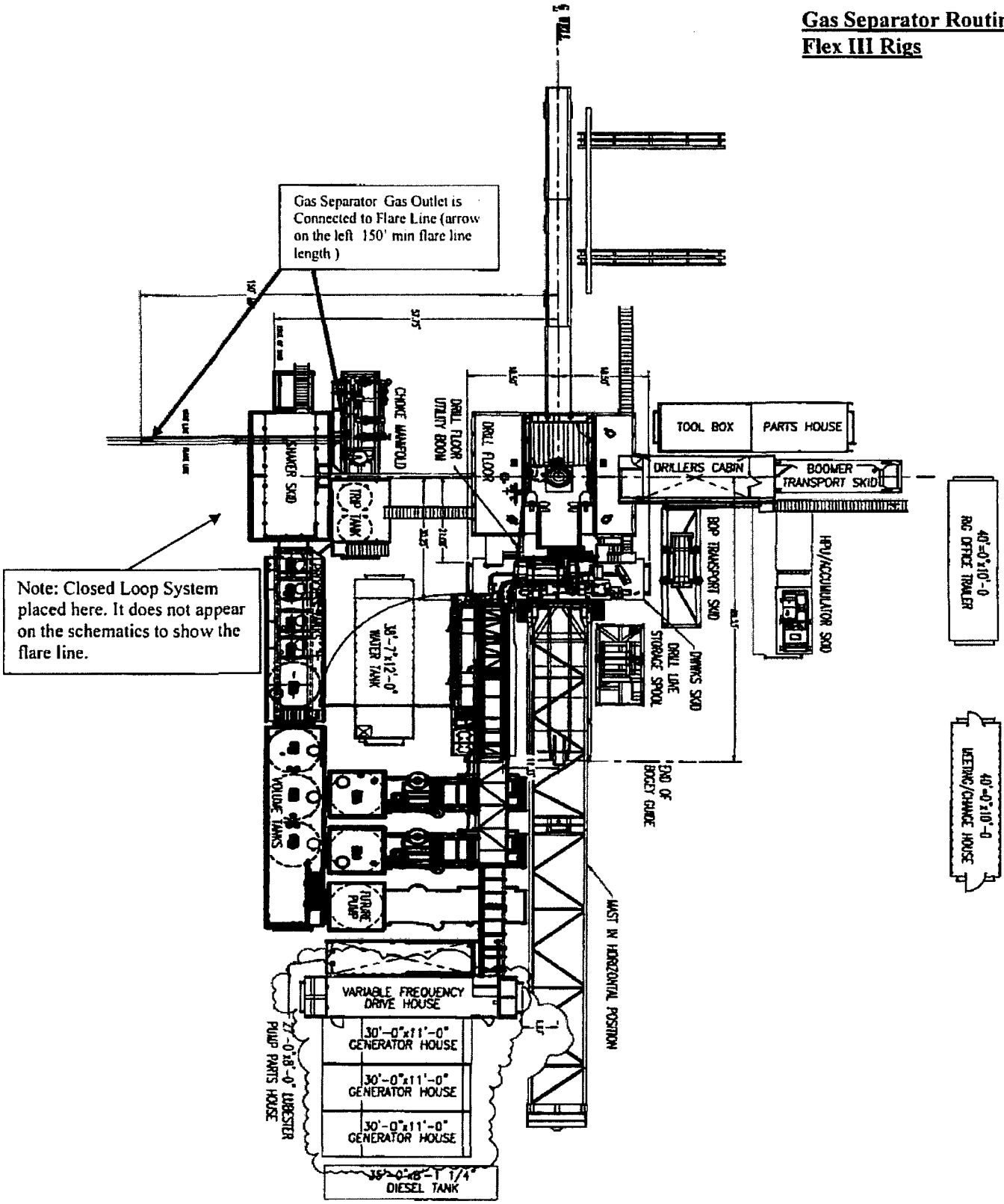

Choke Manifold – Gas Separator (Top View)

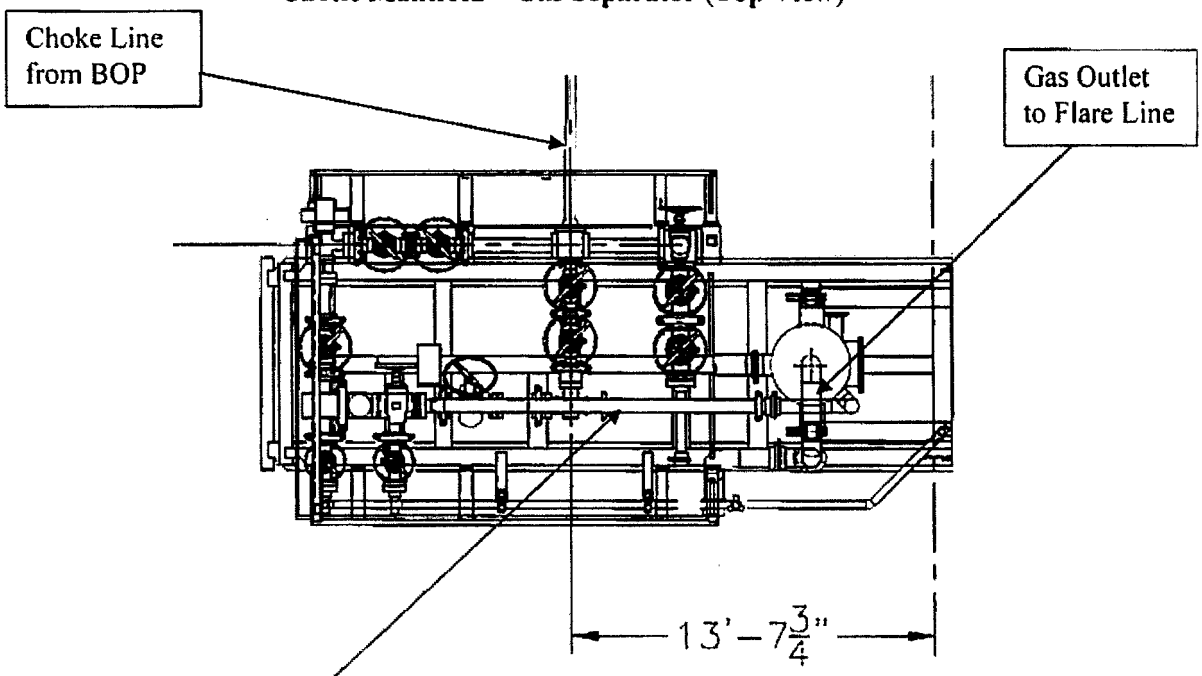

Choke Manifold – Gas Separator (Side View)

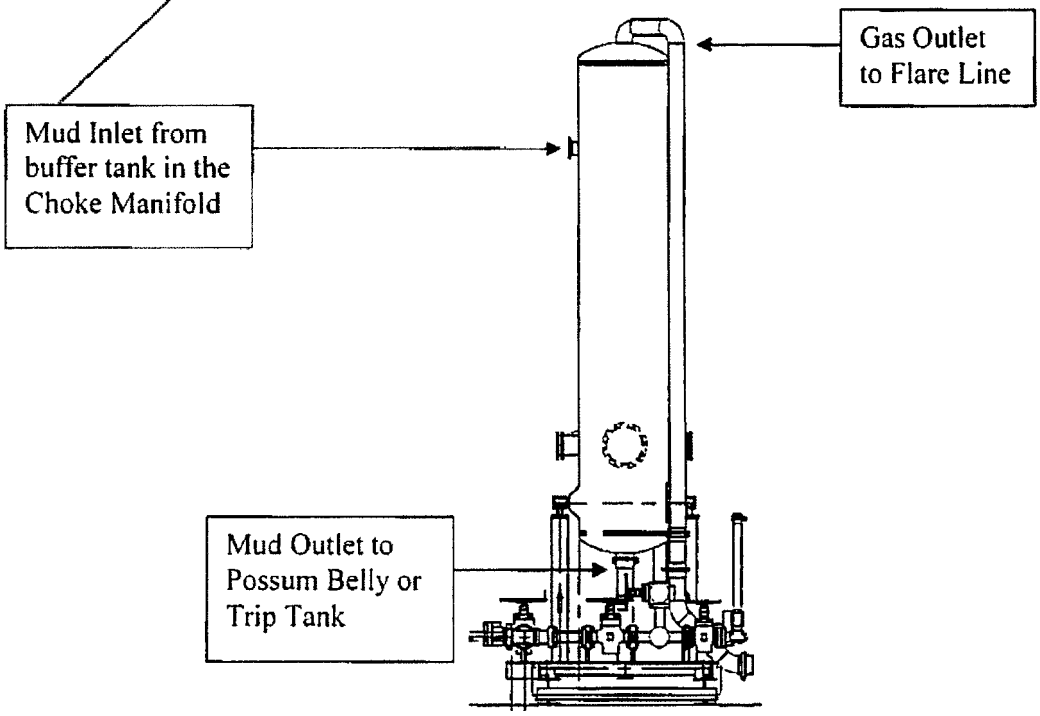

Coflex Hose Certification

FH-1

Continental CONTITECH

Fluid Technology

Quality Document

QUALITY CONTROL INSPECTION AND TEST CERTIFICATE			CERT. N°: 746
PURCHASER: Phoenix Beattie Co.			P.O. N°: 002491
CONTITECH ORDER N°: 412638	HOSE TYPE: 3" ID	Choke and Kill Hose	
HOSE SERIAL N°: 52777	NOMINAL / ACTUAL LENGTH: 10,67 m		
W.P. 68,96 MPa 10000 psi	T.P. 103,4 MPa 15000 psi	Duration: 60 -- min.	

Pressure test with water at ambient temperature

See attachment. (1 page)

↑ 10 mm = 10 Min.

→ 10 mm = 25 MPa

COUPLINGS

Type	Serial N°	Quality	Heat N°
3" coupling with	917 913	AISI 4130	T7998A
4 1/16" Flange end		AISI 4130	26984

INFOCHIP INSTALLED

API Spec 16 C
Temperature rate:"B"

All metal parts are flawless

WE CERTIFY THAT THE ABOVE HOSE HAS BEEN MANUFACTURED IN ACCORDANCE WITH THE TERMS OF THE ORDER AND PRESSURE TESTED AS ABOVE WITH SATISFACTORY RESULT.

Date:	Inspector	Quality Control
04. April. 2008		ContiTech Rubber Industrial Kft. Quality Control Dept. (1)

FH-2

Coflex Hose Certification

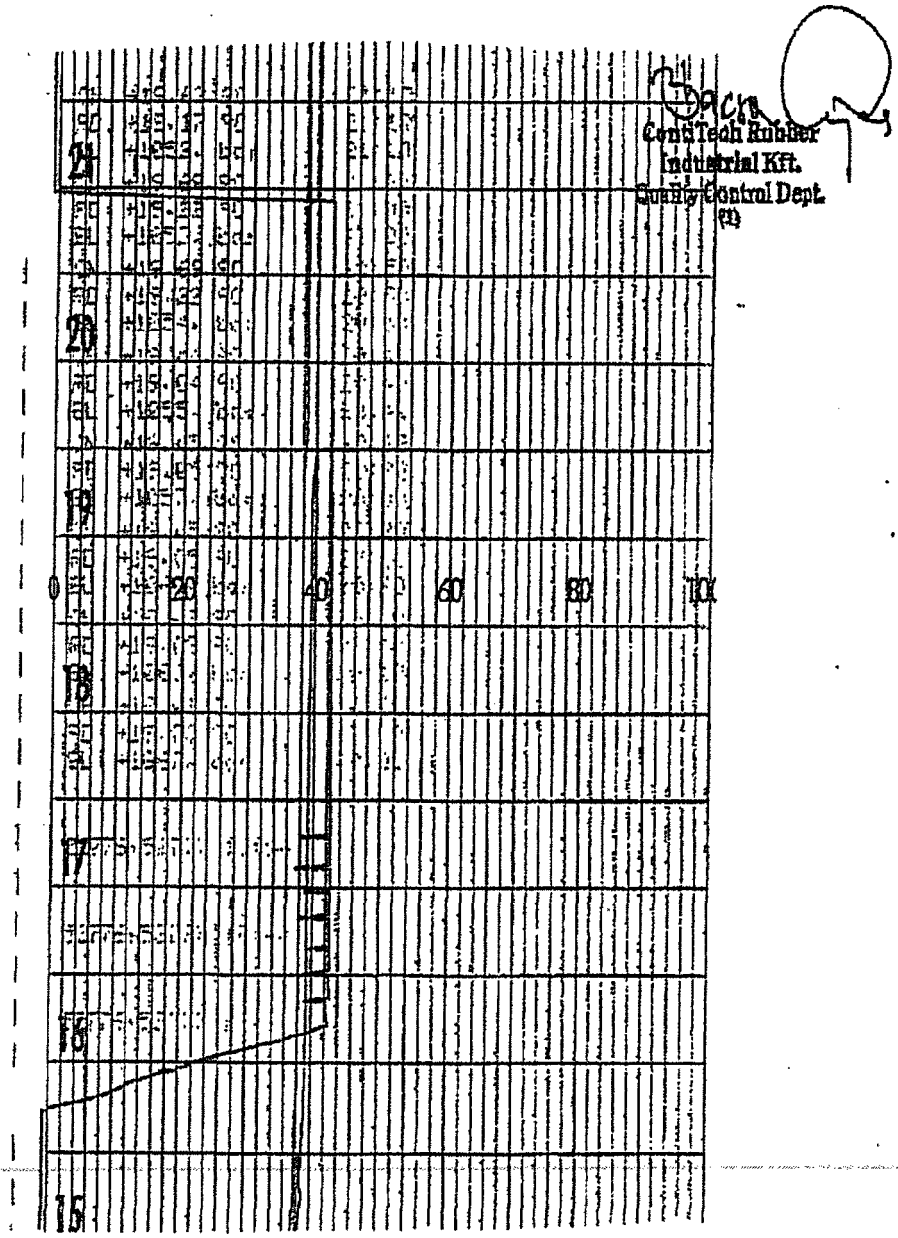

FH-3

Coflex Hose Certification

Form No 100/12

PHOENIX Beattie

Phoenix Beattie Corp
11535 Brittmoore Park Drive
Houston, TX 77041
Tel: (832) 327-0141
Fax: (832) 327-0148
E-mail mail@phoenixbeattie.com
www.phoenixbeattie.com

Delivery Note

Customer Order Number	370-369-001	Delivery Note Number	003078	Page	1

Customer / Invoice Address
HELMERICH & PAYNE INT'L DRILLING CO
1437 SOUTH BOULDER
TULSA, OK
74119

Delivery / Address
HELMERICH & PAYNE IDC
ATTN: JOE STEPHENSON - RIG 370
13609 INDUSTRIAL ROAD
HOUSTON, TX
77015

Customer Acc No	Phoenix Beattie Contract Manager	Phoenix Beattie Reference	Date
H01	JJL	006330	05/23/2008

Item No	Beattie Part Number / Description	Qty Ordered	Qty Sent	Qty To Follow
1	HP10CK3A-35-4F1 3" 10K 16C C&K HOSE x 35ft OAL CW 4.1/16" API SPEC FLANGE E/ End 1: 4.1/16" 10Kpsi API Spec 6A Type 6BX Flange End 2: 4.1/16" 10Kpsi API Spec 6A Type 6BX Flange c/w BX155 Standard ring groove at each end Suitable for H2S Service Working pressure: 10,000psi Test pressure: 15,000psi Standard: API 16C Full specification Armor Guarding: Included Fire Rating: Not Included Temperature rating: -20 Deg C to +100 Deg C	1	1	0
2	SECK3-HPF3 LIFTING & SAFETY EQUIPMENT TO SUIT HP10CK3-35-F1 2 x 160mm ID Safety Clamps 2 x 244mm ID Lifting Collars & element C's 2 x 7ft Stainless Steel wire rope 3/4" OD 4 x 7.75t Shackles	1	1	0
3	SC725-200CS SAFETY CLAMP 200MM 7.25T C/S GALVANISED	1	1	0

Continued...

All goods remain the property of Phoenix Beattie until paid for in full. Any damage or shortage on this delivery must be advised within 5 days. Returns may be subject to a handling charge.

FH-4

Coflex Hose Certification

Form No 100/12

PHOENIX Beattie

Phoenix Beattie Corp
11535 Brittmoore Park Drive
Houston, TX 77041
Tel: (832) 327-0141
Fax: (832) 327-0148
E-mail sales@phoenixbeattie.com
www.phoenixbeattie.com

Delivery Note

Customer Order Number	370-369-001	Delivery Note Number	003078	Page	2

Customer / Invoice Address
HELMERICH & PAYNE INT'L DRILLING CO
1437 SOUTH BOULDER
TULSA, OK
74119

Delivery / Address
HELMERICH & PAYNE IDC
ATTN: JOE STEPHENSON - RIG 370
13609 INDUSTRIAL ROAD
HOUSTON, TX
77015

Customer Acc No	Phoenix Beattie Contract Manager	Phoenix Beattie Reference	Date
H01	JJL	006330	05/23/2008

Item No	Beattie Part Number / Description	Qty Ordered	Qty Sent	Qty To Follow
4	SC725-132CS SAFETY CLAMP 132MM 7.25T C/S GALVANIZED C/W BOLTS	1	1	0
5	00CERT-HYDRO HYDROSTATIC PRESSURE TEST CERTIFICATE	1	1	0
6	00CERT-LOAD LOAD TEST CERTIFICATES	1	1	0
7	00FREIGHT INBOUND / OUTBOUND FREIGHT PRE-PAY & ADD TO FINAL INVOICE NOTE: MATERIAL MUST BE ACCOMPANIED BY PAPERWORK INCLUDING THE PURCHASE ORDER, RIG NUMBER TO ENSURE PROPER PAYMENT	1	1	0

Phoenix Beattie Inspection Signature : _____

Received In Good Condition : Signature _____

Print Name _____

Date _____

All goods remain the property of Phoenix Beattie until paid for in full. Any damage or shortage on this delivery must be advised within 5 days. Returns may be subject to a handling charge.

PHOENIX Beattie

Material Identification Certificate

PA No	006330	Client	HELMERICH & PAYNE INT'L DRILLING	Client Ref	370-369-001	Page	1

Part No	Description	Material Desc	Material Spec	Qty	WO No	Batch No	Test Cert No	Bin No	Drg No	Issue No
HP10CX3A-35-4F1	3" 10K 16C CAK HOSE x 35ft OAL			1	2491	52777/H884		WATER		
SECK3-HPF3	LIFTING & SAFETY EQUIPMENT TO			1	2440	002440		N/STK		
SC725-200CS	SAFETY CLAMP 200MM 7.25T	CARBON STEEL		1	2519	H665		22C		
SC725-132CS	SAFETY CLAMP 132MM 7.25T	CARBON STEEL		1	2242	H139		22		

We hereby certify that these goods have been inspected by our Quality Management System, and to the best of our knowledge are found to conform to relevant Industry standards within the requirements of the purchase order as issued to Phoenix Beattie Corporation.

05/23/06

Coflex Hose Certification

FH-5

Continental CONTITECH

Fluid Technology

Quality Document

FH-6

CERTIFICATE OF CONFORMITY

Supplier : CONTITECH RUBBER INDUSTRIAL KFT.
Equipment : 6 pcs. Choke and Kill Hose with installed couplings
Type : **3" x 10,67 m WP: 10000 psi**
Supplier File Number : 412638
Date of Shipment : April. 2008
Customer : Phoenix Beattie Co.
Customer P.o. : 002491
Referenced Standards / Codes / Specifications : API Spec 16 C
Serial No.: 52754,52755,52776,52777,52778,52782

STATEMENT OF CONFORMITY

We hereby certify that the above items/equipment supplied by us are in conformity with the terms, conditions and specifications of the above Purchaser Order and that these items/equipment were fabricated inspected and tested in accordance with the referenced standards, codes and specifications and meet the relevant acceptance criteria and design requirements.

COUNTRY OF ORIGIN HUNGARY/EU

Signed : .....

ContiTech Rubber Industrial Kft. Quality Control Dept. (1)

Date: 04. April. 2008

Position: Q.C. Manager

5M BOP Stack

Mud Cross Valves:

5. 5M Check Valve
6. Outside 5M Kill Line Valve
7. Inside 5M Kill Line
8. Outside 5M Kill Line Valve
9. 5M HCR Valve

*Minimum ID = 2-1/16" on Kill Line side and 3" minimum ID on choke line side

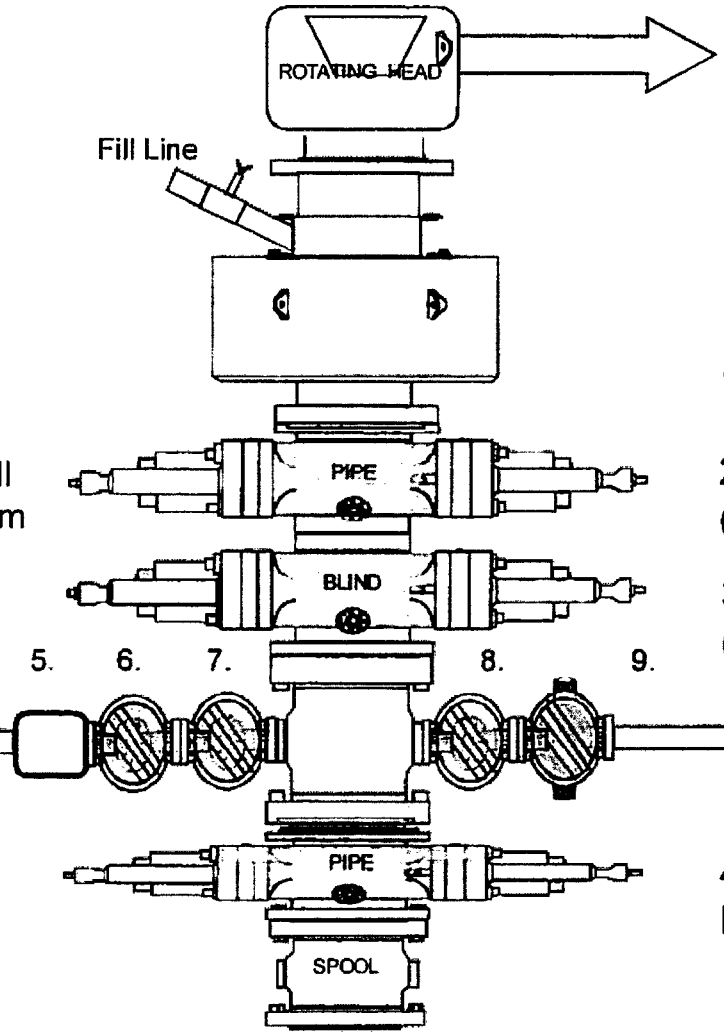

To Kill Line

To Co-Flex and Choke Manifold

1. 5000 psi Annular (13-5/8" ID)

2. 5,000 psi Upper Pipe Ram (13-5/8" ID)

3. 5,000 psi Blind Ram (13-5/8" ID)

4. 5,000 psi Lower Pipe Ram (13-5/8" ID)

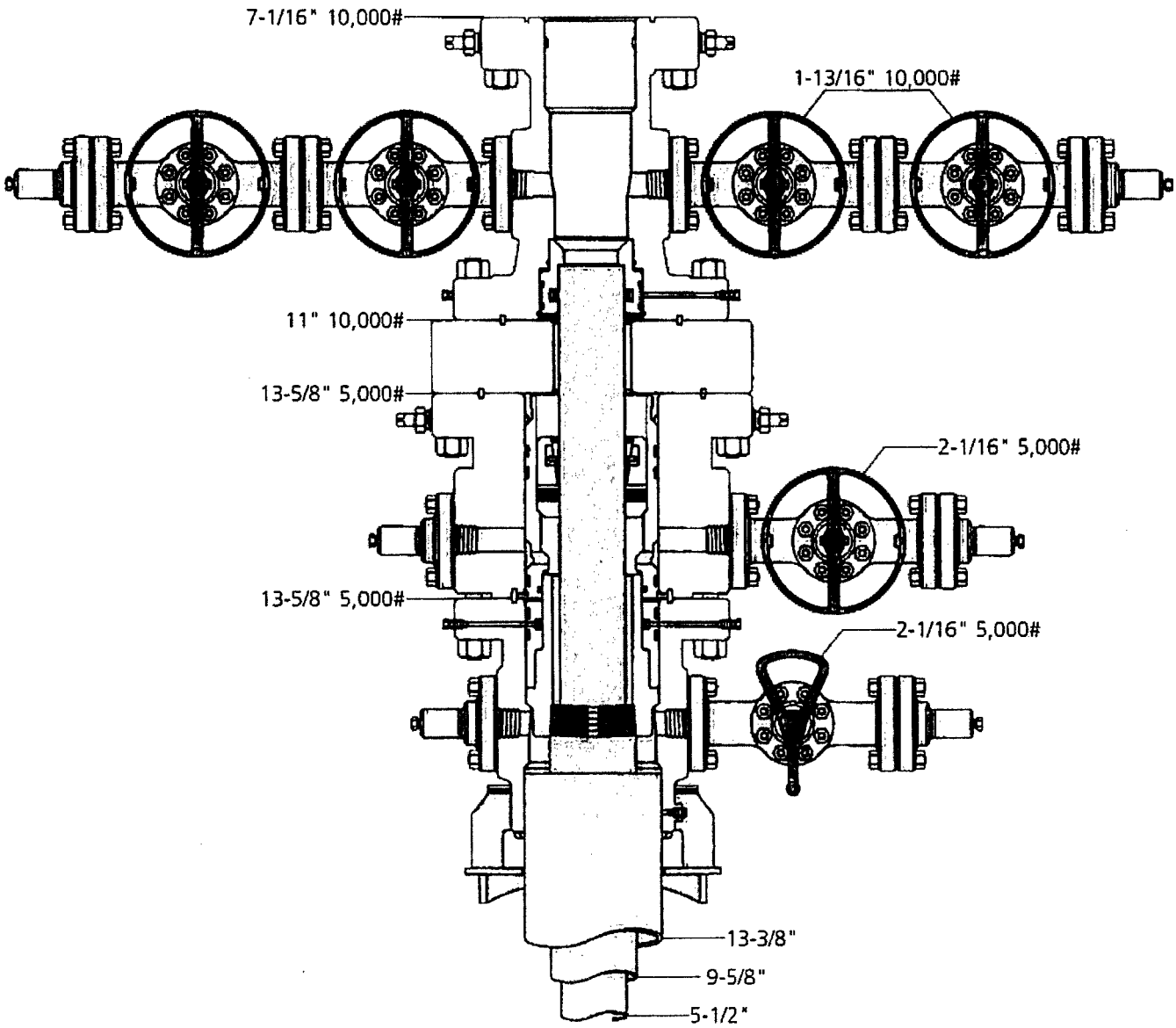

OXY

13" 5K MBS SL2 Wellhead

CAMERON
A Schlumberger Company

Jeanette	7-12-16	#	J-9786-4

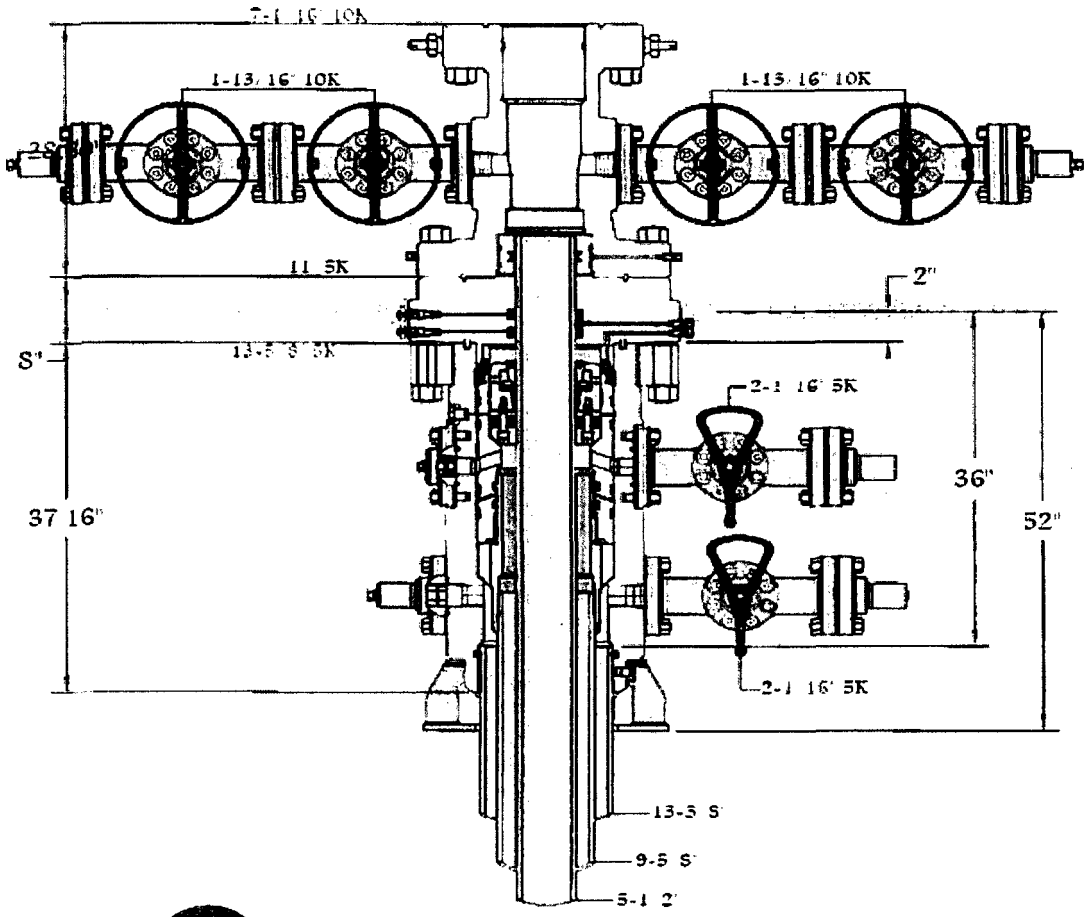

13-5/8" 5K MN-DS

CAMERON
A Schlumberger Company

Brandon	5-10-17	#	1505172

OXY's Minimum Design Criteria

Burst, Collapse, and Tensile SF are calculated using Landmark's Stress Check (Casing Design) software. A sundry will be requested if any lesser grade or different size casing is substituted.

1) Casing Design Assumptions

a) Burst Loads

CSG Test (Surface)

- Internal: Displacement fluid + pressure required to comply with regulatory casing test pressures. This will comply with both Onshore Oil and Gas Order No. 2 and 19.15.16 of the OCD Rules.
- External: Pore pressure in open hole.

CSG Test (Intermediate)

- Internal: Displacement fluid + pressure required to comply with regulatory casing test pressures. This will comply with both Onshore Oil and Gas Order No. 2 and 19.15.16 of the OCD Rules.
- External: Mud Weight to TOC, cement mix water gradient (8.4 ppg) below TOC, and pore pressure in open hole.

CSG Test (Production)

- Internal:
  - For Drilling: Displacement fluid + pressure required to comply with regulatory casing test pressures. This will comply with both Onshore Oil and Gas Order No. 2 and 19.15.16 of the OCD Rules.
  - For Production: The design pressure test should be the greater of (1) the planned test pressure prior to stimulation down the casing. (2) the regulatory test pressure, and (3) the expected gas lift system pressure. The design test fluid should be the fluid associated with pressure test having the greatest pressure.
- External:
  - For Drilling: Mud Weight to TOC, cement mix water gradient (8.4 ppg) below TOC, and pore pressure in open hole.
  - For Production: Mud base-fluid density to TOC, cement mix water gradient (8.4 ppg) below TOC, and pore pressure in open hole.

Gas Column (Surface)

- Internal: Assumes a full column of gas in the casing with a Gas/Oil Gradient of 0.1 psi/ft in the absence of better information. It is limited to the controlling pressure based on the fracture pressure at the shoe or the maximum expected pore pressure within the next drilling interval, whichever results in a lower surface pressure.
- External: Fluid gradient below TOC, pore pressure from the TOC to the Intermediate CSG shoe (if applicable), and MW of the drilling mud that was in the hole when the CSG was run from Intermediate CSG shoe to surface.

Bullheading (Surface / Intermediate)

- Internal: The string must be designed to withstand a pressure profile based on the fracture pressure at the casing shoe with a column of water above the shoe plus an additional surface pressure (in psi) of 0.02 X MD of the shoe to account for pumping friction pressure.
- External: Mud weight to TOC, cement mix water gradient (8.4 ppg) below TOC, and pore pressure in open hole.

Gas Kick (Intermediate)

- The string must be designed to at least a gas kick load case unless the rig is unable to detect a kick. For the gas kick load case, the internal pressure profile must be based on a minimum volume of 50 bbl or the minimum kick detection capability of the rig, whichever is greater, and a kick intensity of 2.0 ppg for Class 1, 1.0 ppg of Class 2, and 0.5 ppg for Class 3 and 4 wells.
- Internal: Influx depth of the maximum pore pressure of 0.55 "gas kick gravity" of gas to surface while drilling the next hole section.
- External: Mud weight to the TOC, cement mix water gradient below TOC, and pore pressure in open hole.

Tubing Leak Near Surface While Producing (Production)

- Internal: SITP plus a packer fluid gradient to the shoe or top of packer.
- External: Mud base-fluid density to TOC, cement mix water gradient (8.4 ppg) below TOC, and pore pressure in open hole.

Tubing Leak Near Surface While Stimulating (Production)

- Internal: Surface pressure or pressure-relief system pressure, whichever is lower plus packer fluid gradient.
- External: Mud base-fluid density to TOC, cement mix water gradient (8.4 ppg) below TOC, and pore pressure in open hole.

Injection / Stimulation Down Casing (Production)

- Internal: Surface pressure plus injection fluid gradient.
- External: Mud base-fluid density to TOC, cement mix water gradient (8.4 ppg) below TOC, and pore pressure in open hole.

b) Collapse Loads

Lost Circulation (Surface / Intermediate)

- Internal: Lost circulation at the TD of the next hole section, and the fluid level falls to a depth where the hydrostatic of the mud equals pore pressure at the depth of the lost circulation zone.
- External: MW of the drilling mud that was in the hole when the casing was run.

Cementing (Surface / Intermediate / Production)

- Internal: Displacement fluid density.
- External: Mud weight from TOC to surface and cement slurry weight from TOC to casing shoe.

Full Evacuation (Production)

- Internal: Full void pipe.
- External: MW of drilling mud in the hole when the casing was run.

c) Tension Loads

Running Casing (Surface / Intermediate / Production)

- Axial: Buoyant weight of the string plus the lesser of 100,000 lb or the string weight in air.

Green Cement (Surface / Intermediate / Production)

- Axial: Buoyant weight of the string plus cement plug bump pressure load.

OXY's Minimum Design Criteria

Burst, Collapse, and Tensile SF are calculated using Landmark's Stress Check (Casing Design) software. A sundry will be requested if any lesser grade or different size casing is substituted.

1) Casing Design Assumptions

a) Burst Loads

CSG Test (Surface)

- Internal: Displacement fluid + pressure required to comply with regulatory casing test pressures. This will comply with both Onshore Oil and Gas Order No. 2 and 19.15.16 of the OCD Rules.
- External: Pore pressure in open hole.

CSG Test (Intermediate)

- Internal: Displacement fluid + pressure required to comply with regulatory casing test pressures. This will comply with both Onshore Oil and Gas Order No. 2 and 19.15.16 of the OCD Rules.
- External: Mud Weight to TOC, cement mix water gradient (8.4 ppg) below TOC, and pore pressure in open hole.

CSG Test (Production)

- Internal:
  - For Drilling: Displacement fluid + pressure required to comply with regulatory casing test pressures. This will comply with both Onshore Oil and Gas Order No. 2 and 19.15.16 of the OCD Rules.
  - For Production: The design pressure test should be the greater of (1) the planned test pressure prior to stimulation down the casing. (2) the regulatory test pressure, and (3) the expected gas lift system pressure. The design test fluid should be the fluid associated with pressure test having the greatest pressure.
- External:
  - For Drilling: Mud Weight to TOC, cement mix water gradient (8.4 ppg) below TOC, and pore pressure in open hole.
  - For Production: Mud base-fluid density to TOC, cement mix water gradient (8.4 ppg) below TOC, and pore pressure in open hole.

Gas Column (Surface)

- Internal: Assumes a full column of gas in the casing with a Gas/Oil Gradient of 0.1 psi/ft in the absence of better information. It is limited to the controlling pressure based on the fracture pressure at the shoe or the maximum expected pore pressure within the next drilling interval, whichever results in a lower surface pressure.
- External: Fluid gradient below TOC, pore pressure from the TOC to the Intermediate CSG shoe (if applicable), and MW of the drilling mud that was in the hole when the CSG was run from Intermediate CSG shoe to surface.

Bullheading (Surface / Intermediate)

- Internal: The string must be designed to withstand a pressure profile based on the fracture pressure at the casing shoe with a column of water above the shoe plus an additional surface pressure (in psi) of 0.02 X MD of the shoe to account for pumping friction pressure.
- External: Mud weight to TOC, cement mix water gradient (8.4 ppg) below TOC, and pore pressure in open hole.

Gas Kick (Intermediate)

- The string must be designed to at least a gas kick load case unless the rig is unable to detect a kick. For the gas kick load case, the internal pressure profile must be based on a minimum volume of 50 bbl or the minimum kick detection capability of the rig, whichever is greater, and a kick intensity of 2.0 ppg for Class 1, 1.0 ppg of Class 2, and 0.5 ppg for Class 3 and 4 wells.
- Internal: Influx depth of the maximum pore pressure of 0.55 "gas kick gravity" of gas to surface while drilling the next hole section.
- External: Mud weight to the TOC, cement mix water gradient below TOC, and pore pressure in open hole.

Tubing Leak Near Surface While Producing (Production)

- Internal: SITP plus a packer fluid gradient to the shoe or top of packer.
- External: Mud base-fluid density to TOC, cement mix water gradient (8.4 ppg) below TOC, and pore pressure in open hole.

Tubing Leak Near Surface While Stimulating (Production)

- Internal: Surface pressure or pressure-relief system pressure, whichever is lower plus packer fluid gradient.
- External: Mud base-fluid density to TOC, cement mix water gradient (8.4 ppg) below TOC, and pore pressure in open hole.

Injection / Stimulation Down Casing (Production)

- Internal: Surface pressure plus injection fluid gradient.
- External: Mud base-fluid density to TOC, cement mix water gradient (8.4 ppg) below TOC, and pore pressure in open hole.

b) Collapse Loads

Lost Circulation (Surface / Intermediate)

- Internal: Lost circulation at the TD of the next hole section, and the fluid level falls to a depth where the hydrostatic of the mud equals pore pressure at the depth of the lost circulation zone.
- External: MW of the drilling mud that was in the hole when the casing was run.

Cementing (Surface / Intermediate / Production)

- Internal: Displacement fluid density.
- External: Mud weight from TOC to surface and cement slurry weight from TOC to casing shoe.

Full Evacuation (Production)

- Internal: Full void pipe.
- External: MW of drilling mud in the hole when the casing was run.

c) Tension Loads

Running Casing (Surface / Intermediate / Production)

- Axial: Buoyant weight of the string plus the lesser of 100,000 lb or the string weight in air.

Green Cement (Surface / Intermediate / Production)

- Axial: Buoyant weight of the string plus cement plug bump pressure load.

OXY's Minimum Design Criteria

Burst, Collapse, and Tensile SF are calculated using Landmark's Stress Check (Casing Design) software. A sundry will be requested if any lesser grade or different size casing is substituted.

1) Casing Design Assumptions

a) Burst Loads

CSG Test (Surface)

- Internal: Displacement fluid + pressure required to comply with regulatory casing test pressures. This will comply with both Onshore Oil and Gas Order No. 2 and 19.15.16 of the OCD Rules.
- External: Pore pressure in open hole.

CSG Test (Intermediate)

- Internal: Displacement fluid + pressure required to comply with regulatory casing test pressures. This will comply with both Onshore Oil and Gas Order No. 2 and 19.15.16 of the OCD Rules.
- External: Mud Weight to TOC, cement mix water gradient (8.4 ppg) below TOC, and pore pressure in open hole.

CSG Test (Production)

- Internal:
  - For Drilling: Displacement fluid + pressure required to comply with regulatory casing test pressures. This will comply with both Onshore Oil and Gas Order No. 2 and 19.15.16 of the OCD Rules.
  - For Production: The design pressure test should be the greater of (1) the planned test pressure prior to stimulation down the casing. (2) the regulatory test pressure, and (3) the expected gas lift system pressure. The design test fluid should be the fluid associated with pressure test having the greatest pressure.
- External:
  - For Drilling: Mud Weight to TOC, cement mix water gradient (8.4 ppg) below TOC, and pore pressure in open hole.
  - For Production: Mud base-fluid density to TOC, cement mix water gradient (8.4 ppg) below TOC, and pore pressure in open hole.

Gas Column (Surface)

- Internal: Assumes a full column of gas in the casing with a Gas/Oil Gradient of 0.1 psi/ft in the absence of better information. It is limited to the controlling pressure based on the fracture pressure at the shoe or the maximum expected pore pressure within the next drilling interval, whichever results in a lower surface pressure.
- External: Fluid gradient below TOC, pore pressure from the TOC to the Intermediate CSG shoe (if applicable), and MW of the drilling mud that was in the hole when the CSG was run from Intermediate CSG shoe to surface.

Bullheading (Surface / Intermediate)

- Internal: The string must be designed to withstand a pressure profile based on the fracture pressure at the casing shoe with a column of water above the shoe plus an additional surface pressure (in psi) of 0.02 X MD of the shoe to account for pumping friction pressure.
- External: Mud weight to TOC, cement mix water gradient (8.4 ppg) below TOC, and pore pressure in open hole.

Gas Kick (Intermediate)

- The string must be designed to at least a gas kick load case unless the rig is unable to detect a kick. For the gas kick load case, the internal pressure profile must be based on a minimum volume of 50 bbl or the minimum kick detection capability of the rig, whichever is greater, and a kick intensity of 2.0 ppg for Class 1, 1.0 ppg of Class 2, and 0.5 ppg for Class 3 and 4 wells.
- Internal: Influx depth of the maximum pore pressure of 0.55 "gas kick gravity" of gas to surface while drilling the next hole section.
- External: Mud weight to the TOC, cement mix water gradient below TOC, and pore pressure in open hole.

Tubing Leak Near Surface While Producing (Production)

- Internal: SITP plus a packer fluid gradient to the shoe or top of packer.
- External: Mud base-fluid density to TOC, cement mix water gradient (8.4 ppg) below TOC, and pore pressure in open hole.

Tubing Leak Near Surface While Stimulating (Production)

- Internal: Surface pressure or pressure-relief system pressure, whichever is lower plus packer fluid gradient.
- External: Mud base-fluid density to TOC, cement mix water gradient (8.4 ppg) below TOC, and pore pressure in open hole.

Injection / Stimulation Down Casing (Production)

- Internal: Surface pressure plus injection fluid gradient.
- External: Mud base-fluid density to TOC, cement mix water gradient (8.4 ppg) below TOC, and pore pressure in open hole.

b) Collapse Loads

Lost Circulation (Surface / Intermediate)

- Internal: Lost circulation at the TD of the next hole section, and the fluid level falls to a depth where the hydrostatic of the mud equals pore pressure at the depth of the lost circulation zone.
- External: MW of the drilling mud that was in the hole when the casing was run.

Cementing (Surface / Intermediate / Production)

- Internal: Displacement fluid density.
- External: Mud weight from TOC to surface and cement slurry weight from TOC to casing shoe.

Full Evacuation (Production)

- Internal: Full void pipe.
- External: MW of drilling mud in the hole when the casing was run.

c) Tension Loads

Running Casing (Surface / Intermediate / Production)

- Axial: Buoyant weight of the string plus the lesser of 100,000 lb or the string weight in air.

Green Cement (Surface / Intermediate / Production)

- Axial: Buoyant weight of the string plus cement plug bump pressure load.

PERFORMANCE DATA

TMK UP DQX 5.500 in 20.00 lbs/ft P-110
Technical Data Sheet

Tubular Parameters

Size	5.500	in	Minimum Yield	110,000	psi
Nominal Weight	20.00	lbs/ft	Minimum Tensile	125,000	psi
Grade	P-110		Yield Load	641,000	lbs
PE Weight	19.81	lbs/ft	Tensile Load	729,000	lbs
Wall Thickness	0.361	in	Min Internal Yield Pressure	12,600	psi
Nominal ID	4.778	in	Collapse Pressure	11,100	psi
Drift Diameter	4.653	in			
Nom. Pipe Body Area	5.828	in²			

Connection Properties

Connection OD	6.050	in
Connection ID	4.778	in
Make-Up Loss	4.122	in
Critical Section Area	5.828	in²
Tension Efficiency	100.0	
Compression Efficiency	100.0	
Yield Load In Tension	641,000	lbs
Min Internal Yield Pressure	12,600	psi
Collapse Pressure	11,100	

Make-Up Torques

Min Make-Up Torque	11,600	ft-lbs
Opt. Make-Up Torque	[illegible]	ft-lbs
Max Make-Up Torque	[illegible]	
Yield Torque	[illegible]	ft-lbs

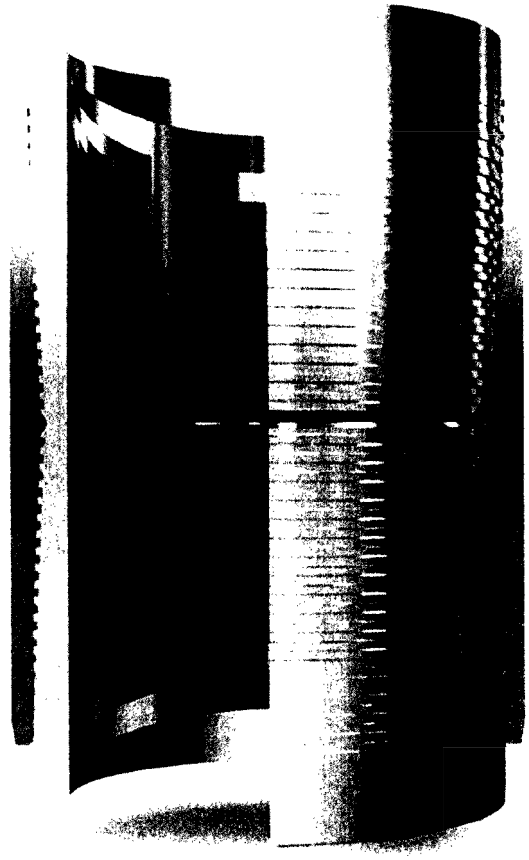

Information July [illegible]

NOTE: [illegible] technical data sheet for general information only. [illegible] guarantee performance in specific instances or particular purposes. [illegible] consideration of [illegible] to be completely [illegible] considering the [illegible] and operating parameters [illegible] TMK UP SCOOT [illegible] risk. To verify that you have the latest [illegible] TMK UP SCOOT technical [illegible] please contact [illegible] Sales [illegible] 1-888-[illegible]-58-2[illegible]

TMK

[illegible]

Permian Drilling
Hydrogen Sulfide Drilling Operations Plan
Patton MDP1 17 Federal 4H

Open drill site. No homes or buildings are near the proposed location.

1. Escape

   Personnel shall escape upwind of wellbore in the event of an emergency gas release. Escape can take place through the lease road on the Southeast side of the location. Personnel need to move to a safe distance and block the entrance to location. If the primary route is not an option due to the wind direction, then a secondary egress route should be taken.

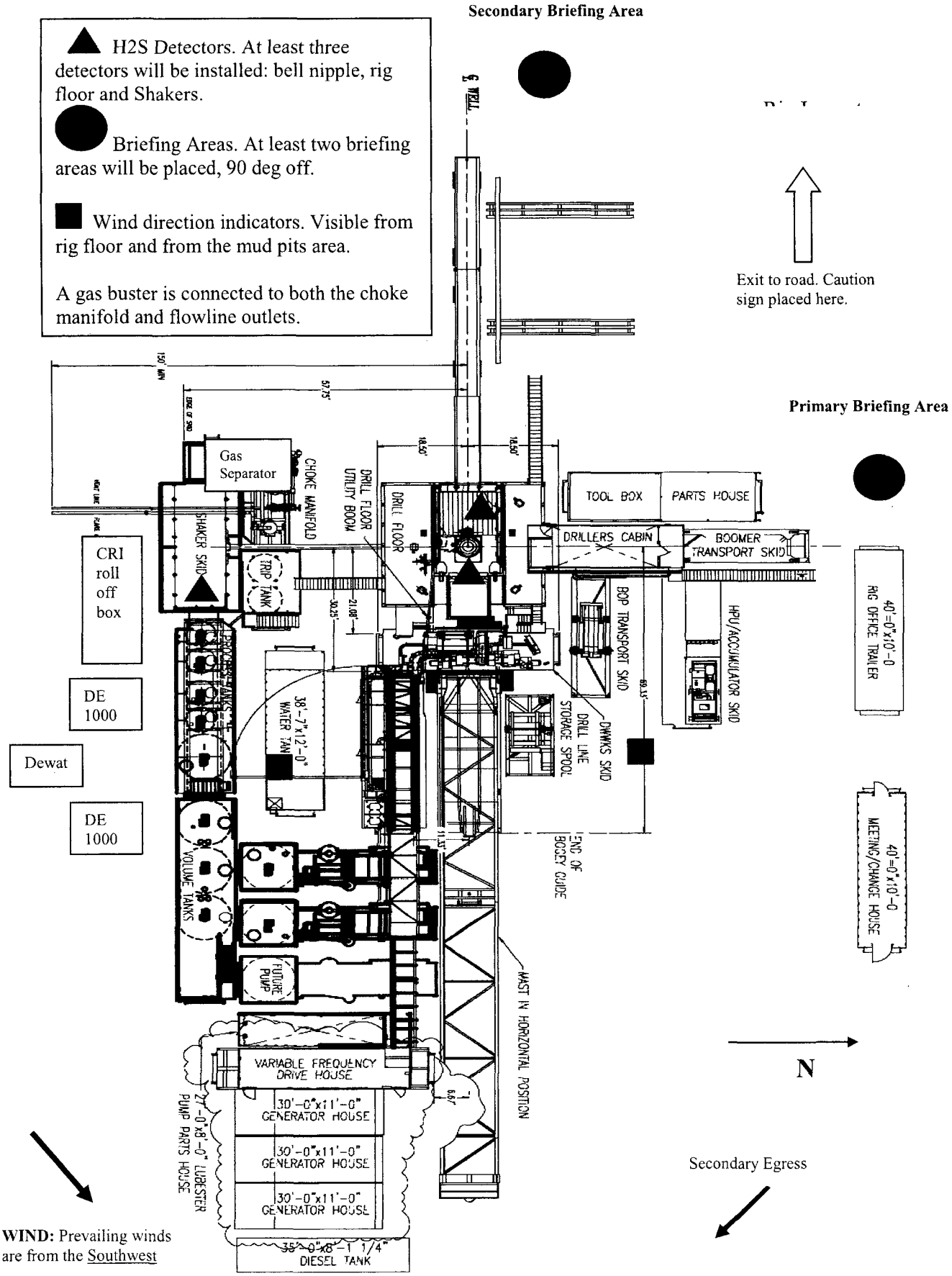
Secondary Briefing Area
H2S Detectors. At least three detectors will be installed: bell nipple, rig floor and Shakers.
Briefing Areas. At least two briefing areas will be placed, 90 deg off.
Wind direction indicators. Visible from rig floor and from the mud pits area.
A gas buster is connected to both the choke manifold and flowline outlets.
Exit to road. Caution sign placed here.
Primary Briefing Area
Gas Separator
CHOKE MANIFOLD
DRILL FLOOR UTILITY BOOM
DRILL FLOOR
SHAKER SKID
TRIP TANK
TOOL BOX
PARTS HOUSE
DRILLERS CABIN
BOOMER TRANSPORT SKID
BOP TRANSPORT SKID
HPU/ACCUMULATOR SKID
DRILL LINE STORAGE SPOOL
DWWKS SKID
40'-0"x10'-0 RIG OFFICE TRAILER
40'-0"x10'-0 MEETING/CHANGE HOUSE
CRI roll off box
DE 1000
Dewat
DE 1000
38'-7"x12'-0" WATER TANK
VOLUME TANKS
FUTURE PUMP
END OF BOGEY GUIDE
MAST IN HORIZONTAL POSITION
VARIABLE FREQUENCY DRIVE HOUSE
30'-0"x11'-0" GENERATOR HOUSE
30'-0"x11'-0" GENERATOR HOUSE
30'-0"x11'-0" GENERATOR HOUSE
27'-0"x8'-0" LUBESTER PUMP PARTS HOUSE
35'-0"x8'-1 1/4" DIESEL TANK
N
Secondary Egress
WIND: Prevailing winds are from the Southwest

Permian Drilling
Hydrogen Sulfide Drilling Operations Plan
New Mexico

Scope

This contingency plan establishes guidelines for the public, all company employees, and contract employees who's work activities may involve exposure to hydrogen sulfide (H2S) gas.
While drilling this well, it is possible to encounter H2S bearing formations. At all times, the first barrier to control H2S emissions will be the drilling fluid, which will have a density high enough to control influx.

Objective

1. Provide an immediate and predetermined response plan to any condition when H2S is detected. All H2S detections in excess of 10 parts per million (ppm) concentration are considered an Emergency.

2. Prevent any and all accidents, and prevent the uncontrolled release of hydrogen sulfide into the atmosphere.

3. Provide proper evacuation procedures to cope with emergencies.

4. Provide immediate and adequate medical attention should an injury occur.

Discussion

Implementation:	This plan with all details is to be fully implemented before drilling to commence.
Emergency response Procedure:	This section outlines the conditions and denotes steps to be taken in the event of an emergency.
Emergency equipment Procedure:	This section outlines the safety and emergency equipment that will be required for the drilling of this well.
Training provisions:	This section outlines the training provisions that must be adhered to prior to drilling.
Drilling emergency call lists:	Included are the telephone numbers of all persons to be contacted should an emergency exist.
Briefing:	This section deals with the briefing of all people involved in the drilling operation.
Public safety:	Public safety personnel will be made aware of any potential evacuation and any additional support needed.
Check lists:	Status check lists and procedural check lists have been included to insure adherence to the plan.
General information:	A general information section has been included to supply support information.

Hydrogen Sulfide Training

All personnel, whether regularly assigned, contracted, or employed on an unscheduled basis, will receive training from a qualified instructor in the following areas prior to commencing drilling operations on the well:

1. The hazards and characteristics of H2S.
2. Proper use and maintenance of personal protective equipment and life support systems.
3. H2S detection.
4. Proper use of H2S detectors, alarms, warning systems, briefing areas, evacuation procedures and prevailing winds.
5. Proper techniques for first aid and rescue procedures.
6. Physical effects of hydrogen sulfide on the human body.
7. Toxicity of hydrogen sulfide and sulfur dioxide.
8. Use of SCBA and supplied air equipment.
9. First aid and artificial respiration.
10. Emergency rescue.

In addition, supervisory personnel will be trained in the following areas:

1. The effects of H2S on metal components. If high tensile strength tubular is to be used, personnel will be trained in their special maintenance requirements.
2. Corrective action and shut-in procedures when drilling a well, blowout prevention and well control procedures.
3. The contents and requirements of the H2S Drilling Operations Plan.

H2S training refresher must have been taken within one year prior to drilling the well. Specifics on the well to be drilled will be discussed during the pre-spud meeting. H2S and well control (choke) drills will be performed while drilling the well, at least on a weekly basis. This plan shall be available in the well site. All personnel will be required to carry the documentation proving that the H2S training has been taken.

Service company and visiting personnel

A. Each service company that will be on this well will be notified if the zone contains H2S.

B. Each service company must provide for the training and equipment of their employees before they arrive at the well site.

C. Each service company will be expected to attend a well site briefing

Emergency Equipment Requirements

1. Well control equipment

The well shall have hydraulic BOP equipment for the anticipated pressures. Equipment is to be tested on installation and follow Oxy Well Control standard, as well as BLM Onshore Order #2.

Special control equipment:

A. Hydraulic BOP equipment with remote control on ground. Remotely operated choke.
B. Rotating head
C. Gas buster equipment shall be installed before drilling out of surface pipe.

2. Protective equipment for personnel

A. Four (4) 30-minute positive pressure air packs (2 at each briefing area) on location.

B. Adequate fire extinguishers shall be located at strategic locations.

C. Radio / cell telephone communication will be available at the rig.

- Rig floor and trailers.
- Vehicle.

3. Hydrogen sulfide sensors and alarms

A. H2S sensor with alarms will be located on the rig floor, at the bell nipple, and at the flow line. These monitors will be set to alarm at 10 ppm with strobe light, and audible alarm.
B. Hand operated detectors with tubes.
C. H2S monitor tester (to be provided by contract Safety Company.)
D. There shall be one combustible gas detector on location at all times.

4. Visual Warning Systems

A. One sign located at each location entrance with the following language:

Caution – potential poison gas
Hydrogen sulfide
No admittance without authorization

Wind sock – wind streamers:

A. One 36" (in length) wind sock located at protection center, at height visible from rig floor.
B. One 36" (in length) wind sock located at height visible from pit areas.

Condition flags

A. One each condition flag to be displayed to denote conditions.

green – normal conditions
yellow – potential danger
red – danger, H2S present

B. Condition flag shall be posted at each location sign entrance.

5. Mud Program

The mud program is designed to minimize the risk of having H2S and other formation fluids at surface. Proper mud weight and safe drilling practices will be applied. H2S scavengers will be used to minimize the hazards while drilling. Below is a summary of the drilling program.

Mud inspection devices:

Garrett gas train or hatch tester for inspection of sulfide concentration in mud system.

6. Metallurgy

A. Drill string, casing, tubing, wellhead, blowout preventers, drilling spools or adapters, kill lines, choke manifold, lines and valves shall be suitable for the H2S service.
B. All the elastomers, packing, seals and ring gaskets shall be suitable for H2S service.

7. Well Testing

No drill stem test will be performed on this well.

8. Evacuation plan

Evacuation routes should be established prior to well spud for each well and discussed with all rig personnel.

9. Designated area

   A. Parking and visitor area: all vehicles are to be parked at a predetermined safe distance from the wellhead.
   B. There will be a designated smoking area.
   C. Two briefing areas on either side of the location at the maximum allowable distance from the well bore so they offset prevailing winds perpendicularly, or at a 45-degree angle if wind direction tends to shift in the area.

Emergency procedures

A. In the event of any evidence of H2S level above 10 ppm, take the following steps:

   1. The Driller will pick up off bottom, shut down the pumps, slow down the pipe rotation.

   2. Secure and don escape breathing equipment, report to the upwind designated safe briefing / muster area.

   3. All personnel on location will be accounted for and emergency search should begin for any missing, the Buddy System will be implemented.

   4. Order non-essential personnel to leave the well site, order all essential personnel out of the danger zone and upwind to the nearest designated safe briefing / muster area.

   5. Entrance to the location will be secured to a higher level than our usual "Meet and Greet" requirement, and the proper condition flag will be displayed at the entrance to the location.

   6. Take steps to determine if the H2S level can be corrected or suppressed and, if so, proceed as required.

B. If uncontrollable conditions occur:

   1. Take steps to protect and/or remove any public in the down-wind area from the rig – partial evacuation and isolation. Notify necessary public safety personnel and appropriate regulatory entities (i.e. BLM) of the situation.

2. Remove all personnel to the nearest upwind designated safe briefing / muster area or off location.

3. Notify public safety personnel of safe briefing / muster area.

4. An assigned crew member will blockade the entrance to the location. No unauthorized personnel will be allowed entry to the location.

5. Proceed with best plan (at the time) to regain control of the well. Maintain tight security and safety procedures.

C. Responsibility:

1. Designated personnel.

   a. Shall be responsible for the total implementation of this plan.
   b. Shall be in complete command during any emergency.
   c. Shall designate a back-up.

All personnel:

1. On alarm, don escape unit and report to the nearest upwind designated safe briefing / muster area upw
2. Check status of personnel (buddy system).
3. Secure breathing equipment.
4. Await orders from supervisor.

Drill site manager:

1. Don escape unit if necessary and report to nearest upwind designated safe briefing / muster area.
2. Coordinate preparations of individuals to return to point of release with tool pusher and driller (using the buddy system).
3. Determine H2S concentrations.
4. Assess situation and take control measures.

Tool pusher:

1. Don escape unit Report to up nearest upwind designated safe briefing / muster area.
2. Coordinate preparation of individuals to return to point of release with tool pusher drill site manager (using the buddy system).
3. Determine H2S concentration.
4. Assess situation and take control measures.

Driller:

1. Don escape unit, shut down pumps, continue

		rotating DP.
	2.	Check monitor for point of release.
	3.	Report to nearest upwind designated safe briefing / muster area.
	4.	Check status of personnel (in an attempt to rescue, use the buddy system).
	5.	Assigns least essential person to notify Drill Site Manager and tool pusher by quickest means in case of their absence.
	6.	Assumes the responsibilities of the Drill Site Manager and tool pusher until they arrive should they be absent.
Derrick man Floor man #1 Floor man #2	1.	Will remain in briefing / muster area until instructed by supervisor.
Mud engineer:	1.	Report to nearest upwind designated safe briefing / muster area.
	2.	When instructed, begin check of mud for ph and H2S level. (Garett gas train.)
Safety personnel:	1.	Mask up and check status of all personnel and secure operations as instructed by drill site manager.

Taking a kick

When taking a kick during an H2S emergency, all personnel will follow standard Well control procedures after reporting to briefing area and masking up.

Open-hole logging

All unnecessary personnel off floor. Drill Site Manager and safety personnel should monitor condition, advise status and determine need for use of air equipment.

Running casing or plugging

Following the same "tripping" procedure as above. Drill Site Manager and safety personnel should determine if all personnel have access to protective equipment.

Ignition procedures

The decision to ignite the well is the responsibility of the operator (Oxy Drilling Management). The decision should be made only as a last resort and in a situation where it is clear that:

1. Human life and property are endangered.
2. There is no hope controlling the blowout under the prevailing conditions at the well.

Instructions for igniting the well

1. Two people are required for the actual igniting operation. They must wear self-contained breathing units and have a safety rope attached. One man (tool pusher or safety engineer) will check the atmosphere for explosive gases with the gas monitor. The other man is responsible for igniting the well.
2. Primary method to ignite: 25 mm flare gun with range of approximately 500 feet.
3. Ignite upwind and do not approach any closer than is warranted.
4. Select the ignition site best for protection, and which offers an easy escape route.
5. Before firing, check for presence of combustible gas.
6. After lighting, continue emergency action and procedure as before.
7. All unassigned personnel will remain in briefing area until instructed by supervisor or directed by the Drill Site Manager.

Remember: After well is ignited, burning hydrogen sulfide will convert to sulfur dioxide, which is also highly toxic. **Do not assume the area is safe after the well is ignited.**

Status check list

Note: All items on this list must be completed before drilling to production casing point.

1. H2S sign at location entrance.
2. Two (2) wind socks located as required.
3. Four (4) 30-minute positive pressure air packs (2 at each Briefing area) on location for all rig personnel and mud loggers.
4. Air packs inspected and ready for use.
5. Cascade system and hose line hook-up as needed.
6. Cascade system for refilling air bottles as needed.
7. Condition flag on location and ready for use.
8. H2S detection system hooked up and tested.
9. H2S alarm system hooked up and tested.
10. Hand operated H2S detector with tubes on location.
11. 1 – 100' length of nylon rope on location.
12. All rig crew and supervisors trained as required.
13. All outside service contractors advised of potential H2S hazard on well.
14. No smoking sign posted and a designated smoking area identified.
15. Calibration of all H2S equipment shall be noted on the IADC report.

Checked by:_____ Date:_____

Procedural check list during H2S events

Perform each tour:

1. Check fire extinguishers to see that they have the proper charge.

2. Check breathing equipment to ensure that it in proper working order.

3. Make sure all the H2S detection system is operative.

Perform each week:

1. Check each piece of breathing equipment to make sure that demand or forced air regulator is working. This requires that the bottle be opened and the mask assembly be put on tight enough so that when you inhale, you receive air or feel air flow.

2. BOP skills (well control drills).

3. Check supply pressure on BOP accumulator stand by source.

4. Check breathing equipment mask assembly to see that straps are loosened and turned back, ready to put on.

5. Check pressure on breathing equipment air bottles to make sure they are charged to full volume. (Air quality checked for proper air grade "D" before bringing to location)

6. Confirm pressure on all supply air bottles.

7. Perform breathing equipment drills with on-site personnel.

8. Check the following supplies for availability.

   A. Emergency telephone list.
   B. Hand operated H2S detectors and tubes.

General evacuation plan

1. When the company approved supervisor (Drill Site Manager, consultant, rig pusher, or driller) determines the H2S gas cannot be limited to the well location and the public will be involved, he will activate the evacuation plan.

2. Drill Site Manager or designee will notify local government agency that a hazardous condition exists and evacuation needs to be implemented.

3. Company or contractor safety personnel that have been trained in the use of H2S detection equipment and self-contained breathing equipment will monitor H2S concentrations, wind directions, and area of exposure. They will delineate the outer perimeter of the hazardous gas area. Extension to the evacuation area will be determined from information gathered.

4. Law enforcement personnel (state police, police dept., fire dept., and sheriff's dept.) Will be called to aid in setting up and maintaining road blocks. Also, they will aid in evacuation of the public if necessary.

5. After the discharge of gas has been controlled, company safety personnel will determine when the area is safe for re-entry.

Important: Law enforcement personnel will not be asked to come into a contaminated area. Their assistance will be limited to uncontaminated areas. Constant radio contact will be maintained with them.

Emergency actions

Well blowout – if emergency

1. Evacuate all personnel to "Safe Briefing / Muster Areas" or off location if needed.

2. If sour gas – evacuate rig personnel.

3. If sour gas – evacuate public within 3000 ft radius of exposure.

4. Don SCBA and shut well in if possible using the buddy system.

5. Notify Drilling Superintendent and call 911 for emergency help (fire dept and ambulance) if needed.
6. Implement the Blowout Contingency Plan, and Drilling Emergency Action Plan.

6. Give first aid as needed.

Person down location/facility

1. If immediately possible, contact 911. Give location and wait for confirmation.

2. Don SCBA and perform rescue operation using buddy system.

Toxic effects of hydrogen sulfide

Hydrogen sulfide is extremely toxic. The acceptable ceiling concentration for eight-hour exposure is 10 ppm, which is .001% by volume. Hydrogen sulfide is heavier than air (specific gravity – 1.192) and colorless. It forms an explosive mixture with air between 4.3 and 46.0 percent by volume. Hydrogen sulfide is almost as toxic as hydrogen cyanide and is between five and six times more toxic than carbon monoxide. Toxicity data for hydrogen sulfide and various other gases are compared in table i. Physical effects at various hydrogen sulfide exposure levels are shown in table ii.

Table i
Toxicity of various gases

Common name	Chemical formula	Specific gravity (sc=1)	Threshold limit (1)	Hazardous limit (2)	Lethal concentration (3)
Hydrogen Cyanide	Hcn	0.94	10 ppm	150 ppm/hr	300 ppm
Hydrogen Sulfide	H2S	1.18	10 ppm	250 ppm/hr	600 ppm
Sulfur Dioxide	So2	2.21	5 ppm	-	1000 ppm
Chlorine	Cl2	2.45	1 ppm	4 ppm/hr	1000 ppm
Carbon Monoxide	Co	0.97	50 ppm	400 ppm/hr	1000 ppm
Carbon Dioxide	Co2	1.52	5000 ppm	5%	10%
Methane	Ch4	0.55	90,000 ppm	Combustible above 5% in air	

1) threshold limit – concentration at which it is believed that all workers may be repeatedly exposed day after day without adverse effects.

2) hazardous limit – concentration that will cause death with short-term exposure.

3) lethal concentration – concentration that will cause death with short-term exposure.

Toxic effects of hydrogen sulfide

Table ii
Physical effects of hydrogen sulfide

Percent (%)	Ppm	Concentration Grains 100 std. Ft3*	Physical effects
0.001	<10	00.65	Obvious and unpleasant odor.

0.002	10	01.30	Safe for 8 hours of exposure.
0.010	100	06.48	Kill smell in 3 – 15 minutes. May sting eyes and throat.
0.020	200	12.96	Kills smell shortly; stings eyes and throat.
0.050	500	32.96	Dizziness; breathing ceases in a few minutes; needs prompt artificial respiration.
0.070	700	45.36	Unconscious quickly; death will result if not rescued promptly.
0.100	1000	64.30	Unconscious at once; followed by death within minutes.

*at 15.00 psia and 60'f.

Use of self-contained breathing equipment (SCBA)

1. Written procedures shall be prepared covering safe use of SCBA's in dangerous atmosphere, which might be encountered in normal operations or in emergencies. Personnel shall be familiar with these procedures and the available SCBA.

2 SCBA's shall be inspected frequently at random to insure that they are properly used, cleaned, and maintained.

3. Anyone who may use the SCBA's shall be trained in how to insure proper face-piece to face seal. They shall wear SCBA's in normal air and then wear them in a test atmosphere. (note: such items as facial hair {beard or sideburns} and eyeglasses will not allow proper seal.) Anyone that may be reasonably expected to wear SCBA's should have these items removed before entering a toxic atmosphere. A special mask must be obtained for anyone who must wear eyeglasses or contact lenses.

4. Maintenance and care of SCBA's:

   a. A program for maintenance and care of SCBA's shall include the following:
      1. Inspection for defects, including leak checks.
      2. Cleaning and disinfecting.
      3. Repair.
      4. Storage.

   b. Inspection, self-contained breathing apparatus for emergency use shall be inspected monthly.
      1. Fully charged cylinders.
      2. Regulator and warning device operation.
      3. Condition of face piece and connections.
      4. Rubber parts shall be maintained to keep them pliable and prevent deterioration.

   c. Routinely used SCBA's shall be collected, cleaned and disinfected as frequently as necessary to insure proper protection is provided.

5. Persons assigned tasks that requires use of self-contained breathing equipment shall be certified physically fit (medically cleared) for breathing equipment usage at least annually.

6. SCBA's should be worn when:

   A. Any employee works near the top or on top of any tank unless test reveals less than 10 ppm of H2S.

B. When breaking out any line where H2S can reasonably be expected.

C. When sampling air in areas to determine if toxic concentrations of H2S exists.

D. When working in areas where over 10 ppm H2S has been detected.

E. At any time there is a doubt as to the H2S level in the area to be entered.

Rescue
First aid for H2S poisoning

Do not panic!

Remain calm – think!

1. Don SCBA breathing equipment.

2. Remove victim(s) utilizing buddy system to fresh air as quickly as possible. (go up-wind from source or at right angle to the wind. Not down wind.)

3. Briefly apply chest pressure – arm lift method of artificial respiration to clean the victim's lungs and to avoid inhaling any toxic gas directly from the victim's lungs.

4. Provide for prompt transportation to the hospital, and continue giving artificial respiration if needed.

5. Hospital(s) or medical facilities need to be informed, before-hand, of the possibility of H2S gas poisoning – no matter how remote the possibility is.

6. Notify emergency room personnel that the victim(s) has been exposed to H2S gas.

Besides basic first aid, everyone on location should have a good working knowledge of artificial respiration.

Revised CM 6/27/2012

ENGINEERING DESIGNS

PRD NM DIRECTIONAL PLANS (NAD 1983)
Patton MDP1 17 Federal
Patton MDP1 17 Federal 4H

WB00

Plan: Permitting Plan

Standard Planning Report

14 February, 2017

Oxy

Planning Report

Database:	HOPSPP	**Local Co-ordinate Reference:**	Well Patton MDP1 17 Federal 4H
Company:	ENGINEERING DESIGNS	**TVD Reference:**	WELL @ 3567.20ft (Original Well Elev)
Project:	PRD NM DIRECTIONAL PLANS (NAD 1983)	**MD Reference:**	WELL @ 3567.20ft (Original Well Elev)
Site:	Patton MDP1 17 Federal	**North Reference:**	Grid
Well:	Patton MDP1 17 Federal 4H	**Survey Calculation Method:**	Minimum Curvature
Wellbore:	WB00		
Design:	Permitting Plan		

Project PRD NM DIRECTIONAL PLANS (NAD 1983)

Map System:	US State Plane 1983	**System Datum:**	Mean Sea Level
Geo Datum:	North American Datum 1983		
Map Zone:	New Mexico Eastern Zone		Using geodetic scale factor

Site Patton MDP1 17 Federal

Site Position:		**Northing:**	446,011.46 usft	**Latitude:**	32° 13' 30.217436 N
From:	Map	**Easting:**	704,511.86 usft	**Longitude:**	103° 48' 20.355774 W
Position Uncertainty:	0.00 ft	**Slot Radius:**	13.200 in	**Grid Convergence:**	0.28 °

Well Patton MDP1 17 Federal 4H

Well Position	**+N/-S**	269.16 ft	**Northing:**	446,280.60 usft	**Latitude:**	32° 13' 32.810215 N
	+E/-W	1,444.99 ft	**Easting:**	705,956.76 usft	**Longitude:**	103° 48' 3.519626 W
Position Uncertainty		0.00 ft	**Wellhead Elevation:**	3,540.70 ft	**Ground Level:**	3,540.70 ft

Wellbore WB00

Magnetics	**Model Name**	**Sample Date**	**Declination (°)**	**Dip Angle (°)**	**Field Strength (nT)**
	HDGM	12/31/2016	7.00	60.02	48,206

Design *Permitting Plan*

Audit Notes:

Version:	**Phase:**	PROTOTYPE	**Tie On Depth:**	0.00

Vertical Section:	**Depth From (TVD) (ft)**	**+N/-S (ft)**	**+E/-W (ft)**	**Direction (°)**
	0.00	0.00	0.00	171.63

Plan Sections

Measured Depth (ft)	Inclination (°)	Azimuth (°)	Vertical Depth (ft)	+N/-S (ft)	+E/-W (ft)	Dogleg Rate (°/100ft)	Build Rate (°/100ft)	Turn Rate (°/100ft)	TFO (°)	Target
0.00	0.00	0.00	0.00	0.00	0.00	0.00	0.00	0.00	0.00	
1,500.00	0.00	0.00	1,500.00	0.00	0.00	0.00	0.00	0.00	0.00	
1,600.00	1.00	30.00	1,599.99	0.76	0.44	1.00	1.00	0.00	30.00	
9,541.00	1.00	30.00	9,539.79	120.78	69.73	0.00	0.00	0.00	0.00	
10,442.06	89.90	132.01	10,114.74	-254.73	501.23	10.00	9.87	11.32	102.01	
10,576.17	89.90	132.01	10,114.98	-344.49	600.87	0.00	0.00	0.00	0.00	
11,053.42	90.10	179.74	10,115.00	-767.58	790.35	10.00	0.04	10.00	89.78	FTP
15,805.32	90.10	179.74	10,107.00	-5,519.42	812.10	0.00	0.00	0.00	0.00	P17_4H_BHL

Database:	HOPSPP	**Local Co-ordinate Reference:**	Well Patton MDP1 17 Federal 4H
Company:	ENGINEERING DESIGNS	**TVD Reference:**	WELL @ 3567.20ft (Original Well Elev)
Project:	PRD NM DIRECTIONAL PLANS (NAD 1983)	**MD Reference:**	WELL @ 3567.20ft (Original Well Elev)
Site:	Patton MDP1 17 Federal	**North Reference:**	Grid
Well:	Patton MDP1 17 Federal 4H	**Survey Calculation Method:**	Minimum Curvature
Wellbore:	WB00		
Design:	Permitting Plan		

Planned Survey

Measured Depth (ft)	Inclination (°)	Azimuth (°)	Vertical Depth (ft)	+N/-S (ft)	+E/-W (ft)	Vertical Section (ft)	Dogleg Rate (°/100ft)	Build Rate (°/100ft)	Turn Rate (°/100ft)
0.00	0.00	0.00	0.00	0.00	0.00	0.00	0.00	0.00	0.00
100.00	0.00	0.00	100.00	0.00	0.00	0.00	0.00	0.00	0.00
200.00	0.00	0.00	200.00	0.00	0.00	0.00	0.00	0.00	0.00
300.00	0.00	0.00	300.00	0.00	0.00	0.00	0.00	0.00	0.00
400.00	0.00	0.00	400.00	0.00	0.00	0.00	0.00	0.00	0.00
500.00	0.00	0.00	500.00	0.00	0.00	0.00	0.00	0.00	0.00
600.00	0.00	0.00	600.00	0.00	0.00	0.00	0.00	0.00	0.00
677.00	0.00	0.00	677.00	0.00	0.00	0.00	0.00	0.00	0.00
Rustler									
700.00	0.00	0.00	700.00	0.00	0.00	0.00	0.00	0.00	0.00
800.00	0.00	0.00	800.00	0.00	0.00	0.00	0.00	0.00	0.00
900.00	0.00	0.00	900.00	0.00	0.00	0.00	0.00	0.00	0.00
1,000.00	0.00	0.00	1,000.00	0.00	0.00	0.00	0.00	0.00	0.00
1,047.00	0.00	0.00	1,047.00	0.00	0.00	0.00	0.00	0.00	0.00
Salado									
1,100.00	0.00	0.00	1,100.00	0.00	0.00	0.00	0.00	0.00	0.00
1,200.00	0.00	0.00	1,200.00	0.00	0.00	0.00	0.00	0.00	0.00
1,300.00	0.00	0.00	1,300.00	0.00	0.00	0.00	0.00	0.00	0.00
1,400.00	0.00	0.00	1,400.00	0.00	0.00	0.00	0.00	0.00	0.00
1,500.00	0.00	0.00	1,500.00	0.00	0.00	0.00	0.00	0.00	0.00
Nudge away from other wells at TFO 30°									
1,600.00	1.00	30.00	1,599.99	0.76	0.44	-0.68	1.00	1.00	0.00
Allow BHA to walk at TFO 30°									
1,700.00	1.00	30.00	1,699.98	2.27	1.31	-2.05	0.00	0.00	0.00
1,800.00	1.00	30.00	1,799.96	3.78	2.18	-3.42	0.00	0.00	0.00
1,900.00	1.00	30.00	1,899.95	5.29	3.05	-4.79	0.00	0.00	0.00
2,000.00	1.00	30.00	1,999.93	6.80	3.93	-6.16	0.00	0.00	0.00
2,100.00	1.00	30.00	2,099.92	8.31	4.80	-7.53	0.00	0.00	0.00
2,200.00	1.00	30.00	2,199.90	9.82	5.67	-8.89	0.00	0.00	0.00
2,300.00	1.00	30.00	2,299.89	11.34	6.54	-10.26	0.00	0.00	0.00
2,400.00	1.00	30.00	2,399.87	12.85	7.42	-11.63	0.00	0.00	0.00
2,500.00	1.00	30.00	2,499.86	14.36	8.29	-13.00	0.00	0.00	0.00
2,600.00	1.00	30.00	2,599.84	15.87	9.16	-14.37	0.00	0.00	0.00
2,700.00	1.00	30.00	2,699.83	17.38	10.04	-15.74	0.00	0.00	0.00
2,800.00	1.00	30.00	2,799.81	18.89	10.91	-17.10	0.00	0.00	0.00
2,857.20	1.00	30.00	2,857.00	19.76	11.41	-17.89	0.00	0.00	0.00
Castile Anhydrite									
2,900.00	1.00	30.00	2,899.80	20.40	11.78	-18.47	0.00	0.00	0.00
3,000.00	1.00	30.00	2,999.78	21.92	12.65	-19.84	0.00	0.00	0.00
3,100.00	1.00	30.00	3,099.77	23.43	13.53	-21.21	0.00	0.00	0.00
3,200.00	1.00	30.00	3,199.75	24.94	14.40	-22.58	0.00	0.00	0.00
3,300.00	1.00	30.00	3,299.74	26.45	15.27	-23.95	0.00	0.00	0.00
3,400.00	1.00	30.00	3,399.72	27.96	16.14	-25.31	0.00	0.00	0.00
3,500.00	1.00	30.00	3,499.71	29.47	17.02	-26.68	0.00	0.00	0.00
3,600.00	1.00	30.00	3,599.69	30.98	17.89	-28.05	0.00	0.00	0.00
3,700.00	1.00	30.00	3,699.68	32.50	18.76	-29.42	0.00	0.00	0.00
3,800.00	1.00	30.00	3,799.66	34.01	19.63	-30.79	0.00	0.00	0.00
3,900.00	1.00	30.00	3,899.64	35.52	20.51	-32.16	0.00	0.00	0.00
4,000.00	1.00	30.00	3,999.63	37.03	21.38	-33.52	0.00	0.00	0.00
4,100.00	1.00	30.00	4,099.61	38.54	22.25	-34.89	0.00	0.00	0.00
4,200.00	1.00	30.00	4,199.60	40.05	23.12	-36.26	0.00	0.00	0.00
4,300.00	1.00	30.00	4,299.58	41.56	24.00	-37.63	0.00	0.00	0.00
4,377.43	1.00	30.00	4,377.00	42.73	24.67	-38.69	0.00	0.00	0.00

Database:	HOPSPP	**Local Co-ordinate Reference:**	Well Patton MDP1 17 Federal 4H
Company:	ENGINEERING DESIGNS	**TVD Reference:**	WELL @ 3567.20ft (Original Well Elev)
Project:	PRD NM DIRECTIONAL PLANS (NAD 1983)	**MD Reference:**	WELL @ 3567.20ft (Original Well Elev)
Site:	Patton MDP1 17 Federal	**North Reference:**	Grid
Well:	Patton MDP1 17 Federal 4H	**Survey Calculation Method:**	Minimum Curvature
Wellbore:	WB00		
Design:	Permitting Plan		

Planned Survey

Measured Depth (ft)	Inclination (°)	Azimuth (°)	Vertical Depth (ft)	+N/-S (ft)	+E/-W (ft)	Vertical Section (ft)	Dogleg Rate (°/100ft)	Build Rate (°/100ft)	Turn Rate (°/100ft)
Delaware									
4,400.00	1.00	30.00	4,399.57	43.08	24.87	-39.00	0.00	0.00	0.00
4,410.43	1.00	30.00	4,410.00	43.23	24.96	-39.14	0.00	0.00	0.00
Bell Canyon									
4,500.00	1.00	30.00	4,499.55	44.59	25.74	-40.36	0.00	0.00	0.00
4,600.00	1.00	30.00	4,599.54	46.10	26.61	-41.73	0.00	0.00	0.00
4,700.00	1.00	30.00	4,699.52	47.61	27.49	-43.10	0.00	0.00	0.00
4,800.00	1.00	30.00	4,799.51	49.12	28.36	-44.47	0.00	0.00	0.00
4,900.00	1.00	30.00	4,899.49	50.63	29.23	-45.84	0.00	0.00	0.00
5,000.00	1.00	30.00	4,999.48	52.14	30.11	-47.21	0.00	0.00	0.00
5,100.00	1.00	30.00	5,099.46	53.66	30.98	-48.57	0.00	0.00	0.00
5,173.55	1.00	30.00	5,173.00	54.77	31.62	-49.58	0.00	0.00	0.00
Cherry Canyon									
5,200.00	1.00	30.00	5,199.45	55.17	31.85	-49.94	0.00	0.00	0.00
5,300.00	1.00	30.00	5,299.43	56.68	32.72	-51.31	0.00	0.00	0.00
5,400.00	1.00	30.00	5,399.42	58.19	33.60	-52.68	0.00	0.00	0.00
5,500.00	1.00	30.00	5,499.40	59.70	34.47	-54.05	0.00	0.00	0.00
5,600.00	1.00	30.00	5,599.39	61.21	35.34	-55.42	0.00	0.00	0.00
5,700.00	1.00	30.00	5,699.37	62.72	36.21	-56.78	0.00	0.00	0.00
5,800.00	1.00	30.00	5,799.36	64.24	37.09	-58.15	0.00	0.00	0.00
5,900.00	1.00	30.00	5,899.34	65.75	37.96	-59.52	0.00	0.00	0.00
6,000.00	1.00	30.00	5,999.32	67.26	38.83	-60.89	0.00	0.00	0.00
6,100.00	1.00	30.00	6,099.31	68.77	39.70	-62.26	0.00	0.00	0.00
6,200.00	1.00	30.00	6,199.29	70.28	40.58	-63.63	0.00	0.00	0.00
6,300.00	1.00	30.00	6,299.28	71.79	41.45	-64.99	0.00	0.00	0.00
6,400.00	1.00	30.00	6,399.26	73.30	42.32	-66.36	0.00	0.00	0.00
6,500.00	1.00	30.00	6,499.25	74.82	43.19	-67.73	0.00	0.00	0.00
6,525.76	1.00	30.00	6,525.00	75.20	43.42	-68.08	0.00	0.00	0.00
Brushy Canyon									
6,600.00	1.00	30.00	6,599.23	76.33	44.07	-69.10	0.00	0.00	0.00
6,700.00	1.00	30.00	6,699.22	77.84	44.94	-70.47	0.00	0.00	0.00
6,800.00	1.00	30.00	6,799.20	79.35	45.81	-71.84	0.00	0.00	0.00
6,900.00	1.00	30.00	6,899.19	80.86	46.69	-73.20	0.00	0.00	0.00
7,000.00	1.00	30.00	6,999.17	82.37	47.56	-74.57	0.00	0.00	0.00
7,100.00	1.00	30.00	7,099.16	83.88	48.43	-75.94	0.00	0.00	0.00
7,200.00	1.00	30.00	7,199.14	85.40	49.30	-77.31	0.00	0.00	0.00
7,300.00	1.00	30.00	7,299.13	86.91	50.18	-78.68	0.00	0.00	0.00
7,400.00	1.00	30.00	7,399.11	88.42	51.05	-80.05	0.00	0.00	0.00
7,500.00	1.00	30.00	7,499.10	89.93	51.92	-81.41	0.00	0.00	0.00
7,600.00	1.00	30.00	7,599.08	91.44	52.79	-82.78	0.00	0.00	0.00
7,700.00	1.00	30.00	7,699.07	92.95	53.67	-84.15	0.00	0.00	0.00
7,800.00	1.00	30.00	7,799.05	94.46	54.54	-85.52	0.00	0.00	0.00
7,900.00	1.00	30.00	7,899.04	95.98	55.41	-86.89	0.00	0.00	0.00
8,000.00	1.00	30.00	7,999.02	97.49	56.28	-88.26	0.00	0.00	0.00
8,100.00	1.00	30.00	8,099.01	99.00	57.16	-89.62	0.00	0.00	0.00
8,200.00	1.00	30.00	8,198.99	100.51	58.03	-90.99	0.00	0.00	0.00
8,211.01	1.00	30.00	8,210.00	100.68	58.13	-91.14	0.00	0.00	0.00
Bone Spring									
8,300.00	1.00	30.00	8,298.97	102.02	58.90	-92.36	0.00	0.00	0.00
8,400.00	1.00	30.00	8,398.96	103.53	59.77	-93.73	0.00	0.00	0.00
8,500.00	1.00	30.00	8,498.94	105.04	60.65	-95.10	0.00	0.00	0.00
8,600.00	1.00	30.00	8,598.93	106.56	61.52	-96.47	0.00	0.00	0.00
8,700.00	1.00	30.00	8,698.91	108.07	62.39	-97.83	0.00	0.00	0.00

Database:	HOPSPP	**Local Co-ordinate Reference:**	Well Patton MDP1 17 Federal 4H
Company:	ENGINEERING DESIGNS	**TVD Reference:**	WELL @ 3567.20ft (Original Well Elev)
Project:	PRD NM DIRECTIONAL PLANS (NAD 1983)	**MD Reference:**	WELL @ 3567.20ft (Original Well Elev)
Site:	Patton MDP1 17 Federal	**North Reference:**	Grid
Well:	Patton MDP1 17 Federal 4H	**Survey Calculation Method:**	Minimum Curvature
Wellbore:	WB00		
Design:	Permitting Plan		

Planned Survey

Measured Depth (ft)	Inclination (°)	Azimuth (°)	Vertical Depth (ft)	+N/-S (ft)	+E/-W (ft)	Vertical Section (ft)	Dogleg Rate (°/100ft)	Build Rate (°/100ft)	Turn Rate (°/100ft)
8,800.00	1.00	30.00	8,798.90	109.58	63.26	-99.20	0.00	0.00	0.00
8,900.00	1.00	30.00	8,898.88	111.09	64.14	-100.57	0.00	0.00	0.00
9,000.00	1.00	30.00	8,998.87	112.60	65.01	-101.94	0.00	0.00	0.00
9,100.00	1.00	30.00	9,098.85	114.11	65.88	-103.31	0.00	0.00	0.00
9,200.00	1.00	30.00	9,198.84	115.62	66.76	-104.67	0.00	0.00	0.00
9,224.17	1.00	30.00	9,223.00	115.99	66.97	-105.01	0.00	0.00	0.00
1st Bone Spring									
9,300.00	1.00	30.00	9,298.82	117.14	67.63	-106.04	0.00	0.00	0.00
9,400.00	1.00	30.00	9,398.81	118.65	68.50	-107.41	0.00	0.00	0.00
9,500.00	1.00	30.00	9,498.79	120.16	69.37	-108.78	0.00	0.00	0.00
9,511.21	1.00	30.00	9,510.00	120.33	69.47	-108.93	0.00	0.00	0.00
2nd Bone Spring									
9,541.00	1.00	30.00	9,539.79	120.78	69.73	-109.34	0.00	0.00	0.00
Build & Turn DLS 10.00 TFO 102.01									
9,600.00	5.78	122.30	9,598.68	119.64	72.50	-107.81	10.00	8.09	156.43
9,700.00	15.72	128.54	9,696.81	108.48	87.39	-94.60	10.00	9.95	6.24
9,800.00	25.71	129.98	9,790.23	86.04	114.67	-68.44	10.00	9.99	1.45
9,900.00	35.70	130.65	9,876.10	53.01	153.53	-30.10	10.00	9.99	0.67
10,000.00	45.70	131.06	9,951.81	10.39	202.78	19.24	10.00	10.00	0.41
10,100.00	55.70	131.35	10,015.07	-40.53	260.91	78.08	10.00	10.00	0.29
10,200.00	65.70	131.57	10,063.95	-98.20	326.18	144.64	10.00	10.00	0.23
10,300.00	75.69	131.77	10,096.97	-160.87	396.58	216.88	10.00	10.00	0.19
10,400.00	85.69	131.94	10,113.12	-226.63	470.00	292.63	10.00	10.00	0.18
10,442.06	89.90	132.01	10,114.74	-254.73	501.23	324.98	10.00	10.00	0.17
Hold Tangent									
10,500.00	89.90	132.01	10,114.84	-293.51	544.28	369.62	0.00	0.00	0.00
10,576.17	89.90	132.01	10,114.98	-344.49	600.88	428.29	0.00	0.00	0.00
Build & Turn DLS 10.00 TFO 89.78									
10,600.00	89.91	134.40	10,115.02	-360.81	618.24	446.96	10.00	0.04	10.00
10,700.00	89.95	144.40	10,115.14	-436.63	683.24	531.44	10.00	0.04	10.00
10,800.00	89.99	154.40	10,115.20	-522.59	734.09	623.89	10.00	0.04	10.00
10,900.00	90.03	164.40	10,115.18	-616.08	769.24	721.49	10.00	0.04	10.00
11,000.00	90.08	174.40	10,115.08	-714.25	787.62	821.29	10.00	0.04	10.00
11,053.42	90.10	179.74	10,115.00	-767.58	790.35	874.45	10.00	0.04	10.00
Landing Point									
11,100.00	90.10	179.74	10,114.92	-814.16	790.56	920.56	0.00	0.00	0.00
11,200.00	90.10	179.74	10,114.75	-914.15	791.02	1,019.56	0.00	0.00	0.00
11,300.00	90.10	179.74	10,114.59	-1,014.15	791.48	1,118.56	0.00	0.00	0.00
11,400.00	90.10	179.74	10,114.42	-1,114.15	791.94	1,217.57	0.00	0.00	0.00
11,500.00	90.10	179.74	10,114.25	-1,214.15	792.39	1,316.57	0.00	0.00	0.00
11,600.00	90.10	179.74	10,114.08	-1,314.15	792.85	1,415.57	0.00	0.00	0.00
11,700.00	90.10	179.74	10,113.91	-1,414.15	793.31	1,514.57	0.00	0.00	0.00
11,800.00	90.10	179.74	10,113.74	-1,514.15	793.77	1,613.57	0.00	0.00	0.00
11,900.00	90.10	179.74	10,113.57	-1,614.15	794.22	1,712.57	0.00	0.00	0.00
12,000.00	90.10	179.74	10,113.41	-1,714.15	794.68	1,811.57	0.00	0.00	0.00
12,100.00	90.10	179.74	10,113.24	-1,814.14	795.14	1,910.57	0.00	0.00	0.00
12,200.00	90.10	179.74	10,113.07	-1,914.14	795.60	2,009.57	0.00	0.00	0.00
12,300.00	90.10	179.74	10,112.90	-2,014.14	796.06	2,108.57	0.00	0.00	0.00
12,400.00	90.10	179.74	10,112.73	-2,114.14	796.51	2,207.57	0.00	0.00	0.00
12,500.00	90.10	179.74	10,112.56	-2,214.14	796.97	2,306.57	0.00	0.00	0.00
12,600.00	90.10	179.74	10,112.40	-2,314.14	797.43	2,405.57	0.00	0.00	0.00
12,700.00	90.10	179.74	10,112.23	-2,414.14	797.89	2,504.57	0.00	0.00	0.00
12,800.00	90.10	179.74	10,112.06	-2,514.14	798.34	2,603.57	0.00	0.00	0.00

Database:	HOPSPP	**Local Co-ordinate Reference:**	Well Patton MDP1 17 Federal 4H
Company:	ENGINEERING DESIGNS	**TVD Reference:**	WELL @ 3567.20ft (Original Well Elev)
Project:	PRD NM DIRECTIONAL PLANS (NAD 1983)	**MD Reference:**	WELL @ 3567.20ft (Original Well Elev)
Site:	Patton MDP1 17 Federal	**North Reference:**	Grid
Well:	Patton MDP1 17 Federal 4H	**Survey Calculation Method:**	Minimum Curvature
Wellbore:	WB00		
Design:	Permitting Plan		

Planned Survey

Measured Depth (ft)	Inclination (°)	Azimuth (°)	Vertical Depth (ft)	+N/-S (ft)	+E/-W (ft)	Vertical Section (ft)	Dogleg Rate (°/100ft)	Build Rate (°/100ft)	Turn Rate (°/100ft)
12,900.00	90.10	179.74	10,111.89	-2,614.13	798.80	2,702.57	0.00	0.00	0.00
13,000.00	90.10	179.74	10,111.72	-2,714.13	799.26	2,801.57	0.00	0.00	0.00
13,100.00	90.10	179.74	10,111.55	-2,814.13	799.72	2,900.57	0.00	0.00	0.00
13,200.00	90.10	179.74	10,111.39	-2,914.13	800.17	2,999.57	0.00	0.00	0.00
13,300.00	90.10	179.74	10,111.22	-3,014.13	800.63	3,098.57	0.00	0.00	0.00
13,400.00	90.10	179.74	10,111.05	-3,114.13	801.09	3,197.57	0.00	0.00	0.00
13,500.00	90.10	179.74	10,110.88	-3,214.13	801.55	3,296.57	0.00	0.00	0.00
13,600.00	90.10	179.74	10,110.71	-3,314.13	802.01	3,395.57	0.00	0.00	0.00
13,700.00	90.10	179.74	10,110.54	-3,414.13	802.46	3,494.57	0.00	0.00	0.00
13,800.00	90.10	179.74	10,110.38	-3,514.12	802.92	3,593.57	0.00	0.00	0.00
13,900.00	90.10	179.74	10,110.21	-3,614.12	803.38	3,692.57	0.00	0.00	0.00
14,000.00	90.10	179.74	10,110.04	-3,714.12	803.84	3,791.57	0.00	0.00	0.00
14,100.00	90.10	179.74	10,109.87	-3,814.12	804.29	3,890.57	0.00	0.00	0.00
14,200.00	90.10	179.74	10,109.70	-3,914.12	804.75	3,989.57	0.00	0.00	0.00
14,300.00	90.10	179.74	10,109.53	-4,014.12	805.21	4,088.57	0.00	0.00	0.00
14,400.00	90.10	179.74	10,109.37	-4,114.12	805.67	4,187.57	0.00	0.00	0.00
14,500.00	90.10	179.74	10,109.20	-4,214.12	806.13	4,286.57	0.00	0.00	0.00
14,600.00	90.10	179.74	10,109.03	-4,314.11	806.58	4,385.57	0.00	0.00	0.00
14,700.00	90.10	179.74	10,108.86	-4,414.11	807.04	4,484.57	0.00	0.00	0.00
14,800.00	90.10	179.74	10,108.69	-4,514.11	807.50	4,583.57	0.00	0.00	0.00
14,900.00	90.10	179.74	10,108.52	-4,614.11	807.96	4,682.58	0.00	0.00	0.00
15,000.00	90.10	179.74	10,108.36	-4,714.11	808.41	4,781.58	0.00	0.00	0.00
15,100.00	90.10	179.74	10,108.19	-4,814.11	808.87	4,880.58	0.00	0.00	0.00
15,200.00	90.10	179.74	10,108.02	-4,914.11	809.33	4,979.58	0.00	0.00	0.00
15,300.00	90.10	179.74	10,107.85	-5,014.11	809.79	5,078.58	0.00	0.00	0.00
15,400.00	90.10	179.74	10,107.68	-5,114.10	810.24	5,177.58	0.00	0.00	0.00
15,500.00	90.10	179.74	10,107.51	-5,214.10	810.70	5,276.58	0.00	0.00	0.00
15,600.00	90.10	179.74	10,107.35	-5,314.10	811.16	5,375.58	0.00	0.00	0.00
15,700.00	90.10	179.74	10,107.18	-5,414.10	811.62	5,474.58	0.00	0.00	0.00
15,800.00	90.10	179.74	10,107.01	-5,514.10	812.08	5,573.58	0.00	0.00	0.00
15,805.32	90.10	179.74	10,107.00	-5,519.42	812.10	5,578.84	0.00	0.00	0.00

TD at 15805.32

Design Targets

Target Name - hit/miss target - Shape	Dip Angle (°)	Dip Dir. (°)	TVD (ft)	+N/-S (ft)	+E/-W (ft)	Northing (usft)	Easting (usft)	Latitude	Longitude
P17_4H_BHL - plan hits target center - Point	0.00	0.00	10,107.00	-5,519.42	812.10	440,761.52	706,768.81	32° 12' 38.155464 N	103° 47' 54.385975
FTP - plan hits target center - Point	0.00	0.00	10,115.00	-767.58	790.35	445,513.07	706,747.06	32° 13' 25.176179 N	103° 47' 54.363861
Interp @ 10115.46 - plan misses target center by 1.01ft at 11378.75ft MD (10114.45 TVD, -1092.91 N, 791.84 E) - Point	0.00	0.00	10,115.46	-1,092.91	791.84	445,187.76	706,748.54	32° 13' 21.956964 N	103° 47' 54.365393

Database:	HOPSPP	**Local Co-ordinate Reference:**	Well Patton MDP1 17 Federal 4H
Company:	ENGINEERING DESIGNS	**TVD Reference:**	WELL @ 3567.20ft (Original Well Elev)
Project:	PRD NM DIRECTIONAL PLANS (NAD 1983)	**MD Reference:**	WELL @ 3567.20ft (Original Well Elev)
Site:	Patton MDP1 17 Federal	**North Reference:**	Grid
Well:	Patton MDP1 17 Federal 4H	**Survey Calculation Method:**	Minimum Curvature
Wellbore:	WB00		
Design:	Permitting Plan		

Formations

Measured Depth (ft)	Vertical Depth (ft)	Name	Lithology	Dip (°)	Dip Direction (°)
677.00	677.00	Rustler			
1,047.00	1,047.00	Salado			
2,857.20	2,857.00	Castile Anhydrite			
4,377.43	4,377.00	Delaware			
4,410.43	4,410.00	Bell Canyon			
5,173.55	5,173.00	Cherry Canyon			
6,525.76	6,525.00	Brushy Canyon			
8,211.01	8,210.00	Bone Spring			
9,224.17	9,223.00	1st Bone Spring		0.00	
9,511.21	9,510.00	2nd Bone Spring		0.00	

Plan Annotations

Measured Depth (ft)	Vertical Depth (ft)	Local Coordinates +N/-S (ft)	Local Coordinates +E/-W (ft)	Comment
1,500.00	1,500.00	0.00	0.00	Nudge away from other wells at TFO 30°
1,600.00	1,599.99	0.76	0.44	Allow BHA to walk at TFO 30°
9,541.00	9,539.79	120.78	69.73	Build & Turn DLS 10.00 TFO 102.01
10,442.06	10,114.74	-254.73	501.23	Hold Tangent
10,576.17	10,114.98	-344.49	600.88	Build & Turn DLS 10.00 TFO 89.78
11,053.42	10,115.00	-767.58	790.35	Landing Point
15,805.32	10,107.00	-5,519.42	812.10	TD at 15805.32

Project: PRD NM DIRECTIONAL PLANS
Site: Patton MDP1 17 Federal
Well: Patton MDP1 17 Federal 4H
Wellbore: WB00
Design: Permitting Plan

WELL DETAILS: Patton MDP1 17 Federal 4H

Ground Level: 3540.70 — WELL @ 3567.20ft (Original Well Elev)

+N/-S	+E/-W	Northing	Easting	Latittude	Longitude
0.00	0.00	446280.60	705956.76	32° 13' 32.810215 N	103° 48' 3.519626 W

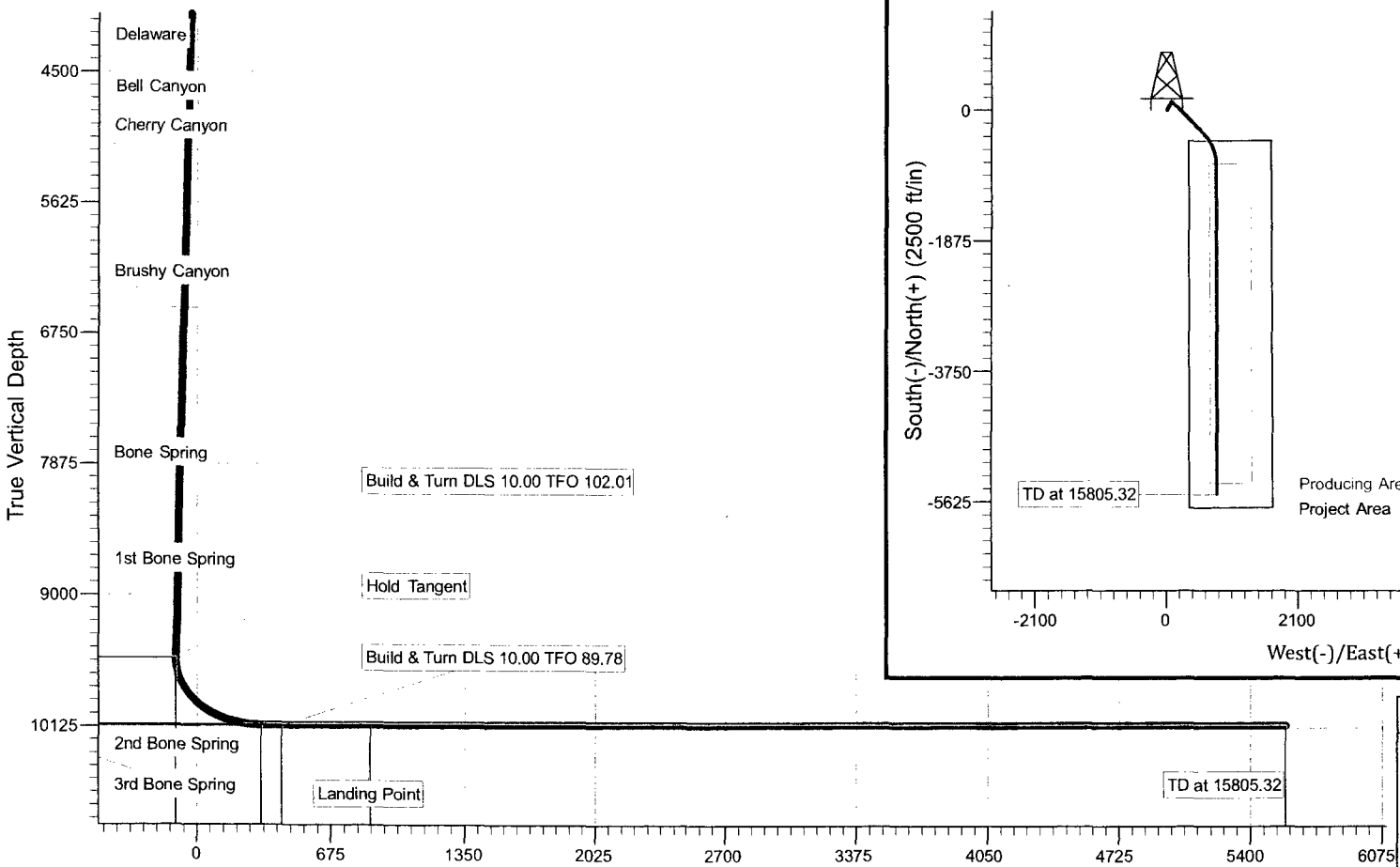

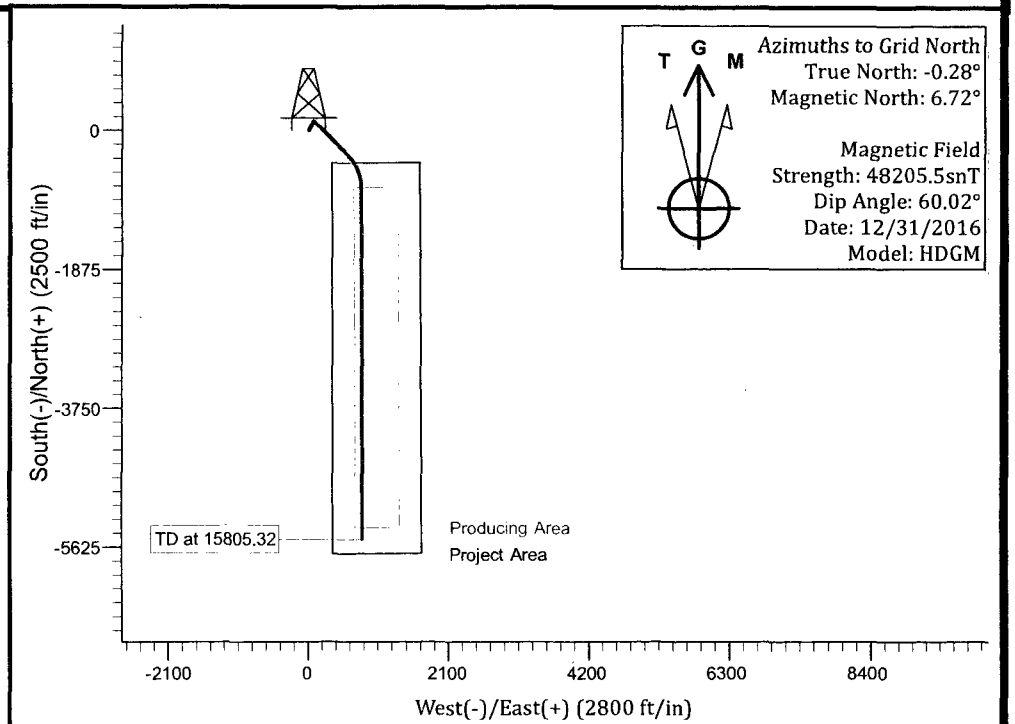

PROJECT DETAILS:NM DIRECTIONAL PLANS (NAD 1983)

Geodetic System: US State Plane 1983
Datum: North American Datum 1983
Ellipsoid: GRS 1980
Zone: New Mexico Eastern Zone

System Datum: Mean Sea Level

SECTION DETAILS

Sec	MD	Inc	Azi	TVD	+N/-S	+E/-W	Dleg	TFace	VSect	Target	Annotation
1	0.00	0.00	0.00	0.00	0.00	0.00	0.00	0.00	0.00		
2	1500.00	0.00	0.00	1500.00	0.00	0.00	0.00	0.00	0.00		Nudge away from other wells at TFO 30°
3	1600.00	1.00	30.00	1599.99	0.76	0.44	1.00	30.00	-0.68		Allow BHA to walk at TFO 30°
4	9541.00	1.00	30.00	9539.79	120.78	69.73	0.00	0.00	-109.34		Build & Turn DLS 10.00 TFO 102.01
5	10442.06	89.90	132.01	10114.74	-254.73	501.23	10.00	102.01	324.98		Hold Tangent
6	10576.17	89.90	132.01	10114.98	-344.49	600.87	0.00	0.00	428.29		Build & Turn DLS 10.00 TFO 89.78
7	11053.42	90.10	179.74	10115.00	-767.58	790.35	10.00	89.78	874.45		Landing Point
8	15805.32	90.10	179.74	10107.00	-5519.42	812.10	0.00	0.00	5578.85		TD at 15805.32

OXY USA Inc
APD ATTACHMENT: SPUDDER RIG DATA

OPERATOR NAME / NUMBER: OXY USA Inc

1. SUMMARY OF REQUEST:

Oxy USA respectfully requests approval for the following operations for the surface hole in the drill plan:

1. Utilize a spudder rig to pre-set surface casing for time and cost savings.

2. Description of Operations

1. Spudder rig will move in to drill the surface hole and pre-set surface casing on the well.
    - **a.** After drilling the surface hole section, the spudder rig will run casing and cement following all of the applicable rules and regulations (OnShore Order 2, all COAs and NMOCD regulations).
    - **b.** The spudder rig will utilize fresh water-based mud to drill the surface hole to TD. Solids control will be handled entirely on a closed loop basis. No earth pits will be used.
2. The wellhead will be installed and tested as soon as the surface casing is cut off and the WOC time has been reached.
3. A blind flange at the same pressure rating as the wellhead will be installed to seal the wellbore. Pressure will be monitored with needle valves installed on two wingvalves.
    - **a.** A means for intervention will be maintained while the drilling rig is not over the well.
4. Spudder rig operations are expected to take 2-3 days per well on the pad.
5. The BLM will be contacted and notified 24 hours prior to commencing spudder rig operations.
6. Drilling operations will begin with a larger rig and a BOP stack equal to or greater than the pressure rating that was permitted will be nippled up and tested on the wellhead before drilling operations resume on each well.
    - **a.** The larger rig will move back onto the location within 90 days from the point at which the wells are secured and the spudder rig is moved off location.
    - **b.** The BLM will be contacted / notified 24 hours before the larger rig moves back on the pre-set locations.
7. Oxy will have supervision on the rig to ensure compliance with all BLM and NMOCD regulations and to oversee operations.
8. Once the rig is removed, Oxy will secure the wellhead area by placing a guard rail around the cellar area.

Spudder Rig Layout

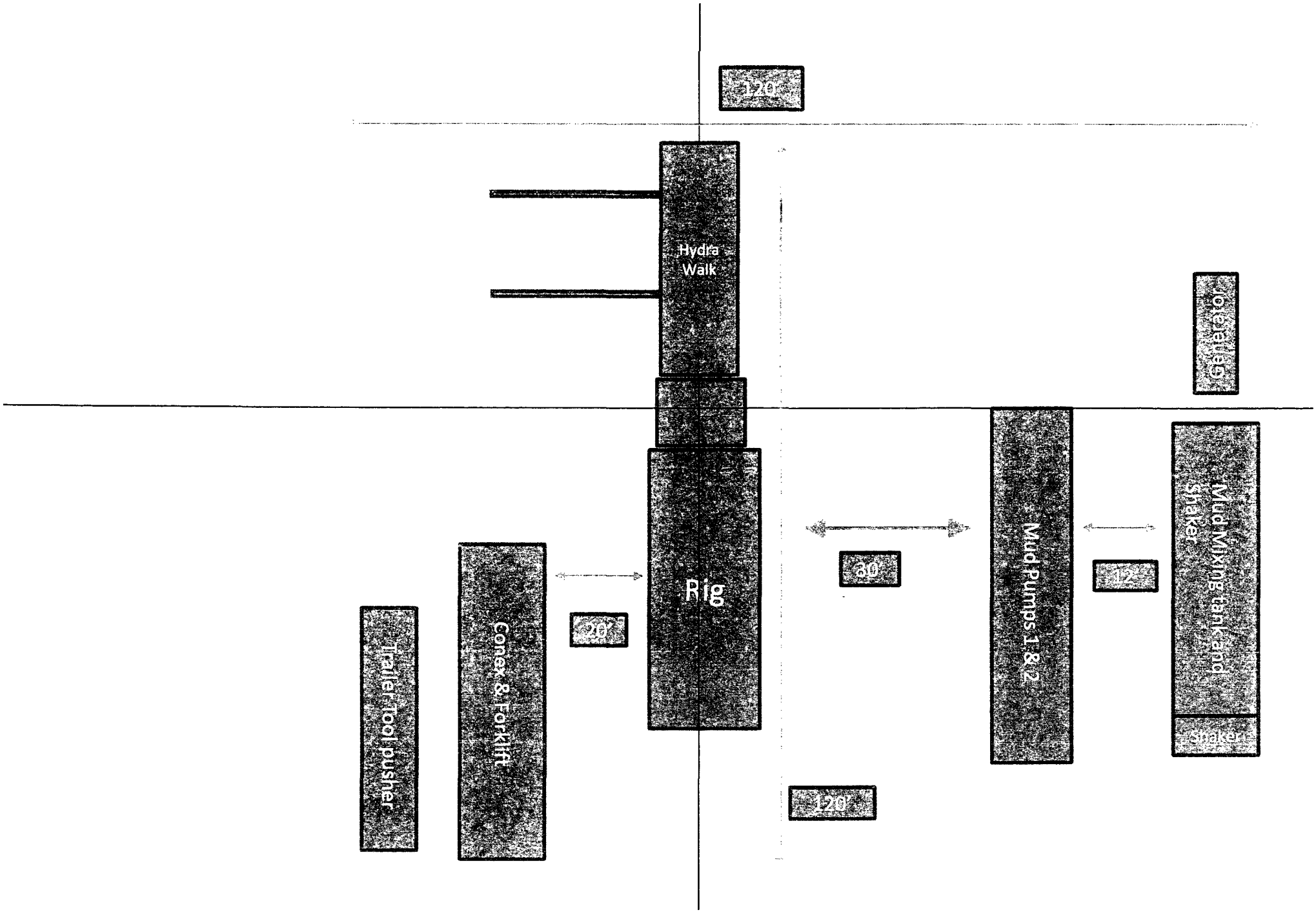

OXY USA Inc. - Patton MDP1 17 Federal 4H

1. Geologic Formations

TVD of target	10115'	Pilot Hole Depth	N/A
MD at TD:	15805'	Deepest Expected fresh water:	677'

Delaware Basin

Formation	TVD - RKB	Expected Fluids
Rustler	677	Brine
Salado	1047	Brine / Losses
Castile	2857	
Lamar/Delaware	4377	
Bell Canyon*	4410	Brine
Cherry Canyon*	5173	Oil/Gas
Brushy Canyon*	6525	Oil/Gas
Bone Spring	8210	Oil/Gas
1st Bone Spring	9223	Oil/Gas
2nd Bone Spring	**9510**	**Oil/Gas**

*H2S, water flows, loss of circulation, abnormal pressures, etc.

2. Casing Program

Hole Size (in)	Casing Interval From (ft)	Casing Interval To (ft)	Csg. Size (in)	Weight (lbs)	Grade	Conn.	SF Collapse	SF Burst	Buoyant Body SF Tension	Buoyant Joint SF Tension
17.5	0	727	13.375	54.5	J55	BTC	6.23	1.33	2.44	2.61
12.25	0	4427	9.625	36	J55	BTC	2.32	1.40	1.99	2.27
8.5	0	15805	5.5	20	P-110	DQX	2.09	1.28	2.21	2.39

All casing strings will be tested in accordance with Onshore Oil and Gas Order #2 III.B.1.h
*Oxy requests the option to set casing shallower yet still below the salts if losses or hole conditions require this. Cement volumes may be adjusted if casing is set shallower and a DV tool may be run in case hole conditions merit pumping a second stage cement job to comply with permitted top of cement. If cement circulated to surface during first stage we will drop a cancelation cone and not pump the second stage.

	Y or N
Is casing new? If used, attach certification as required in Onshore Order #1	Y
Does casing meet API specifications? If no, attach casing specification sheet.	Y
Is premium or uncommon casing planned? If yes attach casing specification sheet.	Y
Does the above casing design meet or exceed BLM's minimum standards? If not provide justification (loading assumptions, casing design criteria).	Y
Will the intermediate pipe be kept at a minimum 1/3 fluid filled to avoid approaching the collapse pressure rating of the casing?	Y

Is well located within Capitan Reef?	N
If yes, does production casing cement tie back a minimum of 50' above the Reef?	
Is well within the designated 4 string boundary.	
Is well located in SOPA but not in R-111-P?	Y
If yes, are the first 2 strings cemented to surface and 3rd string cement tied back 500' into previous casing?	Y
Is well located in R-111-P and SOPA?	N
If yes, are the first three strings cemented to surface?	
Is 2nd string set 100' to 600' below the base of salt?	
Is well located in high Cave/Karst?	N
If yes, are there two strings cemented to surface?	
(For 2 string wells) If yes, is there a contingency casing if lost circulation occurs?	
Is well located in critical Cave/Karst?	N
If yes, are there three strings cemented to surface?	

3. Cementing Program

Casing	# Sks	Wt. (lb/gal)	Yld (ft3/sack)	H20 (gal/sk)	500# Comp. Strength (hours)	Slurry Description
Surface	473	14.2	1.68	6.53	6:50	Class C Cement, Accelerator
Intermediate Casing	1160	12.9	1.74	8.67	15:07	Pozzolan Cement, Retarder
	156	14.8	1.326	6.34	6:31	Class C Cement, Retarder, Dispersant, Salt
Production Casing	650	10.2	3.057	15.65	19:09	Class C Cement
	1096	13.2	1.631	8.37	15:15	Class H Cement, Retarder, Dispersant, Salt

Casing String	Top of Lead (ft)	Bottom of Lead (ft)	Top of Tail (ft)	Bottom of Tail (ft)	% Excess Lead	% Excess Tail
Surface	N/A	N/A	0	727	N/A	50%
Intermediate Casing	0	3927	3927	4427	75%	20%
Production Casing	3927	9041	9041	15805	75%	15%

4. Pressure Control Equipment

BOP installed and tested before drilling which hole?	Size?	Min. Required WP	Type	✓	Tested to:
12.25" Hole	13-5/8"	5M	Annular	✓	70% of working pressure
			Blind Ram	✓	250/5000psi
			Pipe Ram		
			Double Ram	✓	
			Other*		

*Specify if additional ram is utilized.

BOP/BOPE will be tested by an independent service company to 250 psi low and the high pressure indicated above per Onshore Order 2 requirements. The System may be upgraded to a higher pressure but still tested to the working pressure listed in the table above. If the system is upgraded all the components installed will be functional and tested.

Pipe rams will be operationally checked each 24 hour period. Blind rams will be operationally checked on each trip out of the hole. These checks will be noted on the daily tour sheets. Other accessories to the BOP equipment will include a Kelly cock and floor safety valve (inside BOP) and choke lines and choke manifold. See attached schematics.

	Formation integrity test will be performed per Onshore Order #2. On Exploratory wells or on that portion of any well approved for a 5M BOPE system or greater, a pressure integrity test of each casing shoe shall be performed. Will be tested in accordance with Onshore Oil and Gas Order #2 III.B.1.i.	
	A variance is requested for the use of a flexible choke line from the BOP to Choke Manifold. See attached for specs and hydrostatic test chart.	
	Y	Are anchors required by manufacturer?
	A multibowl or a unionized multibowl wellhead system will be employed. The wellhead and connection to the BOPE will meet all API 6A requirements. The BOP will be tested per Onshore Order #2 after installation on the surface casing which will cover testing requirements for a maximum of 30 days. If any seal subject to test pressure is broken the system must be tested. We will test the flange connection of the wellhead with a test port that is directly in the flange. We are proposing that we will run the wellhead through the rotary prior to cementing surface casing as discussed with the BLM on October 8, 2015. See attached schematics.	

5. Mud Program

Depth		Type	Weight (ppg)	Viscosity	Water Loss
From (ft)	To (ft)				
0	727	Water-Based Mud	8.4-8.6	40-60	N/C
727	4427	Brine	9.8-10.0	35-45	N/C
4427	9541	Water-Based Mud	8.8-9.6	38-50	N/C
9541	15805	Oil-Based Mud	8.8-9.6	35-50	N/C

Sufficient mud materials to maintain mud properties and meet minimum lost circulation and weight increase requirements will be kept on location at all times. The following is a general list of products: Barite, Bentonite, Gypsum, Lime, Soda Ash, Caustic Soda, Nut Plug, Cedar Fiber, Cotton Seed Hulls, Drilling Paper, Salt Water Clay, CACL2. Oxy will use a closed mud system.

What will be used to monitor the loss or gain of fluid?	PVT/MD Totco/Visual Monitoring

6. Logging and Testing Procedures

Logging, Coring and Testing.	
Yes	Will run GR from TD to surface (horizontal well – vertical portion of hole). Stated logs run will be in the Completion Report and submitted to the BLM.
No	Logs are planned based on well control or offset log information.
No	Drill stem test? If yes, explain
No	Coring? If yes, explain

Additional logs planned		Interval
No	Resistivity	
No	Density	
No	CBL	
Yes	Mud log	ICP - TD
No	PEX	

7. Drilling Conditions

Condition	Specify what type and where?
BH Pressure at deepest TVD	5050 psi
Abnormal Temperature	No
BH Temperature at deepest TVD	161°F

Pump high viscosity sweeps as needed for hole cleaning. The mud system will be monitored visually/manually as well as with an electronic PVT. The necessary mud products for additional weight and fluid loss control will be on location at all times. Appropriately weighted mud will be used to isolate potential gas, oil, and water zones until such time as casing can be cemented into place for zonal isolation.

Hydrogen Sulfide (H2S) monitors will be installed prior to drilling out the surface shoe. If H2S is detected in concentrations greater than 100 ppm, the operator will comply with the provisions of Onshore Oil and Gas Order #6. If Hydrogen Sulfide is encountered, measured values and formations will be provided to the BLM.	
N	H2S is present
Y	H2S Plan attached

8. Other facets of operation

	Yes/No
Will the well be drilled with a walking/skidding operation? If yes, describe. • We plan to drill the four well pad in batch by section: all surface sections, intermediate sections and production sections. The wellhead will be secured with a night cap whenever the rig is not over the well.	Yes
Will more than one drilling rig be used for drilling operations? If yes, describe. • Oxy requests the option to contract a Surface Rig to drill, set surface casing, and cement for this well. If the timing between rigs is such that Oxy would not be able to preset surface, the Primary Rig will MIRU and drill the well in its entirety per the APD. Please see the attached document for information on the spudder rig.	Yes

Total estimated cuttings volume: 1554.2 bbls.

9. Company Personnel

Name	Title	Office Phone	Mobile Phone
Philippe Haffner	Drilling Engineer	713-985-6379	832-767-9047
Diego Tellez	Drilling Engineer Supervisor	713-350-4602	713-303-4932
Simon Benavides	Drilling Superintendent	713-522-8652	281-684-6897
John Willis	Drilling Manager	713-366-5556	713-259-1417

APD ID: 10400011940

Submission Date: 03/14/2017

Highlighted data reflects the most recent changes

Show Final Text

Operator Name: OXY USA INCORPORATED

Well Name: PATTON MDP1 17 FEDERAL

Well Number: 4H

Well Type: OIL WELL

Well Work Type: Drill

Section 1 - Existing Roads

Will existing roads be used? YES

Existing Road Map:

PattonMDP1-17Fd4H_ExistRoads_03-01-2017.pdf

Existing Road Purpose: FLUID TRANSPORT

Row(s) Exist? NO

ROW ID(s)

ID:

Do the existing roads need to be improved? NO

Existing Road Improvement Description:

Existing Road Improvement Attachment:

Section 2 - New or Reconstructed Access Roads

Will new roads be needed? YES

New Road Map:

PattonMDP1-17Fd4H_NewRoad_03-01-2017.pdf

New road type: LOCAL

Length: 1272 Feet

Width (ft.): 25

Max slope (%): 0

Max grade (%): 0

Army Corp of Engineers (ACOE) permit required? NO

ACOE Permit Number(s):

New road travel width: 14

New road access erosion control: Watershed Diversion every 200' if needed.

New road access plan or profile prepared? YES

New road access plan attachment:

PattonMDP1-17Fd4H_NewRoad_03-01-2017.pdf

Access road engineering design? NO

Access road engineering design attachment:

Access surfacing type: OTHER

Access topsoil source: ONSITE

Access surfacing type description: Caliche

Access onsite topsoil source depth: 0

Offsite topsoil source description:

Onsite topsoil removal process: If available

Access other construction information: None

Access miscellaneous information: The access road will run 531.9' northeast, continue 719' east and then 21.1' south through pasture to the nothwest corner of the pad.
Number of access turnouts: **Access turnout map:**

Drainage Control

New road drainage crossing: CULVERT

Drainage Control comments: Watershed Diversion every 200' if needed.

Road Drainage Control Structures (DCS) description: Watershed Diversion every 200' if needed.

Road Drainage Control Structures (DCS) attachment:

Access Additional Attachments

Additional Attachment(s):

Section 3 - Location of Existing Wells

Existing Wells Map? YES

Attach Well map:

PattonMDP1_17Fd4H_ExistWells_03-10-2017.pdf

Existing Wells description:

Section 4 - Location of Existing and/or Proposed Production Facilities

Submit or defer a Proposed Production Facilities plan? SUBMIT

Estimated Production Facilities description:

Production Facilities description: a. In the event the well is found productive, the Sand Dunes South Corridor CTB would be utilized and the necessary production equipment will be installed at the well site. See proposed facilities layout diagram. b. All flow lines will adhere to API standards. They will consist of 2 – 4" composite flowlines operating 75% MAWP, surface and 1 –6" steel gas lift supply line operating 1500 psig, buried, lines to follow surveyed route. Survey of a strip of land 30' wide and 4927.9' in length crossing USA Land in Sections 7, 8 & 18 T24S R31E, NMPM, Eddy County, NM and being 15' left and 15' right of the centerline survey, see attached. c. Electric line will follow a route approved by the BLM. Survey of a strip of land 30' wide and 5295.3' in length crossing USA Land in Section 8 T24S R31E NMPM, Eddy County, NM and being 15' left

and 15' right of the centerline survey, see attached. d. All of the Patton MDP1 17 Fed #1H, 2H, 3H, 4H, 5H, 6H will be routed to the Sand Dunes South Corridor CTB. Each well will have (2) surface laid flowlines operating at less than 75% of the MAWP of the flowline. The Sand Dunes South Corridor will be supported by centralized gas lift. The main gas lift compressors will be located on the pad of the Patton 18-3, directly adjacent to the Sand Dunes South Corridor CTB, and will be fed by a buried suction line from the Sand Dunes South Corridor CTB at low pressure. The discharge of the compressors at the Patton 18-3 will go into a common trunk line running the length of the South Corridor that will consist of (2) 12" high pressure gas lines. From the trunk line, there will be (1) 6" high pressure line running to each well. Additional gas lift compressors may be needed at the wellhead if higher injection pressures are required. See Attached.
Production Facilities map:

PattonMDP1_17Fd4H_FacilityPLEL_03-14-2017.pdf

PattonMDP1_17Fd4H_MasterFacGLL_03-14-2017.pdf

Section 5 - Location and Types of Water Supply

Water Source Table

Water source use type: INTERMEDIATE/PRODUCTION CASING, OTHER, SURFACE CASING **Water source type:** GW WELL
Describe type:

Source latitude: **Source longitude:**

Source datum:

Water source permit type: WATER WELL

Source land ownership: COMMERCIAL

Water source transport method: PIPELINE,TRUCKING

Source transportation land ownership: COMMERCIAL

Water source volume (barrels): 2000 **Source volume (acre-feet):** 0.25778618

Source volume (gal): 84000

Water source and transportation map:

PattonMDP1-17Fd4H_GRRWtrSrc_03-01-2017.pdf

PattonMDP1-17Fd4H_MesqWtrSrc_03-01-2017.pdf

Water source comments: This well will be drilled using a combination of water mud systems. It will be obtained from commercial water stations (Gregory Rockhouse, Mesquite) in the area and will be hauled to location by transport truck using existing and proposed roads.
New water well? NO

New Water Well Info

Well latitude: **Well Longitude:** **Well datum:**

Well target aquifer:

Est. depth to top of aquifer(ft): **Est thickness of aquifer:**

Aquifer comments:

Aquifer documentation:

Well depth (ft):

Well casing type:

Well casing outside diameter (in.):

Well casing inside diameter (in.):

New water well casing?

Used casing source:

Drilling method:

Drill material:

Grout material:

Grout depth:

Casing length (ft.):

Casing top depth (ft.):

Well Production type:

Completion Method:

Water well additional information:

State appropriation permit:

Additional information attachment:

Section 6 - Construction Materials

Construction Materials description: Primary - All caliche utilized for the drilling pad and proposed access road will be obtained from an existing BLM/State/Fee approved pit or from prevailing deposits found on the location. Will use BLM recommended extra caliche from other locations close by for roads, if available. Secondary - The secondary way of obtaining caliche to build locations and roads will be by "turning over" the location. This means, caliche will be obtained from the actual well site. A caliche permit will be obtained from BLM prior to pushing up any caliche. 2400 cubic yards is max amount of caliche needed for pad and roads. Amount will vary for each pad. The procedure below has been approved by BLM personnel: a. The top 6" of topsoil is pushed off and stockpiled along the side of the location. b. An approximate 120' X 120' area is used within the proposed well site to remove caliche. c. Subsoil is removed and piled alongside the 120' X 120' within the pad site. d. When caliche is found, material will be stockpiled within the pad site to build the location and road. e. Then subsoil is pushed back in the hole and caliche is spread accordingly across entire location and road. f. Once the well is drilled the stockpiled top soil will be used for interim reclamation and spread along areas where caliche is picked up and the location size is reduced. Neither caliche nor subsoil will be stockpiled outside of the well pad. Topsoil will be stockpiled along the edge of the pad. Caliche will be provided from a pit located in Section 7, T24S R31E. Water will be provided from a frac pond located in Section 7; T24S R31E.
Construction Materials source location attachment:

Section 7 - Methods for Handling Waste

Waste type: DRILLING

Waste content description: Water-Based Cuttings, Water-Based Mud, Oil-Based Cuttings, Oil-Based Mud, Produced Water

Amount of waste: 1554.5 barrels

Waste disposal frequency : Daily

Safe containment description: Haul-Off Bins

Safe containmant attachment:

Waste disposal type: HAUL TO COMMERCIAL FACILITY **Disposal location ownership:** COMMERCIAL
Disposal type description:

Disposal location description: An approved facility that can process drill cuttings, drill fluids, flowback water, produced water, contaminated soils, and other non-hazardous wastes.

Reserve Pit

Reserve Pit being used? NO

Temporary disposal of produced water into reserve pit?

Reserve pit length (ft.) **Reserve pit width (ft.)**

Reserve pit depth (ft.) **Reserve pit volume (cu. yd.)**

Is at least 50% of the reserve pit in cut?

Reserve pit liner

Reserve pit liner specifications and installation description

Cuttings Area

Cuttings Area being used? NO

Are you storing cuttings on location? YES

Description of cuttings location A closed loop system will be utilized consisting of above ground steel tanks and haul-off bins. Disposal of liquids, drilling fluids and cuttings will be disposed of at an approved facility.

Cuttings area length (ft.) **Cuttings area width (ft.)**

Cuttings area depth (ft.) **Cuttings area volume (cu. yd.)**

Is at least 50% of the cuttings area in cut?

WCuttings area liner

Cuttings area liner specifications and installation description

Section 8 - Ancillary Facilities

Are you requesting any Ancillary Facilities?: NO

Ancillary Facilities attachment:

Comments:

Section 9 - Well Site Layout

Well Site Layout Diagram:

PattonMDP1-17Fd4H_WellSiteCL_03-01-2017.pdf

Comments: V-Door-West - CL Tanks-South - 330' X 500' – 4 Well Pad

Section 10 - Plans for Surface Reclamation

Type of disturbance: NO NEW SURFACE DISTURBANCE

Recontouring attachment:

Drainage/Erosion control construction: Reclamation to be wind rowed as needed to control erosion

Drainage/Erosion control reclamation: Reclamation to be wind rowed as needed to control erosion

Wellpad long term disturbance (acres): 2.51 **Wellpad short term disturbance (acres):** 3.79

Access road long term disturbance (acres): 0.41 **Access road short term disturbance (acres):** 0.73

Pipeline long term disturbance (acres): 1.1312902 **Pipeline short term disturbance (acres):** 3.3938706

Other long term disturbance (acres): 0 **Other short term disturbance (acres):** 3.65

Total long term disturbance: 4.05129 **Total short term disturbance:** 11.56387

Reconstruction method: If the well is deemed commercially productive, caliche from the areas of the pad site not required for operations will be reclaimed. The original topsoil will be returned to the area of the drill pad not necessary to operate the well. These unused areas of the drill pad will be contoured, as close as possible, to match the original topography, and the area will be seeded with an approved BLM mixture to re-establish vegetation. After concluding the drilling and/or completion operations, if the well is found non-commercial, the caliche will be removed from the pad and transported to the original caliche pit or used for other drilling locations. The road will be reclaimed as directed by the BLM. The original topsoil will again be returned to the pad and contoured, as close as possible, to the original topography, and the area will be seeded with an approved BLM mixture to re-establish vegetation.
Topsoil redistribution: The original topsoil will be returned to the area of the drill pad not necessary to operate the well.

Soil treatment: To be determined by the BLM.

Existing Vegetation at the well pad: To be determined by the BLM at Onsite.

Existing Vegetation at the well pad attachment:

Existing Vegetation Community at the road: To be determined by the BLM at Onsite.

Existing Vegetation Community at the road attachment:

Existing Vegetation Community at the pipeline: To be determined by the BLM at Onsite.

Existing Vegetation Community at the pipeline attachment:

Existing Vegetation Community at other disturbances: To be determined by the BLM at Onsite.

Existing Vegetation Community at other disturbances attachment:

Non native seed used? NO

Non native seed description:

Seedling transplant description:

Will seedlings be transplanted for this project? NO

Seedling transplant description attachment:

Will seed be harvested for use in site reclamation? NO

Seed harvest description:

Seed harvest description attachment:

Seed Management

Seed Table

Seed type:

Seed source:

Seed name:

Source name:

Source address:

Source phone:

Seed cultivar:

Seed use location:

PLS pounds per acre:

Proposed seeding season:

Seed Summary

Total pounds/Acre:

Seed Type	Pounds/Acre

Seed reclamation attachment:

Operator Contact/Responsible Official Contact Info

First Name: JIM

Last Name: WILSON

Phone: (575)631-2442

Email: jim_wilson@oxy.com

Seedbed prep:

Seed BMP:

Seed method:

Existing invasive species? NO

Existing invasive species treatment description:

Existing invasive species treatment attachment:

Weed treatment plan description: To be determined by the BLM.

Weed treatment plan attachment:

Monitoring plan description: To be determined by the BLM.

Monitoring plan attachment:

Success standards: To be determined by the BLM.

Pit closure description: NA

Pit closure attachment:

Section 11 - Surface Ownership

Operator Name: OXY USA INCORPORATED

Well Name: PATTON MDP1 17 FEDERAL **Well Number:** 4H

Disturbance type: NEW ACCESS ROAD

Describe:

Surface Owner: BUREAU OF LAND MANAGEMENT

Other surface owner description:

BIA Local Office:

BOR Local Office:

COE Local Office:

DOD Local Office:

NPS Local Office:

State Local Office:

Military Local Office:

USFWS Local Office:

Other Local Office:

USFS Region:

USFS Forest/Grassland: **USFS Ranger District:**

Disturbance type: WELL PAD

Describe:

Surface Owner: BUREAU OF LAND MANAGEMENT

Other surface owner description:

BIA Local Office:

BOR Local Office:

COE Local Office:

DOD Local Office:

NPS Local Office:

State Local Office:

Military Local Office:

USFWS Local Office:

Other Local Office:

USFS Region:

USFS Forest/Grassland: **USFS Ranger District:**

Operator Name: OXY USA INCORPORATED

Well Name: PATTON MDP1 17 FEDERAL **Well Number:** 4H

Disturbance type: PIPELINE

Describe:

Surface Owner: BUREAU OF LAND MANAGEMENT

Other surface owner description:

BIA Local Office:

BOR Local Office:

COE Local Office:

DOD Local Office:

NPS Local Office:

State Local Office:

Military Local Office:

USFWS Local Office:

Other Local Office:

USFS Region:

USFS Forest/Grassland: **USFS Ranger District:**

Disturbance type: OTHER

Describe: Electric Line

Surface Owner: BUREAU OF LAND MANAGEMENT

Other surface owner description:

BIA Local Office:

BOR Local Office:

COE Local Office:

DOD Local Office:

NPS Local Office:

State Local Office:

Military Local Office:

USFWS Local Office:

Other Local Office:

USFS Region:

USFS Forest/Grassland: **USFS Ranger District:**

Section 12 - Other Information

Right of Way needed? YES **Use APD as ROW?** YES

ROW Type(s): 281001 ROW - ROADS,285003 ROW – POWER TRANS,288100 ROW – O&G Pipeline,289001 ROW- O&G Well Pad

ROW Applications

SUPO Additional Information: Permian Basin MOA - see attached SUPO and to be determined by BLM. GIS Shapefiles furnished upon request
Use a previously conducted onsite? NO

Previous Onsite information:

Other SUPO Attachment

PattonMDP1-17Fd4H_StakeNotice_03-01-2017.pdf
PattonMDP1-17Fd4H_GasCapPlan_03-01-2017.pdf
PattonMDP1-17Fd4H_MiscSvyPlats_03-01-2017.pdf
PattonMDP1_17Fd4H_SUPO_03-14-2017.pdf

OXY USA INC.
PATTON MDP1 "17" FEDERAL #4H
SITE PLAN

FAA PERMIT: NO

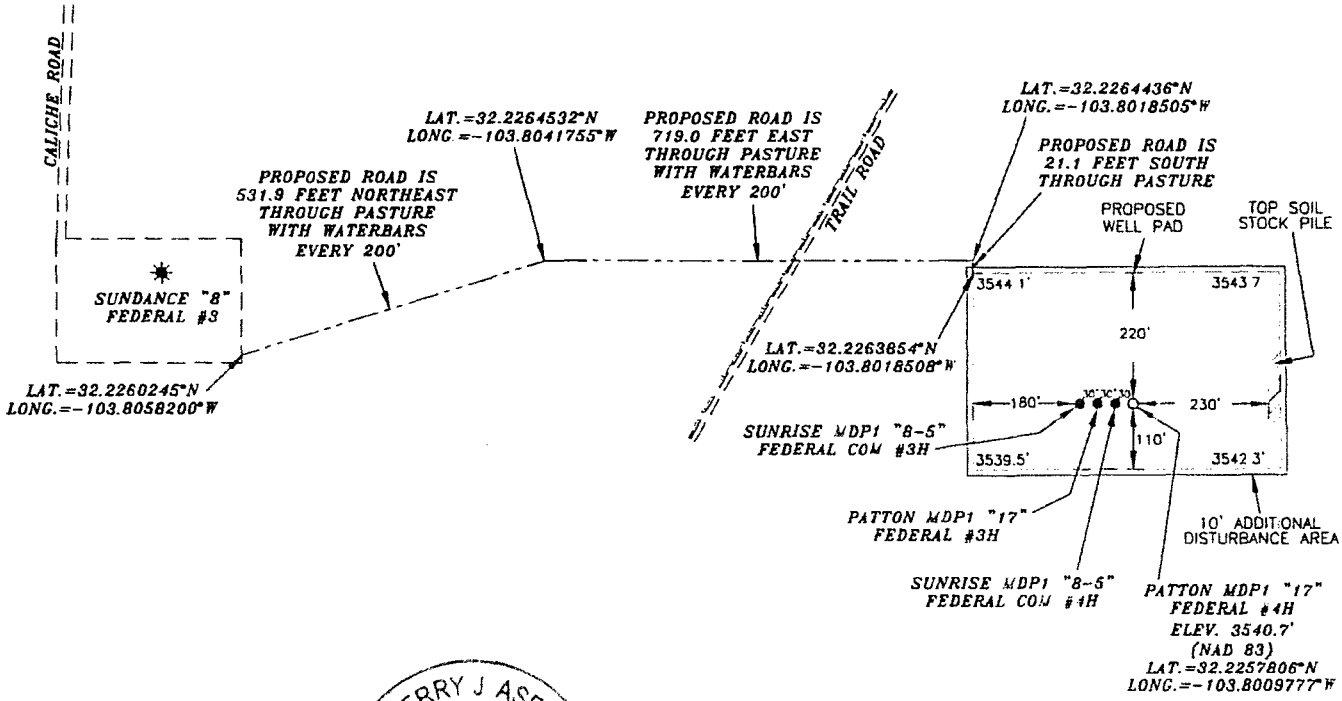

TERRY J ASEL
NEW MEXICO
15079
REGISTERED PROFESSIONAL LAND SURVEYOR

LEGEND

- DENOTES PROPOSED WELL PAD
- DENOTES PROPOSED ROAD
- DENOTES STOCK PILE AREA
- DENOTES EXISTING WELL

300' 0 300' 600' FEET

SCALE: 1"=300'

SURVEYORS CERTIFICATE

I, TERRY J. ASEL, NEW MEXICO PROFESSIONAL SURVEYOR NO. 15079, DO HEREBY CERTIFY THAT I CONDUCTED AND AM RESPONSIBLE FOR THIS SURVEY, THAT THIS SURVEY IS TRUE AND CORRECT TO THE BEST OF MY KNOWLEDGE AND BELIEF, AND MEETS THE "MINIMIUM STANDARDS FOR SURVEYING IN NEW MEXICO" AS ADOPTED BY THE NEW MEXICO STATE BOARD OF REGISTRATION FOR PROFESSIONAL ENGINEERS AND SURVEYORS.

Terry J. Asel 12/9/2016

Terry J. Asel N.M. R.P.L.S. No. 15079

Asel Surveying

P.O BOX 393 - 310 W TAYLOR
HOBBS, NEW MEXICO - 575-393-9146

OXY USA INC.		
PATTON MDP1 "17" FEDERAL #4H LOCATED AT 432' FSL & 2292' FWL IN SECTION 8, TOWNSHIP 24 SOUTH, RANGE 31 EAST, N.M.P.M., EDDY COUNTY, NEW MEXICO		
Survey Date: 10/07/16	Sheet 1 of 1 Sheets	
W.O. Number: 161007WL-c	Drawn By: KA	Rev:
Date: 11/02/16	161007WL-c	Scale:1"=300'

VICINITY MAP

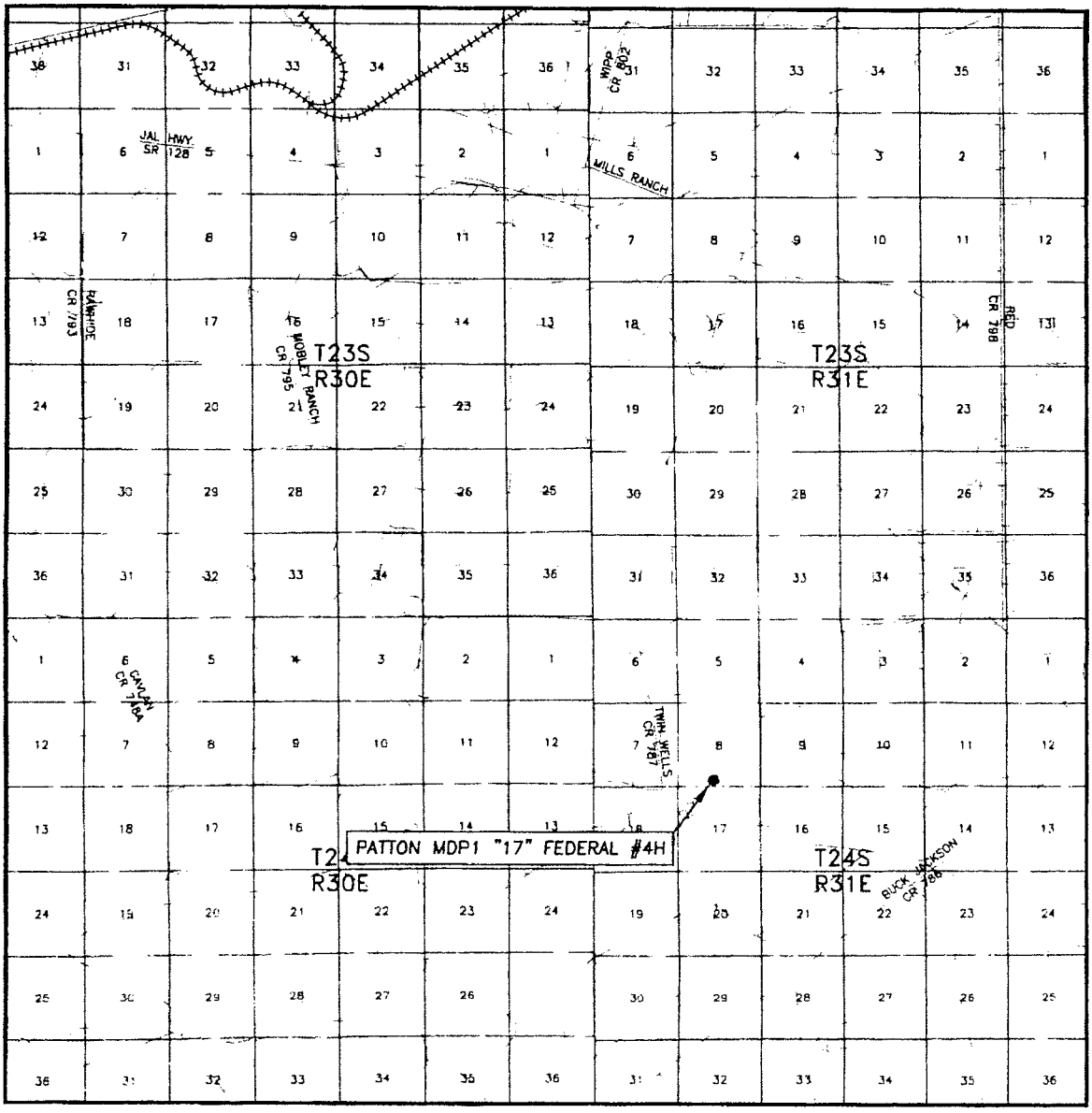

SEC. 8 TWP. 24-S RGE. 31-E

SURVEY N.M.P.M.

COUNTY EDDY

DESCRIPTION 432' FSL & 2292' FWL

ELEVATION 3540.7'

OPERATOR OXY USA INC.

LEASE FATTON MDP1 "17" FEDERAL #4H

SCALE: 1" = 2 MILES

Asel Surveying

P.O. BOX 393 - 310 W TAYLOR
HOBBS, NEW MEXICO - 575-393-9146

DIRECTIONS BEGINNING AT THE INTERSECTION OF N.M. STATE HWY #128 AND EDDY COUNTY ROAD #787 (TWIN WELLS ROAD), GO SOUTHEAST ON STATE HWY. #128 FOR 1.1 MILES, TURN RIGHT ON CALICHE ROAD AND GO SOUTH FOR 3.3 MILES, TURN RIGHT AND GO WEST FOR 0.7 MILES, TURN LEFT AND GO SOUTH FOR 0.2 MILES, GO SOUTHWEST FOR 0.4 MILES, GO SOUTH FOR 0.6 MILES, FROM THE SOUTHEAST CORNER OF EXISTING PAD GO NORTHEAST ON PROPOSED ROAD FOR 531.9 FEET, TURN RIGHT AND GO EAST FOR 719.0 FEET, TURN RIGHT AND GO SOUTH FOR 21.1 FEET TO LOCATION.

OXY USA INC.
PATTON MDP1 "17" FEDERAL #4H
SITE PLAN

FAA PERMIT: NO

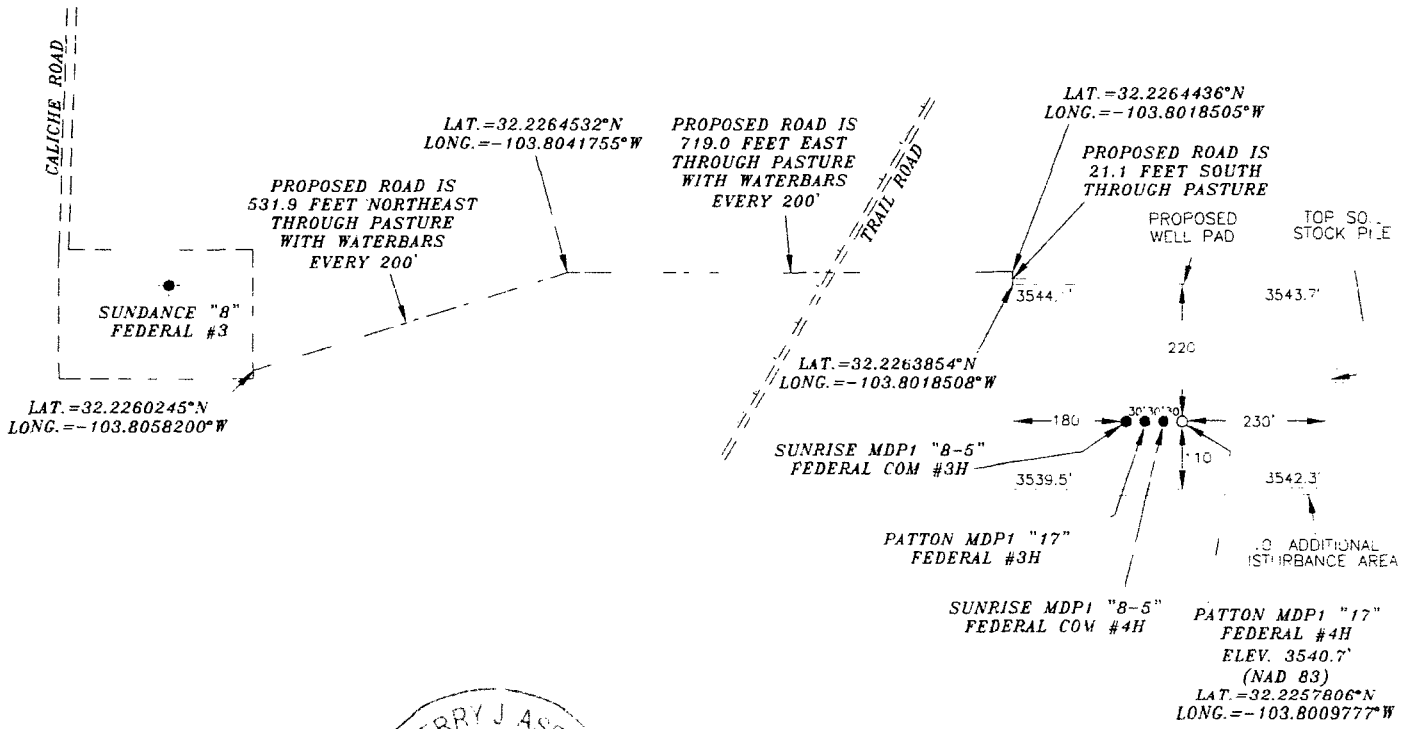

TERRY J. ASEL
NEW MEXICO
15079
REGISTERED PROFESSIONAL LAND SURVEYOR

LEGEND

DENOTES PROPOSED WELL PAD
DENOTES PROPOSED ROAD
DENOTES STOCK PILE AREA
DENOTES EXISTING WELL

300' 0 300' 600' FEET
SCALE 1"=300'

SURVEYORS CERTIFICATE

I, TERRY J. ASEL, NEW MEXICO PROFESSIONAL SURVEYOR NO. 15079, DO HEREBY CERTIFY THAT I CONDUCTED AND AM RESPONSIBLE FOR THIS SURVEY, THAT THIS SURVEY IS TRUE AND CORRECT TO THE BEST OF MY KNOWLEDGE AND BELIEF, AND MEETS THE "MINIMIUM STANDARDS FOR SURVEYING IN NEW MEXICO" AS ADOPTED BY THE NEW MEXICO STATE BOARD OF REGISTRATION FOR PROFESSIONAL ENGINEERS AND SURVEYORS.

Terry J. Asel 12/9/2016
Terry J. Asel N.M. R.P.L.S. No. 15079

Asel Surveying
P.O. BOX 393 - 310 W. TAYLOR
HOBBS, NEW MEXICO - 575-393-9146

OXY USA INC.		
PATTON MDP1 "17" FEDERAL #4H LOCATED AT 432' FSL & 2292' FWL IN SECTION 8, TOWNSHIP 24 SOUTH, RANGE 31 EAST, N.M.P.M., EDDY COUNTY, NEW MEXICO		
Survey Date: 10/07/16	Sheet 1 of 1 Sheets	
W.O. Number: 161007WL-c	Drawn By: KA	Rev:
Date: 11/02/16	161007WL-c	Scale: 1"=300'

OXY USA INC.
PATTON MDP1 "17" FEDERAL #4H
SITE PLAN

FAA PERMIT: NO

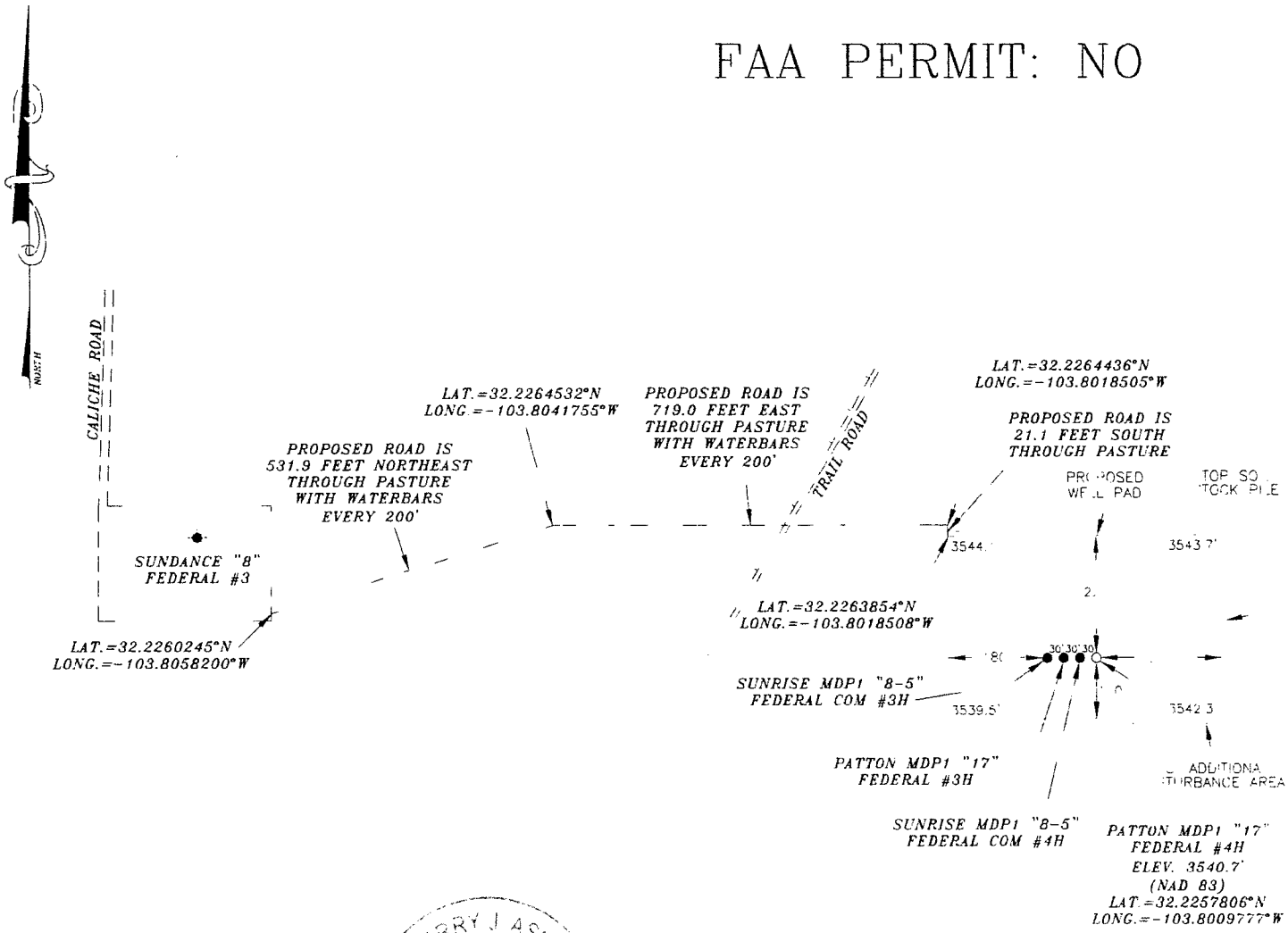

TERRY J. ASEL
NEW MEXICO
15079
REGISTERED PROFESSIONAL LAND SURVEYOR

LEGEND

DENOTES PROPOSED WELL PAD
DENOTES PROPOSED ROAD
DENOTES STOCK PILE AREA
DENOTES EXISTING WELL

300' 300' 600 FEET
SCALE 1"=300'

SURVEYORS CERTIFICATE

I, TERRY J. ASEL, NEW MEXICO PROFESSIONAL SURVEYOR NO. 15079, DO HEREBY CERTIFY THAT I CONDUCTED AND AM RESPONSIBLE FOR THIS SURVEY, THAT THIS SURVEY IS TRUE AND CORRECT TO THE BEST OF MY KNOWLEDGE AND BELIEF, AND MEETS THE "MINIMIUM STANDARDS FOR SURVEYING IN NEW MEXICO" AS ADOPTED BY THE NEW MEXICO STATE BOARD OF REGISTRATION FOR PROFESSIONAL ENGINEERS AND SURVEYORS.

Terry J. Asel 12/9/2016
Terry J. Asel, N.M. R.P.L.S. No. 15079

Asel Surveying
P.O. BOX 392 310 W. TAYLOR
HOBBS, NEW MEXICO 575-393-9146

OXY USA INC.		
PATTON MDP1 "17" FEDERAL #4H SITE PLAN AT 432' S & 2292' FWL IN SECTION 8 TOWNSHIP 24 SOUTH, RANGE 34 EAST N.M.P.M., LEA COUNTY, NEW MEXICO		
Survey Date: 09/06	Sheet of Sheets	
W.O. Number: 16-007WI	Drawn By:	Rev:
Date: 11/02/16	1610-007WI	Scale: 1"=3

Patton MDP1-17 Federal - 1 Mile AOR

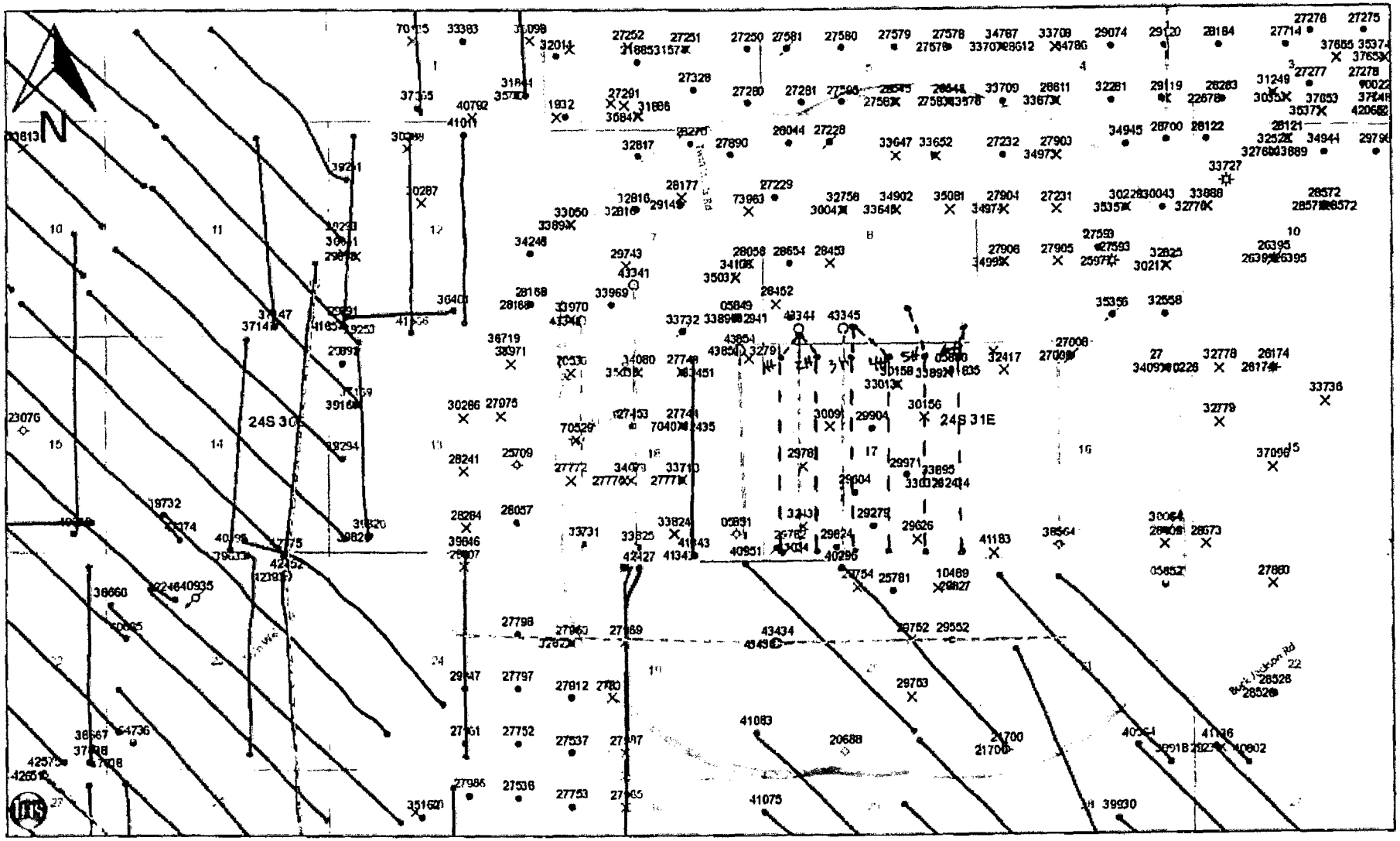

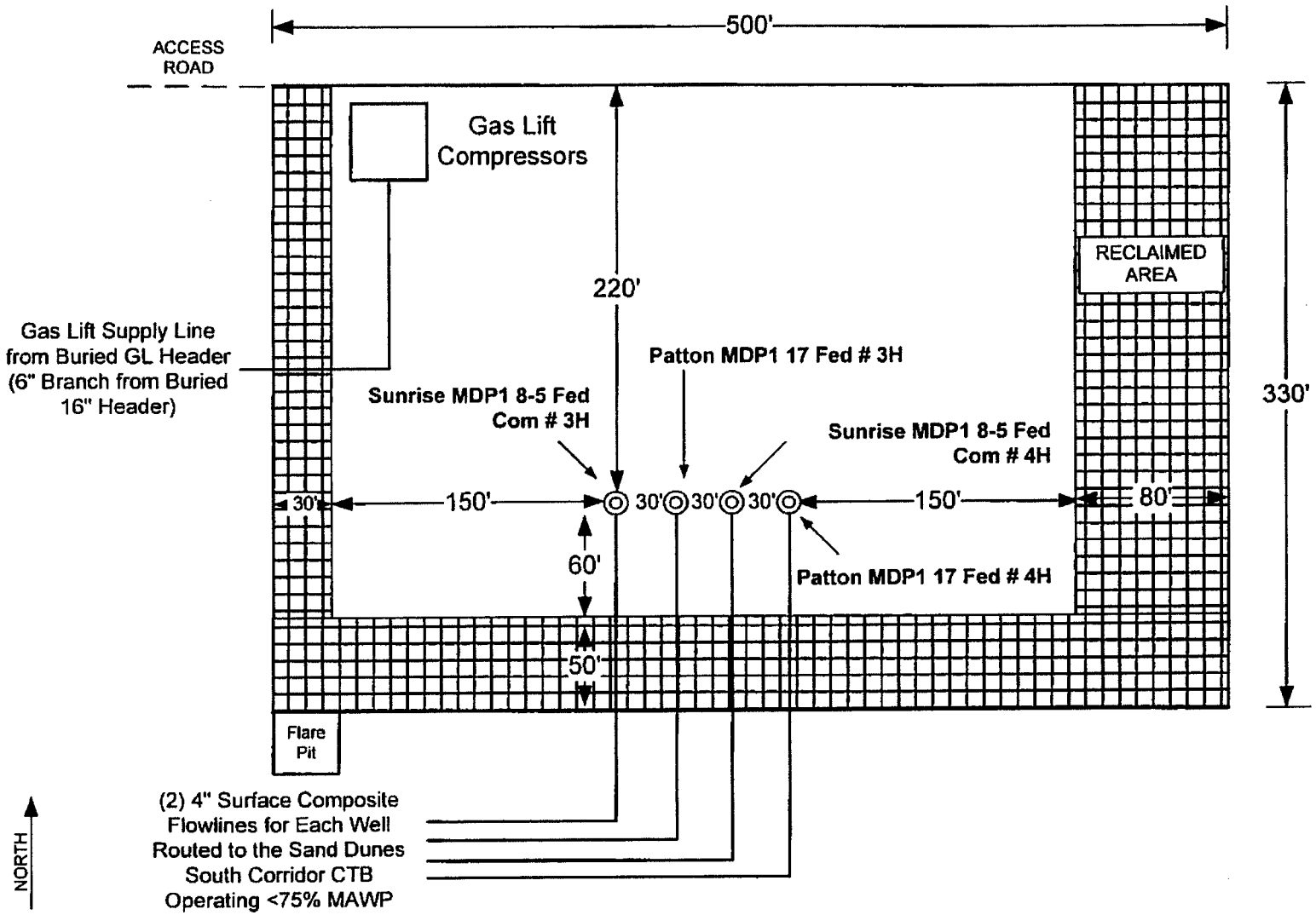

REVISION BLOCK						ENGINEERING RECORD	
NO.	DATE	DESCRIPTION	BY	CHK	APP	BY	DATE

FACILITY LAYOUT DIAGRAM

Patton MDP1 17 Fed # 3H & 4H
Sunrise MDP1 8-5 Fed Com # 3H & 4H
EDDY COUNTY, NEW MEXICO

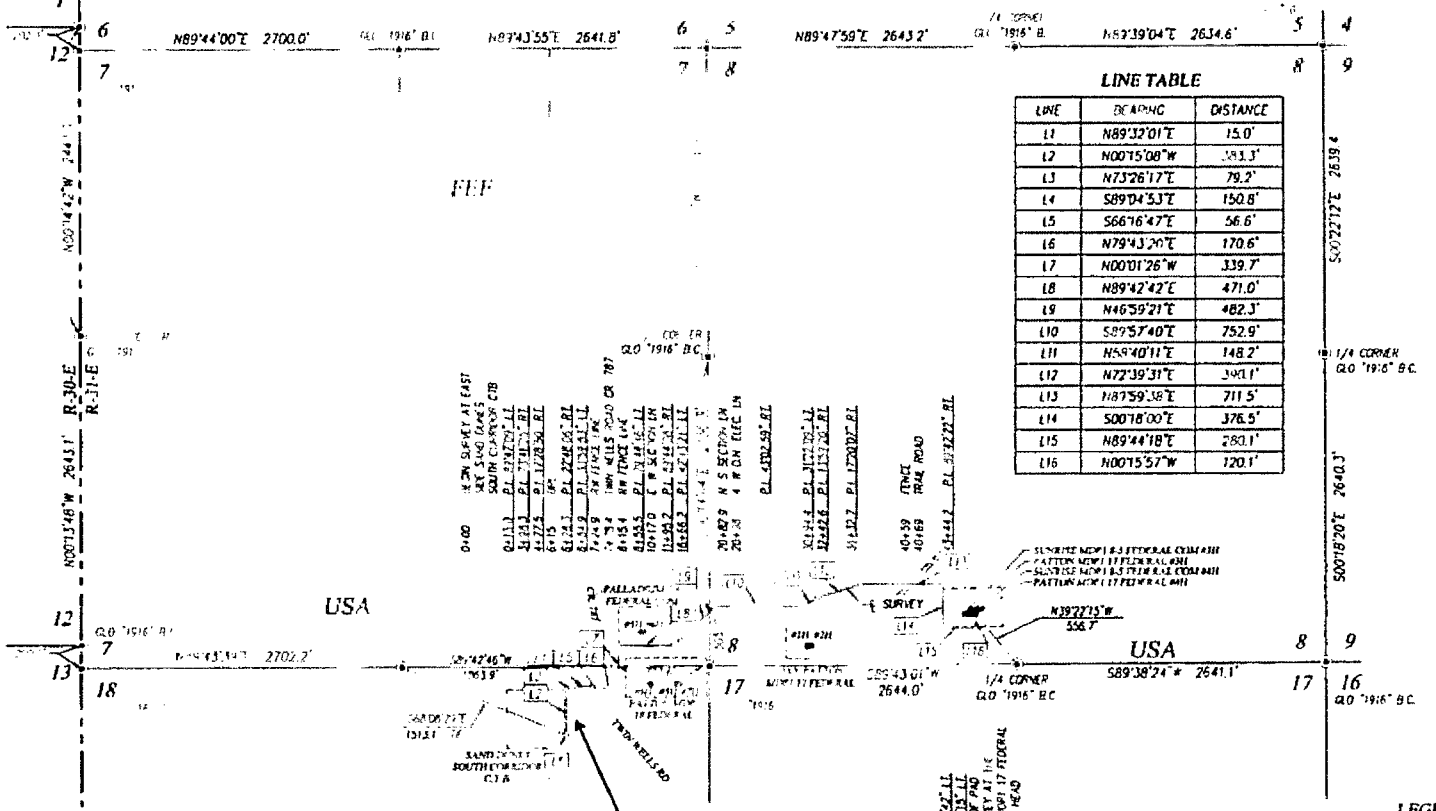

LINE TABLE

LINE	BEARING	DISTANCE
L1	N89°32'01"E	15.0'
L2	N00°15'08"W	383.3'
L3	N73°26'17"E	79.2'
L4	S89°04'53"E	150.8'
L5	S66°16'47"E	56.6'
L6	N79°43'20"E	170.6'
L7	N00°01'26"W	339.7'
L8	N89°42'42"E	471.0'
L9	N46°59'21"E	482.3'
L10	S89°57'40"E	752.9'
L11	N59°40'11"E	148.2'
L12	N72°39'31"E	390.1'
L13	N87°59'38"E	711.5'
L14	S00°18'00"E	376.5'
L15	N89°44'18"E	280.1'
L16	N00°15'57"W	120.1'

DESCRIPTION

SURVEY FOR A STRIP OF LAND 30.0 FEET WIDE AND 4927.9 FEET OR 0.933 MILES IN LENGTH CROSSING USA LAND IN SECTION 7, 8 & 18, TOWNSHIP 24 SOUTH, RANGE 31 EAST, N.M.P.M., EDDY COUNTY, NEW MEXICO, AND BEING 15.0 FEET LEFT AND 15.0 FEET RIGHT OF THE ABOVE PLATTED CENTERLINE SURVEY.

LEGEND

DENOTES FOUND CORNER AS NOTED

1000 0 1000 2000 Feet

Scale: 1" = 1000'

NOTE

BEARINGS SHOWN HEREON ARE MERCATOR GRID AND CONFORM TO THE NEW MEXICO COORDINATE SYSTEM "NEW MEXICO EAST ZONE" NORTH AMERICAN DATUM 1983. DISTANCES ARE SURFACE VALUES.

I, RONALD J. EIDSON, NEW MEXICO PROFESSIONAL SURVEYOR No. 3239, DO HEREBY CERTIFY THAT THIS SURVEY PLAT AND THE ACTUAL SURVEY ON THE GROUND UPON WHICH IT IS BASED WERE PERFORMED BY ME OR UNDER MY DIRECT SUPERVISION; THAT I AM RESPONSIBLE FOR THIS SURVEY; THAT THIS SURVEY MEETS THE MINIMUM STANDARDS FOR SURVEYING IN NEW MEXICO; AND THAT IT IS TRUE AND CORRECT TO THE BEST OF MY KNOWLEDGE AND BELIEF.

RONALD J. EIDSON DATE: 11/07/2016

PROVIDING SURVEYING SERVICES SINCE 1946

JOHN WEST SURVEYING COMPANY

412 N. DAL PASO HOBBS, N.M. 88240

(575) 393-3117 www.jwsc.biz

TBPLS # 10021000

OXY U.S.A. INC.

SURVEY FOR A SURFACE FLOW LINE FROM THE SAND DUNES SOUTH CORRIDOR CTB TO THE PATTON MDP1 17 FEDERAL #4H CROSSING SECTIONS 7, 8 & 18, TOWNSHIP 24 SOUTH, RANGE 31 EAST, N.M.P.M., EDDY COUNTY, NEW MEXICO

Survey Date: 10/31/16	CAD Date: 11/07/16	Drawn By: ACK
W.O. No.: 16110804	Rev	Rel. W.O. 16110476	Sheet 1 of 1

© Angelico USA INC.

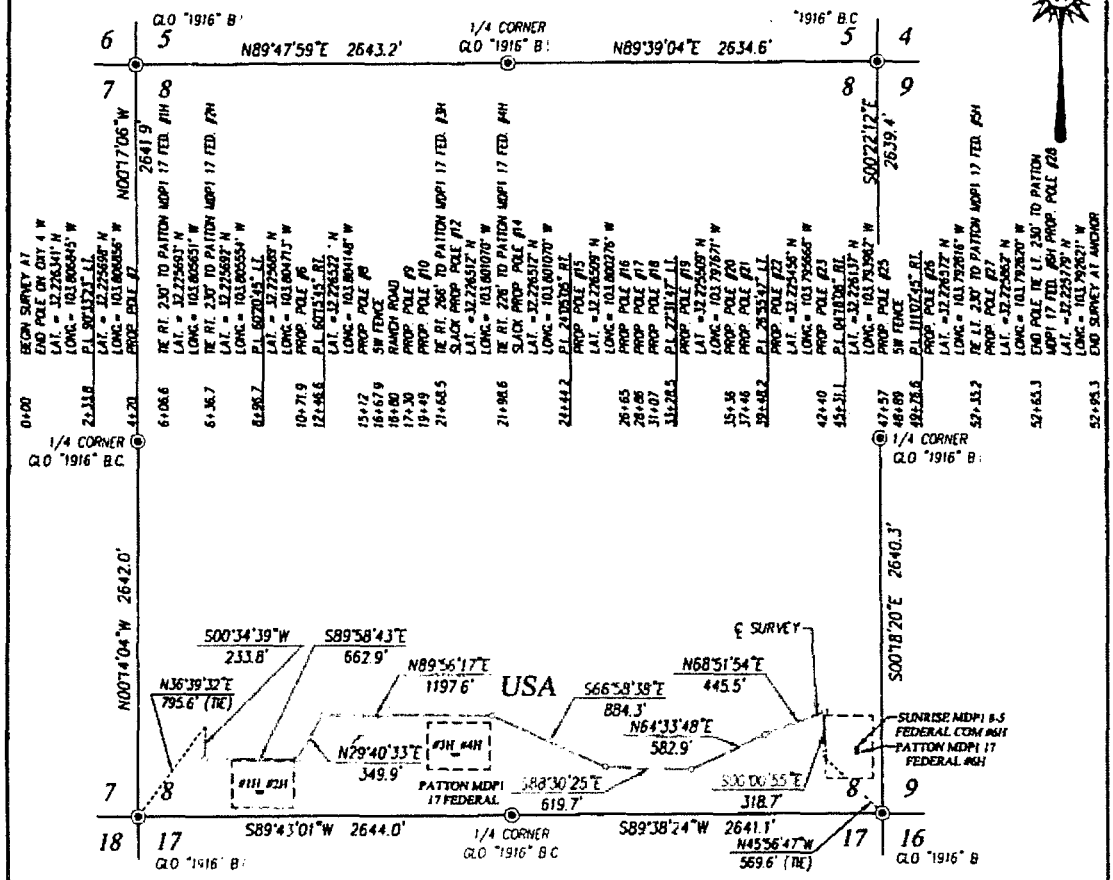

DESCRIPTION

SURVEY FOR A STRIP OF LAND 30.0 FEET WIDE AND 5295.3 FEET OR 1.00.3 MILES IN LENGTH CROSSING USA LAND IN SECTION 8, TOWNSHIP 24 SOUTH, RANGE 31 EAST, N.M.P.M., EDDY COUNTY, NEW MEXICO, AND BEING 15.0 FEET LEFT AND 15.0 FEET RIGHT OF THE ABOVE PLATTED CENTERLINE SURVEY

NOTE

1) BEARINGS SHOWN HEREON ARE MERCATOR GRID AND CONFORM TO THE NEW MEXICO COORDINATE SYSTEM "NEW MEXICO EAST ZONE" NORTH AMERICAN DATUM 1983. DISTANCES ARE SURFACE VALUES.

2) LATITUDE AND LONGITUDE VALUES SHOWN HEREON ARE RELATIVE TO THE NORTH AMERICAN DATUM 1983 (NAD83).

I, RONALD J. EIDSON, NEW MEXICO PROFESSIONAL SURVEYOR No. 3239, DO HEREBY CERTIFY THAT THIS SURVEY PLAT AND THE ACTUAL SURVEY ON THE GROUND UPON WHICH IT IS BASED WERE PERFORMED BY ME OR UNDER MY DIRECT SUPERVISION; THAT I AM RESPONSIBLE FOR THIS SURVEY; THAT THIS SURVEY MEETS THE MINIMUM STANDARDS FOR SURVEYING IN NEW MEXICO, AND THAT IT IS TRUE AND CORRECT TO THE BEST OF MY KNOWLEDGE AND BELIEF.

RONALD J. EIDSON

DATE 01/23/2017

PROVIDING SURVEYING SERVICES SINCE 1946
JOHN WEST SURVEYING COMPANY
412 N. DAL PASO HOBBS, N.M. 88240
(575) 393 3117 www.jwsc.biz
TBPLS# 10021000

LEGEND

◉ DENOTES FOUND CORNER AS NOTED

1000 0 1000 2000 FEET
Scale: 1" = 1000'

OXY U.S.A. INC.

SURVEY FOR AN ELECTRIC LINE TO THE PATTON MDP1 17 FEDERAL #1H TRU #6H CROSSING SECTION 8, TOWNSHIP 24 SOUTH, RANGE 31 EAST, N.M.P.M. EDDY COUNTY, NEW MEXICO

Survey Date: 4/6-7/16	CAD Date: 4/26/16		Drawn By: LSL/ACK
W.O. No. 16110244	Rev: 1/23/17	Rel. W.O.:	Sheet 1 of 1

© DRAFTING [illegible]\2016\Oxy U.S.A. [illegible] ELECTRIC LINE\16110244 PROPOSED ELEC. LINE TO THE PATTON [illegible] MDP1 17 [illegible] (5H & 6H)

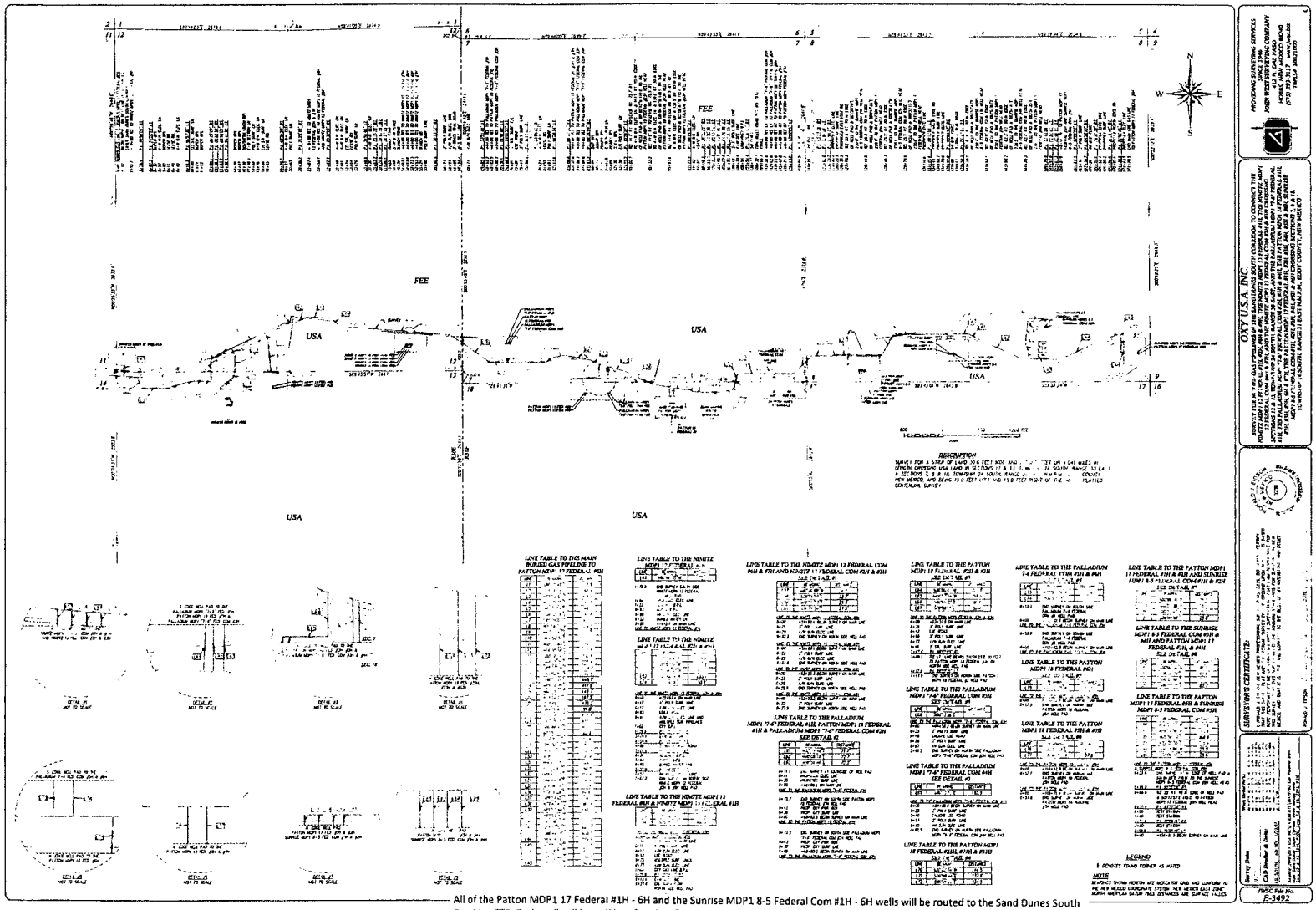

All of the Patton MDP1 17 Federal #1H - 6H and the Sunrise MDP1 8-5 Federal Com #1H - 6H wells will be routed to the Sand Dunes South Corridor CTB. Each well will have (2) surface laid flowlines operating at less than 75% of the MAWP of the flowline. The Sand Dunes South Corridor will be supported by centralized gas lift. The main gas lift compressors will be located on the pad of the Patton 18-3, directly adjacent to the Sand Dunes South Corridor CTB, and will be fed by a buried suction line from the Sand Dunes South Corridor CTB at low pressure. The discharge of the compressors at the Patton 18-3 will go into a common trunk line running the length of the South Corridor that will consist of (2) 12" high pressure gas lines. From the trunk line, there will be (1) 6" high pressure line running to each well. Additional gas lift compressors may be needed at the wellhead if higher injection pressures are required.

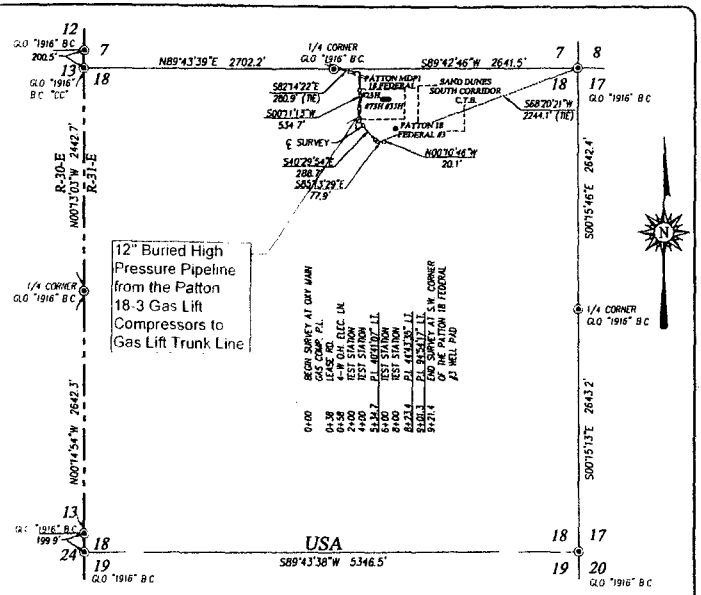

DESCRIPTION

SURVEY FOR A STRIP OF LAND 30.0 FEET WIDE AND 921.4 FEET OR 0.175 MILES IN LENGTH CROSSING USA LAND IN SECTION 18, TOWNSHIP 24 SOUTH, RANGE 31 EAST, N.M.P.M., EDDY COUNTY, NEW MEXICO, AND BEING 15.0 FEET LEFT AND 15.0 FEET RIGHT OF THE ABOVE PLATTED CENTERLINE SURVEY.

NOTE

BEARINGS SHOWN HEREON ARE MERCATOR GRID AND CONFORM TO THE NEW MEXICO COORDINATE SYSTEM "NEW MEXICO EAST ZONE" NORTH AMERICAN DATUM 1983. DISTANCES ARE SURFACE VALUES.

I, RONALD J. EIDSON, NEW MEXICO PROFESSIONAL SURVEYOR NO. 3239, DO HEREBY CERTIFY THAT THIS SURVEY PLAT AND THE ACTUAL SURVEY ON THE GROUND UPON WHICH IT IS BASED, WERE PERFORMED BY ME OR UNDER MY DIRECT SUPERVISION; THAT I AM RESPONSIBLE FOR THIS SURVEY; THAT THIS SURVEY MEETS THE MINIMUM STANDARDS FOR SURVEYING IN NEW MEXICO; AND THAT IT IS TRUE AND CORRECT TO THE BEST OF MY KNOWLEDGE AND BELIEF.

RONALD J. EIDSON Ronald J. Eidson

DATE: 11/07/2016

LEGEND

◉ DENOTES FOUND CORNER AS NOTED

1000 0 1000 2000 FEET

Scale: 1"=1000'

OXY U.S.A. INC.

SURVEY FOR A GAS PIPELINE FROM THE OXY MAIN GAS LINE TO THE PATTON 18 FEDERAL #3 CROSSING SECTION 18, TOWNSHIP 24 SOUTH, RANGE 31 EAST, N.M.P.M. EDDY COUNTY, NEW MEXICO

PROVIDING SURVEYING SERVICES SINCE 1946

JOHN WEST SURVEYING COMPANY

412 N. DAL PASO HOBBS, N.M. 88240

(575) 393-3117 www.jwsc.biz

TBPLS# 10021000

Survey Date: 10/5/16	CAD Date: 11/3/16	Drawn By: ACK
W.O. No.: 16110789	Rev.:	Rel. W.O.:	Sheet 1 of 1

©Anjelico\2016\OXY USA INC\EASEMENTS\16110789 Gas PL from Main Line Comp to Patton 18 Fed #3 in Sec 18, T24S, R31E

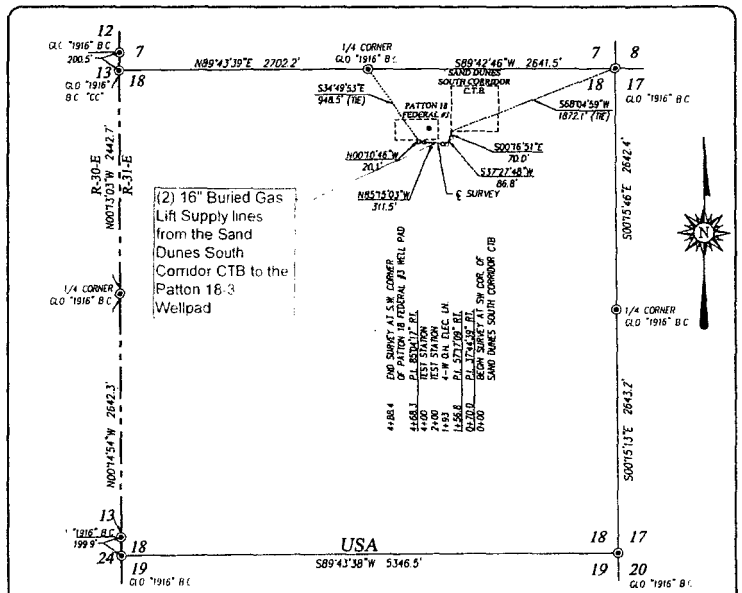

DESCRIPTION

SURVEY FOR A STRIP OF LAND 30.0 FEET WIDE AND 488.4 FEET OR 0.093 MILES IN LENGTH CROSSING USA LAND IN SECTION 18, TOWNSHIP 24 SOUTH, RANGE 31 EAST, N.M.P.M., EDDY COUNTY, NEW MEXICO, AND BEING 15.0 FEET LEFT AND 15.0 FEET RIGHT OF THE ABOVE PLATTED CENTERLINE SURVEY

NOTE

BEARINGS SHOWN HEREON ARE MERCATOR GRID AND CONFORM TO THE NEW MEXICO COORDINATE SYSTEM "NEW MEXICO EAST ZONE" NORTH AMERICAN DATUM 1983. DISTANCES ARE SURFACE VALUES.

I, RONALD J. EIDSON, NEW MEXICO PROFESSIONAL SURVEYOR NO. 3239, DO HEREBY CERTIFY THAT THIS SURVEY PLAT AND THE ACTUAL SURVEY ON THE GROUND UPON WHICH IT IS BASED WERE PERFORMED BY ME OR UNDER MY DIRECT SUPERVISION; THAT I AM RESPONSIBLE FOR THIS SURVEY; THAT THIS SURVEY MEETS THE MINIMUM STANDARDS FOR SURVEYING IN NEW MEXICO; AND THAT IT IS TRUE AND CORRECT TO THE BEST OF MY KNOWLEDGE AND BELIEF.

RONALD J. EIDSON Ronald J. Eidson

DATE: 11/07/2016

LEGEND

◉ DENOTES FOUND CORNER AS NOTED

1000 0 1000 2000 FEET

Scale: 1"=1000'

OXY U.S.A. INC.

SURVEY FOR A BURIED GAS PIPELINE TO THE PATTON 18 FEDERAL #3 CROSSING SECTION 18, TOWNSHIP 24 SOUTH, RANGE 31 EAST, N.M.P.M. EDDY COUNTY, NEW MEXICO

PROVIDING SURVEYING SERVICES SINCE 1946

JOHN WEST SURVEYING COMPANY

412 N. DAL PASO HOBBS, N.M. 88240

(575) 393-3117 www.jwsc.biz

TBPLS# 10021000

Survey Date: 10/5/16	CAD Date: 11/2/16	Drawn By: ACK
W.O. No.: 16110776	Rev.:	Rel. W.O.:	Sheet 1 of 1

©Anjelico\2016\OXY USA INC\EASEMENTS\16110776 Gas Pipeline to the Patton 18 Federal #3 in Sec 18, T24S, R31E

Prepared by:
Dave Andersen
GRR Land Department

GRR, INC. WATER SOURCES
FOR OXY CERTAIN POND LOCATIONS

08/26/2016

Pond Name	Water Source1	Water Source2	Water Source3	Water Source4
Cedar Canyon	Mine_Industrial	C-3478	C-2772	C-1360
Corral Fly	C-1360	C-1361	C-3358	C-3836
Cypress	Mine_Industrial	C-3478	C-2772	C-1361
Mesa Verde	C-2571	C-2574	J-27	J-5
Peaches	C-906	C-3200	SP-55 & SP-1279 A	C-100

GRR Inc.

NMOSE WELL NUMBER	WELL COMMON NAME	LAND OWNERSHIP	GPS LOCATION
C-100	Tres Rios - Next to well shack	PRIVATE	32.201921° -104.254317°
C-100-A	Tres Rios - Center of turnaround	PRIVATE	32.201856° -104.254443°
C-272-B	Tres Rios - Northwest	PRIVATE	32.202315° -104.254812°
C-906	Whites City Commercial	PRIVATE	32.176949°-104.374371°
C-1246-AC & C-1246-AC-S	Lackey	PRIVATE	32.266978°-104.271212°
C-1886	1886 Tank	BLM	32.229316° -104.312930°
C-1083	Petska	PRIVATE	32.30904° -104.16979°
C-1142	Winston West	BLM	32.507845-104.177410
C-1360	ENG#1	PRIVATE	32.064922° -103.908818°
C-1361	ENG#2	PRIVATE	32.064908° -103.906266°
C-1573	Cooksey	PRIVATE	32.113463° -104.108092°
C-1575	ROCKHOUSE Ranch Well - Wildcat	BLM	32.493190° -104.444163°
C-2270	CW#1 (Oliver Kiehne)	PRIVATE	32.021440° -103.559208°
C-2242	Walterscheid	PRIVATE	32.39199° -104.17694°
C-2492POD2	Stacy Mills	PRIVATE	32.324203° -103.812472°
C-2569	Paduca well #2	BLM	32.160588 -103.742051
C-2569POD2	Paduca well replacement	BLM	32.160588 -103.742051
C-2570	Paduca (tank) well #4	BLM	32.15668 -103.74114
C-2571	Paduca (road) well	BLM	32.163993° -103.745457°
C-2572	Paduca well #6	BLM	32.163985 -103.7412
C-2573	Paduca (in the bush) well	BLM	32.16229 -103.74363
C-2574	Paduca well (on grid power)	BLM	32.165777° -103.747590°
C-2701	401 Water Station	BLM	32.458767° -104.528097°
C-2772	Mobley Alternate	BLM	32.305220° -103.852360°
C-3011	ROCKY ARROYO - MIDDLE	BLM	32.409046° -104.452045°
C-3060	Max Vasquez	PRIVATE	32.31291° -104.17033°
C-3095	ROCKHOUSE Ranch Well - North of Rockcrusher	PRIVATE	32.486794° -104.426227°
C-3200	Beard East	PRIVATE	32.168720 -104.276600
C-3260	Hayhurst	PRIVATE	32.227110° -104.150925°
C-3350	Winston Barn	PRIVATE	32.511871° -104.139094°
C-3358	Branson	PRIVATE	32.19214° -104.06201°
C-3363	Watts#2	PRIVATE	32.444637° -103.931313°
C-3453	ROCKY ARROYO - FIELD	PRIVATE	32.458657° -104.460804°
C-3478	Mobley Private	PRIVATE	32.294937° -103.888656°
C-3483pod1	ENG#3	BLM	32.065556° -103.894722°
C-3483pod3	ENG#5	BLM	32.06614° -103.89231°
C-3483POD4	CW#4 (Oliver Kiehne)	PRIVATE	32.021803° -103.559030°
C-3483POD5	CW#5 (Oliver Kiehne)	PRIVATE	32.021692° -103.560158°
C-3554	Jesse Baker #1 well	PRIVATE	32.071937° -103.723030°
C-3577	CW#3 (Oliver Kiehne)	PRIVATE	32.021773° -103.559738°
C-3581	ENG#4	BLM	32.066083° -103.895024°
C-3595	Oliver Kiehne house well #2	PRIVATE	32.025484° -103.682529°
C-3596	CW#2 (Oliver Kiehne)	PRIVATE	32.021793° -103.559018°

GRR Inc.

NMOSE WELL NUMBER	WELL COMMON NAME	LAND OWNERSHIP	GPS LOCATION
C-3614	Dale Hood #2 well	PRIVATE	32.449290° -104.214500°
C-3639	Jesse Baker #2 well	PRIVATE	32.073692° -103.727121°
C-3679	McCloy-Batty	PRIVATE	32.215790° -103.537690°
C-3689	Winston Barn_South	PRIVATE	32.511504° -104.139073°
C-3731	Ballard Construction	PRIVATE	32.458551° -104.144219°
C-3764	Watts#4	PRIVATE	32.443360° -103.942890°
C-3795	Beckham#6	BLM	32.023434°-103.321968°
C-3821	Three River Trucking	PRIVATE	32.34636° -104.21355
C-3824	Collins	PRIVATE	32.224053° -104.090129°
C-3829	Jesse Baker #3 well	PRIVATE	32.072545°-103.722258°
C-3830	Paduca	BLM	32.156400° -103.742060°
C-3836	Granger	PRIVATE	32.10073° -104.10284°
C-384	ROCKHOUSE Ranch Well - Rockcrusher	PRIVATE	32.481275° -104.420706°
C-459	Walker	PRIVATE	32.3379° -104.1498°
C-496pod2	Munoz #3 Trash Pit Well	PRIVATE	32.34224° -104.15365°
C-496pod3&4	Munoz #2 Corner of Porter & Derrick	PRIVATE	32.34182° -104.15272°
C-552	Dale Hood #1 well	PRIVATE	32.448720° -104.214330°
C-764	Mike Vasquez	PRIVATE	32.230553° -104.083518°
C-766(old)	Grandi	PRIVATE	32.32352° -104.16941°
C-93-S	Don Kidd well	PRIVATE	32.344876 -104.151793
C-987	ROCKY ARROYO - HOUSE	PRIVATE	32.457049° -104.461506°
C-98-A	Bindel well	PRIVATE	32.335125° -104.187255°
CP-1170POD1	Beckham#1	PRIVATE	32.065889° -103.312583°
CP-1201	Winston Ballard	BLM	32.580380° -104.115980°
CP-1202	Winston Ballard	BLM	32.538178° -104.046024°
CP-1231	Winston Ballard	PRIVATE	32.618968° -104.122690°
CP-1263POD5	Beckham#5	PRIVATE	32.065670° -103.307530°
CP-1414	Crawford #1	PRIVATE	32.238380° -103.260890°
CP-1414 POD 1	RRR	PRIVATE	32.23911° -103.25988°
CP-1414 POD 2	RRR	PRIVATE	32.23914° -103.25981°
CP-519	Bond_Private	PRIVATE	32.485546 -104.117583
CP-556	Jimmy Mills (Stacy)	STATE	32.317170° -103.495080°
CP-626	Ol Loco (W)	STATE	32.692660° -104.068064°
CP-626-S	Beach Exploration/ Ol Loco (E)	STATE	32.694229° -104.064759°
CP-73	Laguna #1	BLM	32.615015°-103.747615°
CP-74	Laguna #2	BLM	32.615255°-103.747688°
CP-741	Jimmy Richardson	BLM	32.61913° -104.06101°
CP-742	Jimmy Richardson	BLM	32.614061° -104.017211°
CP-742	Hidden Well	BLM	32.614061 -104.017211
CP-745	Leaning Tower of Pisa	BLM	32.584619° -104.037179°
CP-75	Laguna #3	BLM	32.615499°-103.747715°
CP-924	Winston Ballard	BLM	32.545888° -104.110114°
CP-926	Winchester well (Winston)	BLM	32.601125° -104.128358°

GRR Inc.

NMOSE WELL NUMBER	WELL COMMON NAME	LAND OWNERSHIP	GPS LOCATION
J-27	Beckham	PRIVATE	32.020403° -103.299333°
J-5	EPNG Jal Well	PRIVATE	32.050232° -103.313117°
J-33	Beckham	PRIVATE	32.016443° -103.297714°
J-34	Beckham	PRIVATE	32.016443° -103.297714°
J-35	Beckham	PRIVATE	32.016443° -103.297714°
L-10167	Angell Ranch well	PRIVATE	32.785847° -103.644705°
L-10613	Northcutt3 (2nd House well)	PRIVATE	32.687922°-103.472452°
L-11281	Northcutt4	PRIVATE	32.687675°-103.471512°
L-12459	Northcutt1 (House well)	PRIVATE	32.689498°-103.472697°
L-12462	Northcutt8 Private Well	PRIVATE	32.686238°-103.435409°
L-13049	EPNG Maljamar well	PRIVATE	32.81274° -103.67730°
L-13129	Pearce State	STATE	32.726305°-103.553172°
L-13179	Pearce Trust	STATE	32.731304°-103.548461°
L-13384	Northcutt7 (State) CAZA	STATE	32.694651°-103.434997°
L-1880S-2	HB Intrepid well #7	PRIVATE	32.842212° -103.621299°
L-1880S-3	HB Intrepid well #8	PRIVATE	32.852415° -103.620405°
L-1881	HB Intrepid well #1	PRIVATE	32.829124° -103.624139°
L-1883	HB Intrepid well #4	PRIVATE	32.828041° -103.607654°
L-3887	Northcutt2 (Tower or Pond well)	PRIVATE	32.689036°-103.472437°
L-5434	Northcutt5 (State)	STATE	32.694074°-103.405111°
L-5434-S	Northcutt6 (State)	STATE	32.693355°-103.407004°
RA-14	Horner Can	PRIVATE	32.89348° -104.37208°
RA-1474	Irvin Smith	PRIVATE	32.705773° -104.393043°
RA-1474-B	NLake WS / Jack Clayton	PRIVATE	32.561221°-104.293095°
RA-9193	Angell Ranch North Hummingbird	PRIVATE	32.885162° -103.676376°
SP-55 & SP-1279-A	Blue Springs Surface POD	PRIVATE	32.181358° -104.294009°
SP-55 & SP-1279 (Bounds)	Bounds Surface POD	PRIVATE	32.203875° -104.247076°
SP-55 & SP-1279 (Wilson)	Wilson Surface POD	PRIVATE	32.243010° -104.052197°
City Treated Effluent	City of Carlsbad Waste Treatment Plant	PRIVATE	32.411122° -104.177030°
Mine Industrial	Mosaic Industrial Water	PRIVATE	32.370286° -103.947839°
Mobley State Well (NO OSE)	Mobley Ranch	STATE	32.308859° -103.891806°
EPNG Industrial	Monument Water Well Pipeline (Oil Center, Eunice)	PRIVATE	32.512943° -103.290300°
MCOX Commercial	Matt Cox Commercial	PRIVATE	32.529431° -104.188017°
AMAX Mine Industrial	Mosaic Industrial Water	N/A	VARIOUS TAPS
WAG Mine Industrial	Mosaic Industrial Water	N/A	VARIOUS TAPS
HB Mine Industrial	Intrepid Industrial Water	N/A	VARIOUS TAPS

Mesquite

Cedar Canyon

Major Source: C464 (McDonald) Sec. 13 T24S R28E
Secondary Source: C-00738 (McDonald/Faulk) Sec. 12 T24S R28E

Corral Fly – South of Cedar Canyon

Major Source: C464 (McDonald) Sec. 13 T24S R28E
Secondary Source: C-00738 (McDonald/Faulk) Sec. 12 T24S R28E

Cypress – North of Cedar Canyon

Major Source: Caviness B: C-501-AS2 Sec 23 T28S R15E
Secondary Source: George Arnis; C-1303

Sand Dunes – new frac pond

Major Source: 128 Fresh Water Pond (Mesquite/Mosaic) – located at MM 4 on 128; 240,000 bbl pond
Secondary Source: George Arnis; C-1303

Mesa Verde – east of Sand Dunes

Major Source: 128 Fresh Water Pond (Mesquite/Mosaic) – located at MM 4 on 128; 240,000 bbl pond
Secondary Source: Unknown at this time; needs coordinates to determine secondary source

Smokey Bits/Ivore/Misty – had posiden tanks before

Major Source: Unknown at this time; need coordinates to determine major source
Secondary Source: Unknown at this time; needs coordinates to determine secondary source

Red Tank/Lost Tank

Major Source: Unknown at this time; need coordinates to determine major source
Secondary Source: Unknown at this time; needs coordinates to determine secondary source

Peaches

Major Source: Unknown at this time; need coordinates to determine major source
Secondary Source: Unknown at this time; needs coordinates to determine secondary source

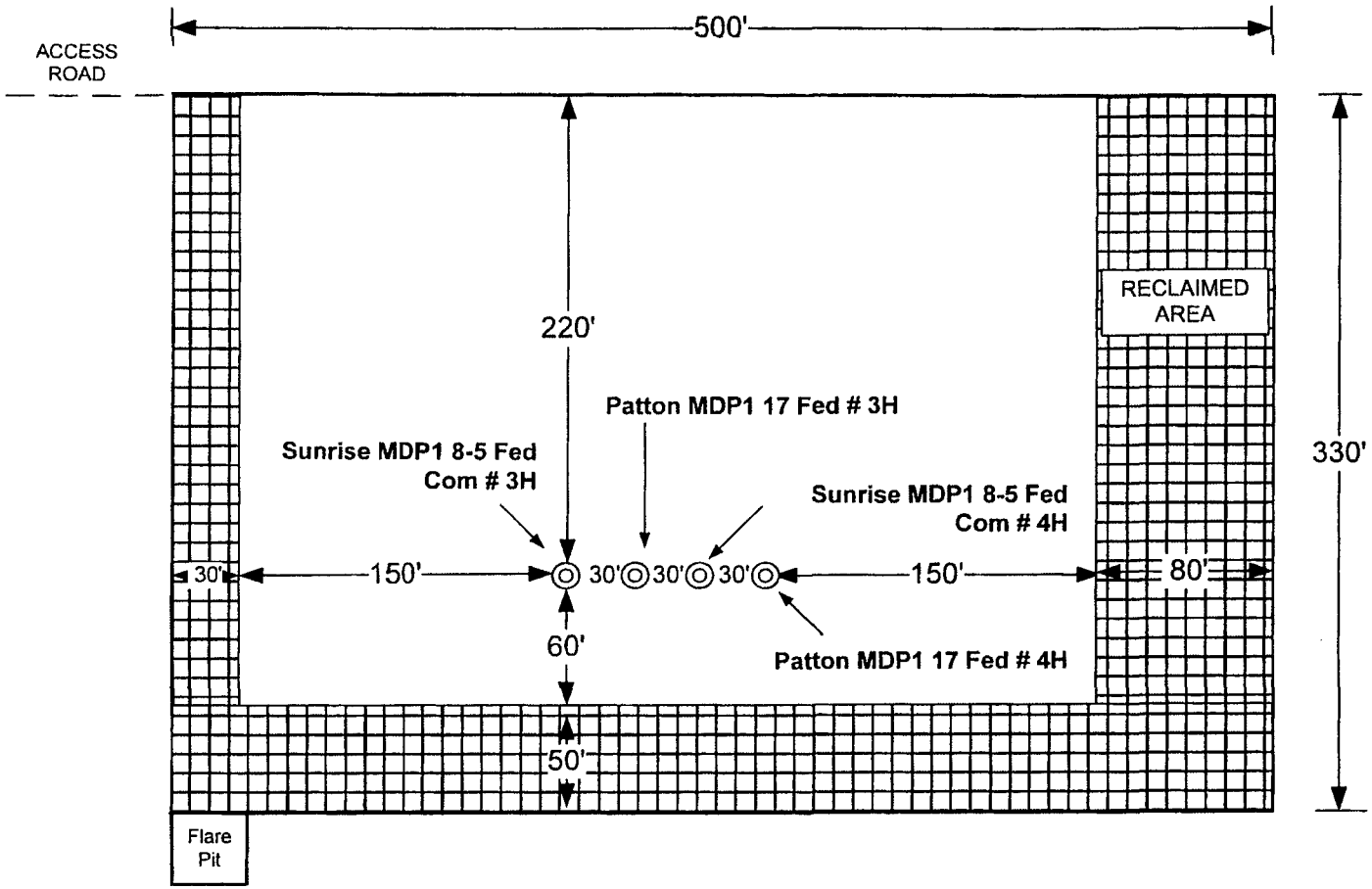

NORTH

VDOOR-WEST

8' Diameter x 8' Deep Tinhorn Cellar

REVISION BLOCK						ENGINEERING RECORD	
NO.	DATE	DESCRIPTION	BY	CHK	APP	BY	DATE

FLEX 3 RIG DIAGRAM

Patton MDP1 17 Fed # 3H & 4H

Sunrise MDP1 8-5 Fed Com # 3H & 4H

EDDY COUNTY, NEW MEXICO

OXY USA INC.
PATTON MDP1 "17" FEDERAL #4H
SITE PLAN

FAA PERMIT: NO

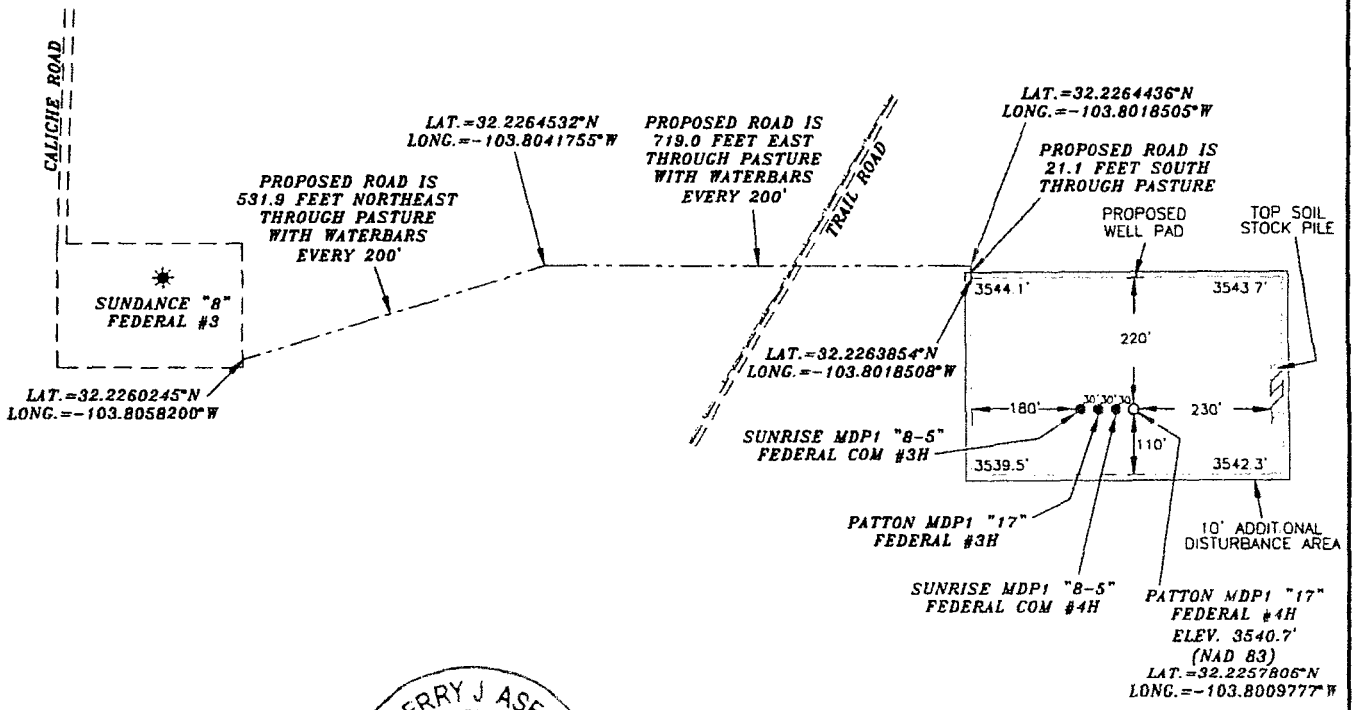

TERRY J ASEL
NEW MEXICO
15079
REGISTERED PROFESSIONAL LAND SURVEYOR

LEGEND

- DENOTES PROPOSED WELL PAD
- DENOTES PROPOSED ROAD
- DENOTES STOCK PILE AREA
- DENOTES EXISTING WELL

300' 0 300' 600' FEET

SCALE: 1"=300'

SURVEYORS CERTIFICATE

I, TERRY J. ASEL, NEW MEXICO PROFESSIONAL SURVEYOR NO. 15079, DO HEREBY CERTIFY THAT I CONDUCTED AND AM RESPONSIBLE FOR THIS SURVEY, THAT THIS SURVEY IS TRUE AND CORRECT TO THE BEST OF MY KNOWLEDGE AND BELIEF, AND MEETS THE "MINIMIUM STANDARDS FOR SURVEYING IN NEW MEXICO" AS ADOPTED BY THE NEW MEXICO STATE BOARD OF REGISTRATION FOR PROFESSIONAL ENGINEERS AND SURVEYORS.

Terry J. Asel 12/9/2016

Terry J. Asel, N.M. R.P.L.S. No. 15079

Asel Surveying

P.O BOX 393 - 310 W TAYLOR
HOBBS, NEW MEXICO - 575-393-9146

OXY USA INC.		
PATTON MDP1 "17" FEDERAL #4H LOCATED AT 432' FSL & 2292' FWL IN SECTION 8, TOWNSHIP 24 SOUTH, RANGE 31 EAST, N.M.P.M., EDDY COUNTY, NEW MEXICO		
Survey Date: 10/07/16	Sheet 1 of 1 Sheets	
W.O. Number: 161007WL-c	Drawn By: KA	Rev:
Date: 11/02/16	161007WL-c	Scale:1"=300'

Pad Site Overall Rig Layout
4 Well Pad Site

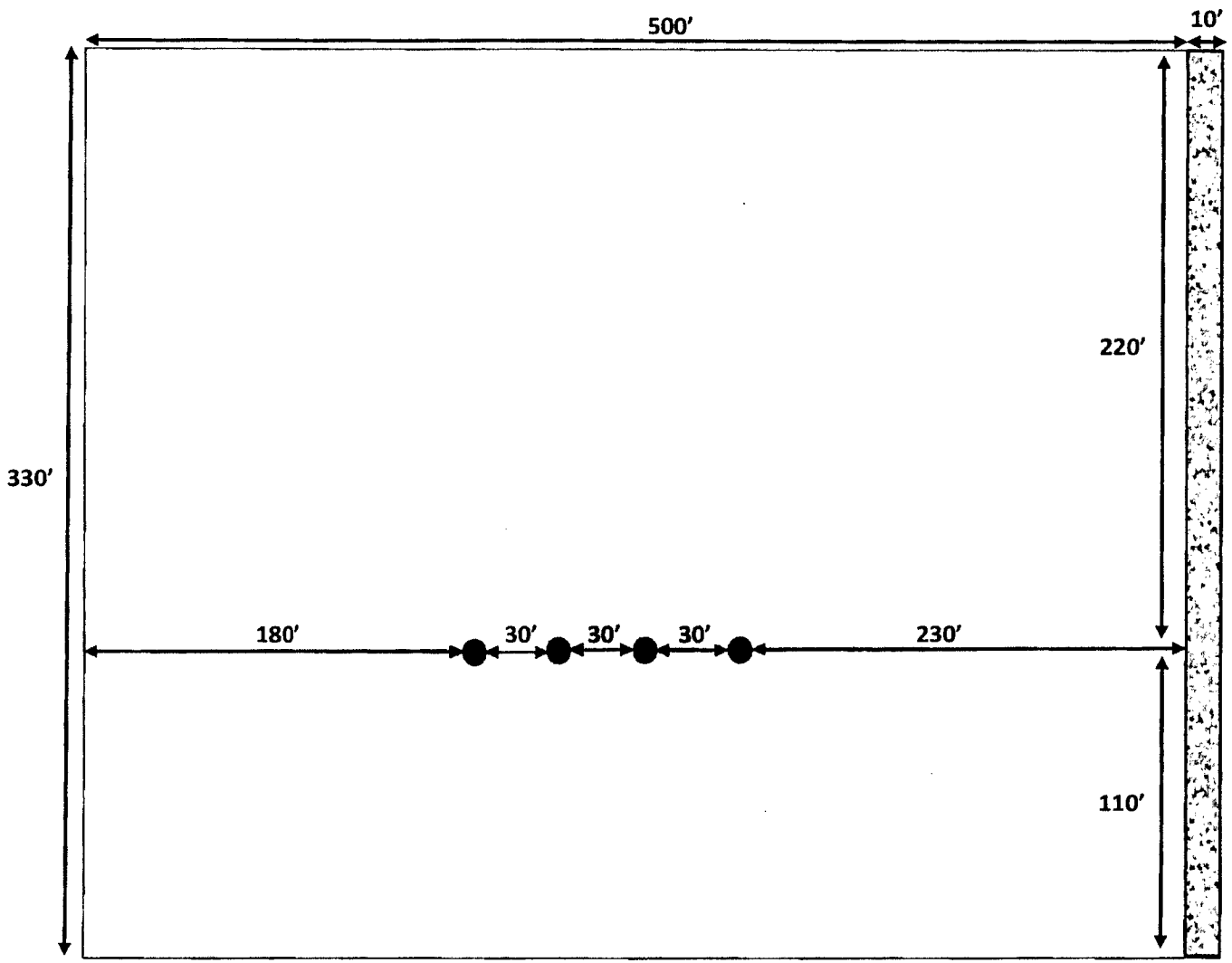

Oxy Single Centrifuge Closed Loop System – New Mexico Flex III

May 28, 2013

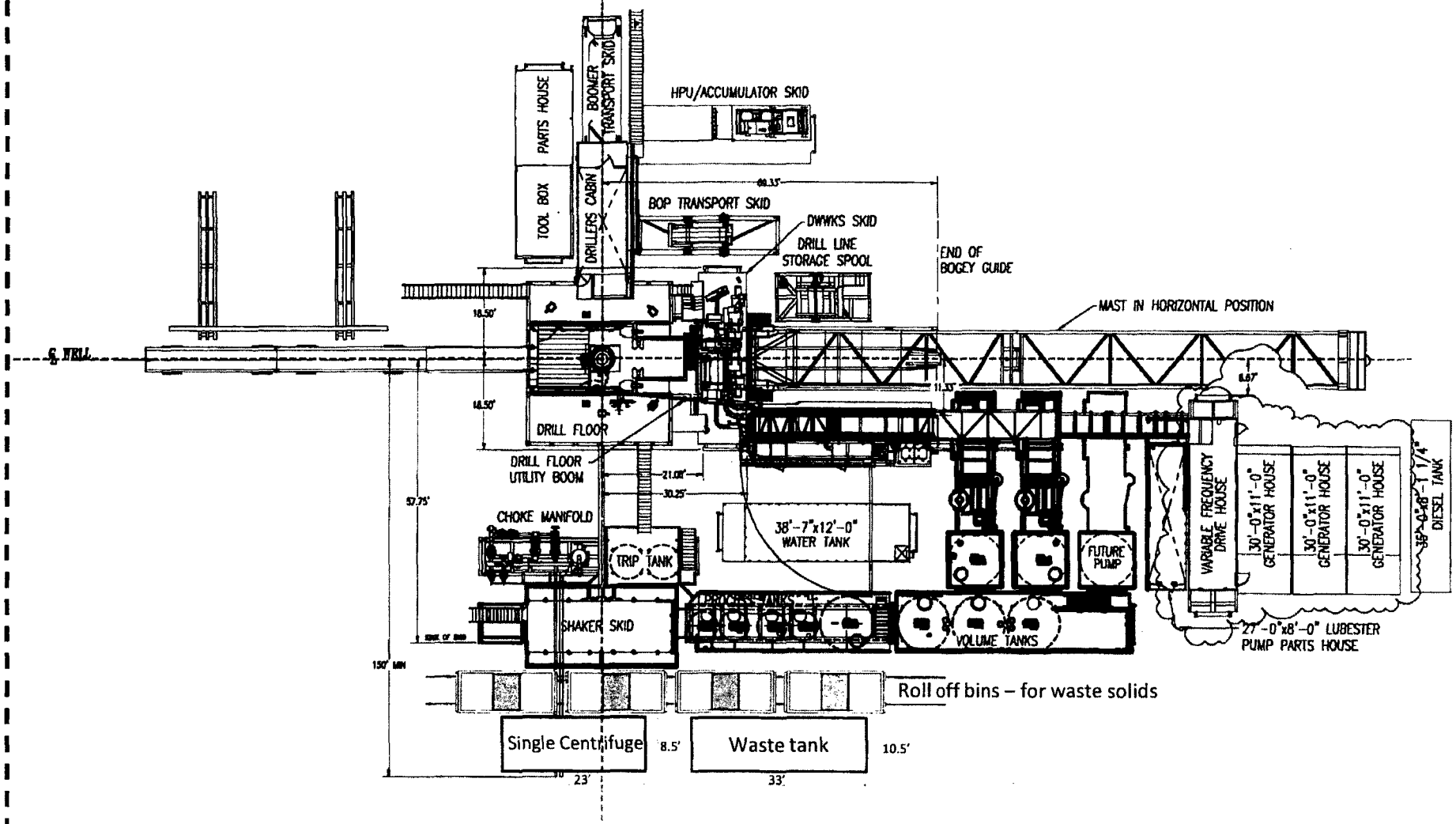

Oxy

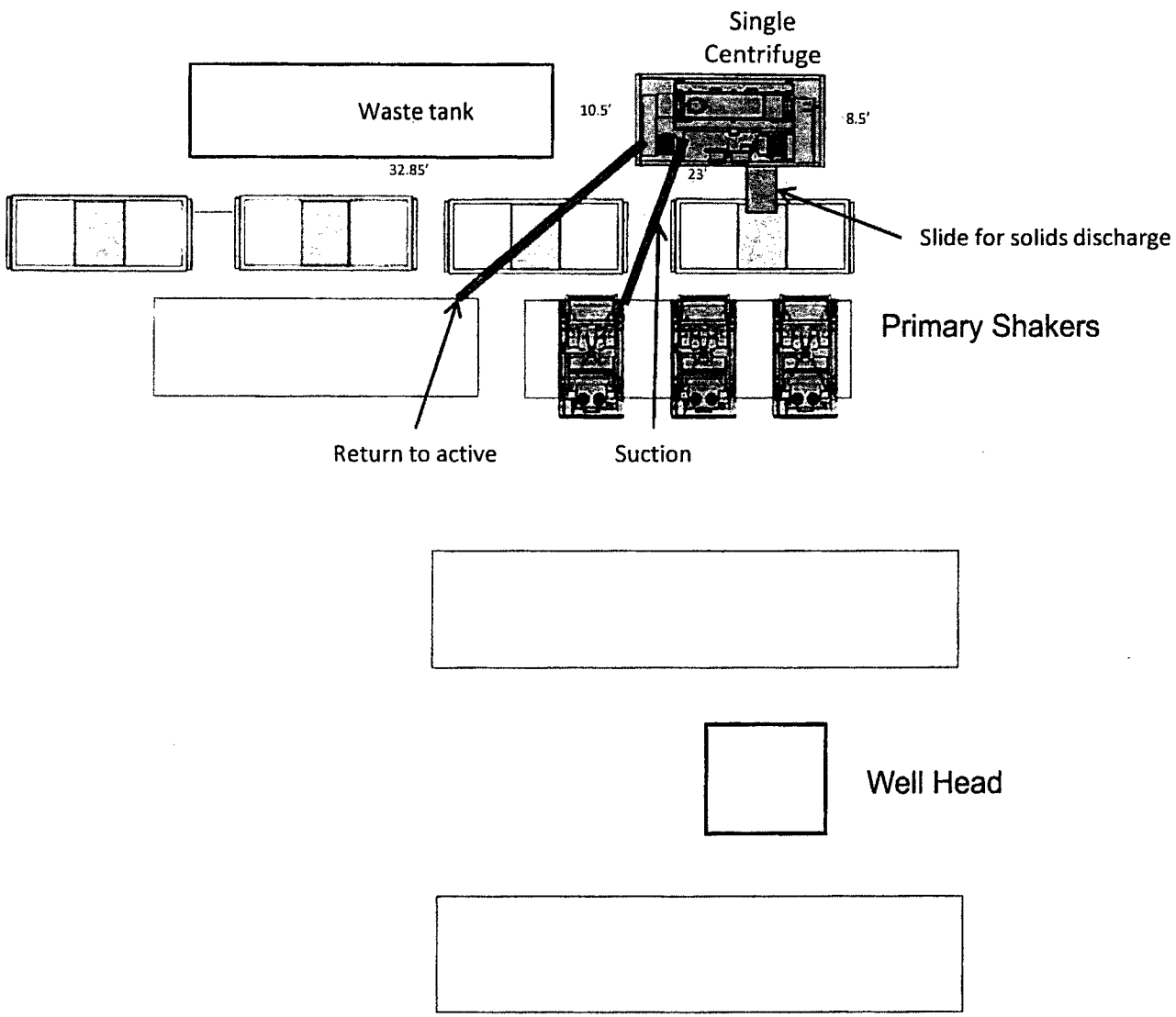

Oxy Single Centrifuge Closed Loop System – New Mexico Flex III

May 28, 2013

Cry U.S.A Inc.

New Mexico Staking Form

Date Staked: 9-29-16

Lease/Well Name: Pallon NDPL 17 Fed #4H

Legal Description: 432 FSL 2292' FWL Sec 8 T24S R31E

Latitude: 32° 13' 32.81" NAD 83

Longitude: -103° 48' 03.52'

Move Information: 30' EAST

County: Eddy

Surface Owner/Tenant: BLM

Nearest Residence: 3/4 mile

Nearest Water Well:

Pad Size: WEST

Road Description: Road from: NW Connection: WEST

New Road:

Upgrade Existing Road:

Interim Reclamation: 50' EAST 50' SOUTH

Source of Caliche:

Top Soil: EAST

Onsite Date Performed: 9-29-16

Onsite Attendees: Brooke Wilson - BLM Jim Wilson, Michelle Edwards, Michael Wilson - Oxy SWCA Asel Survey

Special Notes:

AERIAL MAP

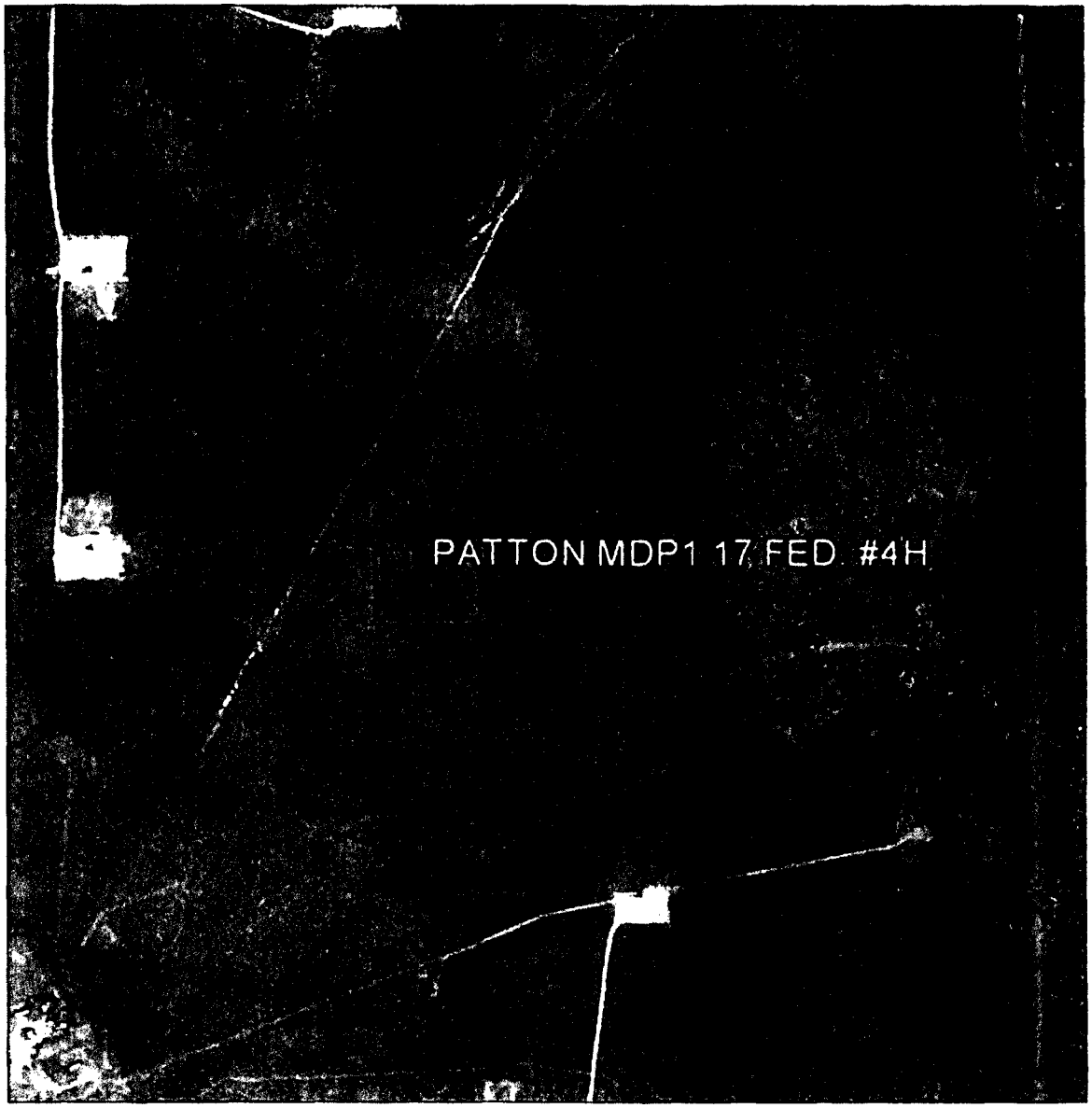

SCALE: NOT TO SCALE

SEC. 8 TWP. 24-S RGE. 31-E

SURVEY N.M.P.M.

COUNTY EDDY

DESCRIPTION 432' FSL & 2292' FWL

ELEVATION 3540.7'

OPERATOR OXY USA INC.

LEASE PATTON MDP1 "17" FEDERAL #4H

Asel Surveying

P.O BOX 393 – 310 W. TAYLOR
HOBBS, NEW MEXICO – 575-393-9146

LOCATION VERIFICATION MAP

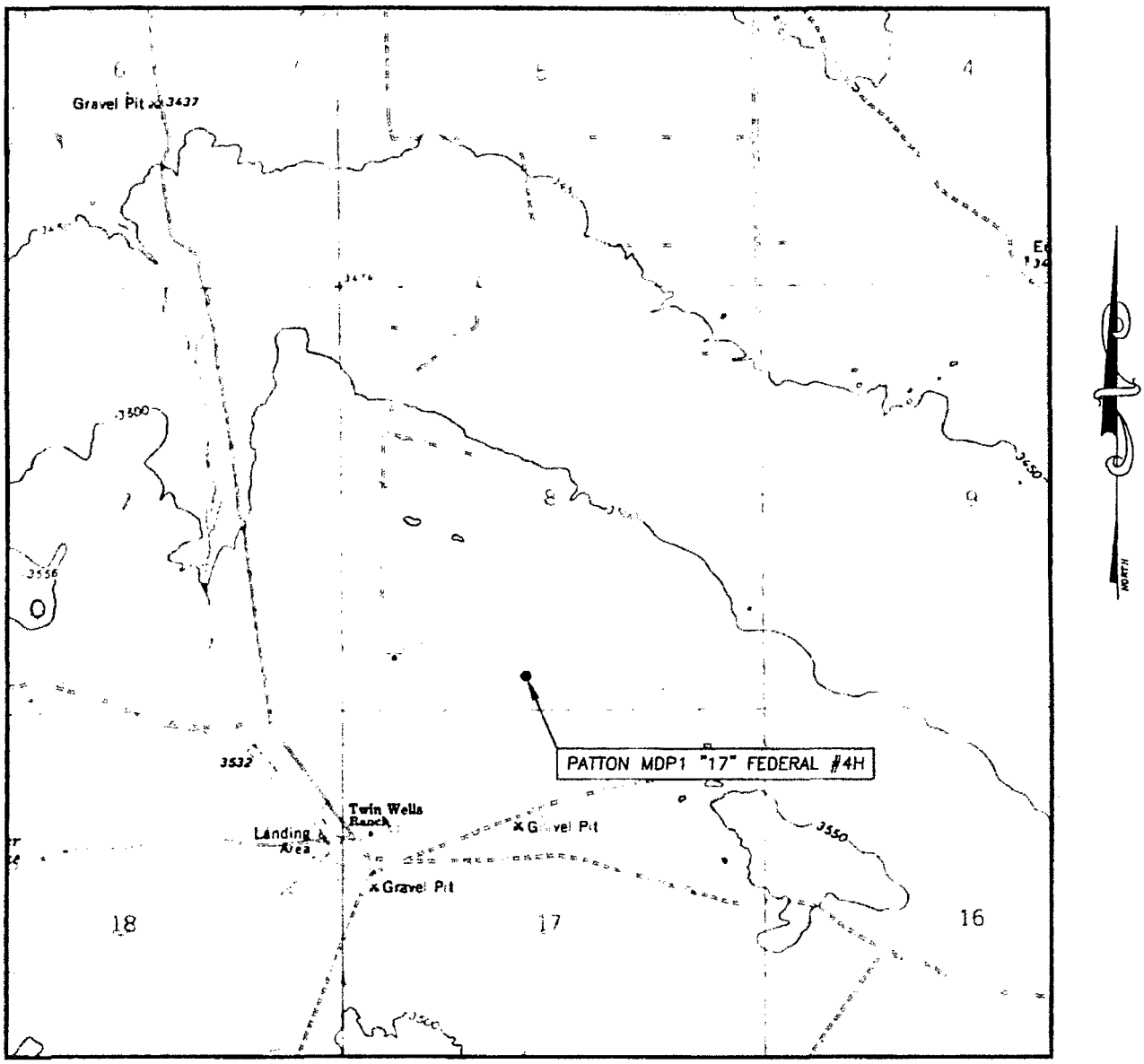

SCALE: 1" = 2000'

CONTOUR INTERVAL: 10'

SEC. 8 TWP. 24-S RGE. 31-E

SURVEY N.M.P.M.

COUNTY EDDY

DESCRIPTION 432' FSL & 2292' FWL

ELEVATION 3540.7'

OPERATOR OXY USA INC.

LEASE PATTON MDP1 "17" FEDERAL #4H

U.S.G.S. TOPOGRAPHIC MAP
BIG SINKS, N.M.

Asel Surveying

P O BOX 393 - 310 W. TAYLOR
HOBBS, NEW MEXICO - 575-393-9146

Surface Use Plan of Operations

Operator Name/Number:	**OXY USA Inc. – 16696**
Lease Name/Number:	**Patton MDP1 17 Federal #4H**
Pool Name/Number:	**Cotton Draw Bone Spring 13367**
Surface Location:	**432 FSL 2292 FWL SESW (N) Sec 8 T24S R31E – NMNM29234**
Bottom Hole Location:	**190 FSL 2211 FEL SWSE (O) Sec 17 T24S R31E – NMNM89172**

1. Existing Roads

a. A copy of the USGS "Big Sinks, NM" quadrangle map is attached showing the proposed location. The well location is spotted on the map, which shows the existing road system.

b. The well was staked by Terry J. Asel, Certificate No. 15079 on 10/7/16, certified 12/9/16.

c. Directions to Location: From the intersection of NM State Hwy 128 and CR 787 (Twin Wells Rd), go southeast on State Hwy. 128 for 1.1 miles. Turn right on caliche road and go south for 3.3 miles. Turn right and go west for 0.7 miles. Turn left and go south for 0.2 miles, go southwest for 0.4 miles. Go south for 0.6 miles. From the southeast corner of existing pad go northeast on proposed road for 531.9', turn right and go east for 719', turn right and go south for 21.1' to location.

2. New or Reconstructed Access Roads:

a. A new access road will be built. The access road will run 531.9' northeast, continue 719' east and then 21.1' south through pasture to the northwest corner of the pad.

b. The maximum width of the road will be 14'. It will be crowned and made up of 6" of rolled and compacted caliche. Water will be deflected, as necessary, to avoid accumulation and prevent surface erosion.

c. Surface material will be native caliche. This material will be obtained from a BLM approved pit nearest in proximity to the location. The average grade will be approximately 1%.

d. No cattle guards, grates or fence cuts will be required. Turnouts every 1000' as needed.

e. Blade, water and repair existing caliche roads as needed.

f. Water Bars will be incorporated every 200' during the construction of the road.

3. Location of Existing Wells:

Existing wells within a one mile radius of the proposed well are shown on attached plat.

4. Location of Existing and/or Proposed Facilities:

a. In the event the well is found productive, the Sand Dunes South Corridor CTB would be utilized and the necessary production equipment will be installed at the well site. See proposed facilities layout diagram.

b. All flow lines will adhere to API standards. They will consist of 2 – 4" composite flowlines operating < 75% MAWP, surface and 1 –6" steel gas lift supply line operating <1500 psig, buried, lines to follow surveyed route. Survey of a strip of land 30' wide and 4927.9' in length crossing USA Land in Sections 7, 8 & 18 T24S R31E, NMPM, Eddy County, NM and being 15' left and 15' right of the centerline survey, see attached.

c. Electric line will follow a route approved by the BLM. Survey of a strip of land 30' wide and 5295.3' in length crossing USA Land in Section 8 T24S R31E NMPM, Eddy County, NM and being 15' left and 15' right of the centerline survey, see attached.

d. All of the Patton MDP1 17 Fed #1H, 2H, 3H, 4H, 5H, 6H will be routed to the Sand Dunes South Corridor CTB. Each well will have (2) surface laid flowlines operating at less than 75% of the MAWP of the flowline. The Sand Dunes South Corridor will be supported by centralized gas lift. The main gas lift compressors will be located on the pad of the Patton 18-3, directly adjacent to the Sand Dunes South Corridor CTB, and will be fed by a buried suction line from the Sand Dunes South Corridor CTB at low pressure. The discharge of the compressors at the Patton 18-3 will go into a common trunk line running the length of the South Corridor that will consist of (2) 12" high pressure gas lines. From the trunk line, there will be (1) 6" high pressure line running to each well. Additional gas lift compressors may be needed at the wellhead if higher injection pressures are required. See Attached.

5. Location and types of Water Supply

This well will be drilled using a combination of water mud systems. It will be obtained from commercial water stations in the area and will be hauled to location by transport truck using existing and proposed roads.

6. Construction Materials:

Primary

All caliche utilized for the drilling pad and proposed access road will be obtained from an existing BLM/State/Fee approved pit or from prevailing deposits found on the location. Will use BLM recommended extra caliche from other locations close by for roads, if available.

Secondary

The secondary way of obtaining caliche to build locations and roads will be by "turning over" the location. This means, caliche will be obtained from the actual well site. A caliche permit will be obtained from BLM prior to pushing up any caliche. 2400 cubic yards is max amount of caliche needed for pad and roads. Amount will vary for each pad. The procedure below has been approved by BLM personnel:

a. The top 6" of topsoil is pushed off and stockpiled along the side of the location.
b. An approximate 120' X 120' area is used within the proposed well site to remove caliche.
c. Subsoil is removed and piled alongside the 120' X 120' within the pad site.
d. When caliche is found, material will be stockpiled within the pad site to build the location and road.
e. Then subsoil is pushed back in the hole and caliche is spread accordingly across entire location and road.
f. Once the well is drilled the stockpiled top soil will be used for interim reclamation and spread along areas where caliche is picked up and the location size is reduced. Neither caliche nor subsoil will be stockpiled outside of the well pad. Topsoil will be stockpiled along the edge of the pad as depicted in the attached plat.

7. Methods of Handling Waste Material:

a. A closed loop system will be utilized consisting of above ground steel tanks and haul-off bins. Disposal of liquids, drilling fluids and cuttings will be disposed of at an approved facility. Solids-CRI, Liquids-Laguna

b. All trash, junk and other waste material will be contained in trash cages or bins to prevent scattering. When the job is completed, all contents will be removed and disposed of in an approved sanitary landfill.

c. The supplier, including broken sacks, will pickup slats remaining after completion of well.

d. A Porto-john will be provided for the rig crews. This equipment will be properly maintained during the drilling and completion operations and will be removed when all operations are complete.

e. Disposal of fluids to be transported will be by the following companies. TFH Ltd, Laguna SWD Facility

8. Ancillary Facilities: None needed.

9. Well Site Layout:

The proposed well site layout with dimensions of the pad layout and equipment location.

V-Door – West CL Tanks – South Pad – 330' X 500' – 4 Well Pad

10. Plans for Surface Reclamation:

a. After concluding the drilling and/or completion operations, if the well is found non-commercial, the caliche will be removed from the pad and transported to the original caliche pit or used for other drilling locations. The road will be reclaimed as directed by the BLM. The original topsoil will again be returned to the pad and contoured, as close as possible, to the original topography, and the area will be seeded with an approved BLM mixture to re-establish vegetation.

b. If the well is deemed commercially productive, caliche from the areas of the pad site not required for operations will be reclaimed. The original topsoil will be returned to the area of the drill pad not necessary to operate the well. These unused areas of the drill pad will be contoured, as close as possible, to match the original topography, and the area will be seeded with an approved BLM mixture to re-establish vegetation.

11. Surface Ownership:

The surface is owned by the U.S. Government and is administered by the BLM. The surface is multiple use with the primary uses of the region for the grazing of livestock and the production of oil and gas. The surface is leased to: Richardson Cattle Co., P.O. Box 487, Carlsbad, NM 88221. They will be notified of our intention to drill prior to any activity.

12. Other Information:

a. The vegetation cover is generally sparse consisting of mesquite, yucca, shinnery oak, sandsage and perennial native range grass. The topsoil is sandy in nature. Wildlife in the area is also sparse consisting of deer, coyotes, rabbits, rodents, reptiles, dove and quail.

b. There is no permanent or live water in the general proximity of the location.

c. There are no dwellings within one mile of the proposed well site.

d. Cultural Resources Examination–This well is located in the Permian Basin PA. Payment to be determined by BLM. This well shares the same pad as the Patton MDP1 17 Federal #3H, Sunrise MDP1 8-5 Federal Com #3H, 4H.

Pad + ¼ mile road	$1550.00	$.24/ft over ¼ mile	$ 0.00	$1550.00
Pipeline-up to 1 mile	$1431.00	$.27/ft over 1 mile	$ 0.00	$1431.00
Electric Line-up to 1 mile	$717.00	$.11/ft over 1 mile	$ 0.00	$ 717.00
Total	$3698.00		$ 0.00	$3698.00

e. Copy of this application has been mailed to SWCA Environmental Consultants, 5647 Jefferson St. NE, Albuquerque, NM 87109. No Potash leases within one mile of surface location.

13. Bond Coverage:

Bond coverage is Individual-NMB000862, Nationwide-ESB00226.

14. Operators Representatives:

The OXY Permian representatives responsible for ensuring compliance of the surface use plan are listed below:

Van Barton
Supt. Operations
1502 West Commerce Dr.
Carlsbad, NM 88220
Office – 575-628-4111
Cellular – 575-706-7671

Jim Wilson
Operation Specialist
P.O. Box 50250
Midland, TX 79710
Cellular – 575-631-2442

Corrie Hartman
Manager Asset
P.O. Box 4294
Houston, TX Carlsbad, NM 88220
Office – 713-215-7084
Cellular – 832-541-3190

Cuong Q. Phan
RMT Leader
P.O. Box 4294
Houston, TX 77210
Office – 713-513-6645
Cellular – 281-832-0978

Section 1 - General

Would you like to address long-term produced water disposal? NO

Section 2 - Lined Pits

Would you like to utilize Lined Pit PWD options? NO

Produced Water Disposal (PWD) Location:

PWD surface owner:

PWD disturbance (acres):

Lined pit PWD on or off channel:

Lined pit PWD discharge volume (bbl/day):

Lined pit specifications:

Pit liner description:

Pit liner manufacturers information:

Precipitated solids disposal:

Decribe precipitated solids disposal:

Precipitated solids disposal permit:

Lined pit precipitated solids disposal schedule:

Lined pit precipitated solids disposal schedule attachment:

Lined pit reclamation description:

Lined pit reclamation attachment:

Leak detection system description:

Leak detection system attachment:

Lined pit Monitor description:

Lined pit Monitor attachment:

Lined pit: do you have a reclamation bond for the pit?

Is the reclamation bond a rider under the BLM bond?

Lined pit bond number:

Lined pit bond amount:

Additional bond information attachment:

Section 3 - Unlined Pits

Would you like to utilize Unlined Pit PWD options? NO

Produced Water Disposal (PWD) Location:

PWD surface owner: **PWD disturbance (acres):**

Unlined pit PWD on or off channel:

Unlined pit PWD discharge volume (bbl/day):

Unlined pit specifications:

Precipitated solids disposal:

Decribe precipitated solids disposal:

Precipitated solids disposal permit:

Unlined pit precipitated solids disposal schedule:

Unlined pit precipitated solids disposal schedule attachment:

Unlined pit reclamation description:

Unlined pit reclamation attachment:

Unlined pit Monitor description:

Unlined pit Monitor attachment:

Do you propose to put the produced water to beneficial use?

Beneficial use user confirmation:

Estimated depth of the shallowest aquifer (feet):

Does the produced water have an annual average Total Dissolved Solids (TDS) concentration equal to or less than that of the existing water to be protected?

TDS lab results:

Geologic and hydrologic evidence:

State authorization:

Unlined Produced Water Pit Estimated percolation:

Unlined pit: do you have a reclamation bond for the pit?

Is the reclamation bond a rider under the BLM bond?

Unlined pit bond number:

Unlined pit bond amount:

Additional bond information attachment:

Section 4 - Injection

Would you like to utilize Injection PWD options? NO

Produced Water Disposal (PWD) Location:

PWD surface owner: **PWD disturbance (acres):**

Injection PWD discharge volume (bbl/day):

Injection well mineral owner:

Injection well type:

Injection well number:

Injection well name:

Assigned injection well API number?

Injection well API number:

Injection well new surface disturbance (acres):

Minerals protection information:

Mineral protection attachment:

Underground Injection Control (UIC) Permit?

UIC Permit attachment:

Section 5 - Surface Discharge

Would you like to utilize Surface Discharge PWD options? NO

Produced Water Disposal (PWD) Location:

PWD surface owner:

PWD disturbance (acres):

Surface discharge PWD discharge volume (bbl/day):

Surface Discharge NPDES Permit?

Surface Discharge NPDES Permit attachment:

Surface Discharge site facilities information:

Surface discharge site facilities map:

Section 6 - Other

Would you like to utilize Other PWD options? NO

Produced Water Disposal (PWD) Location:

PWD surface owner:

PWD disturbance (acres):

Other PWD discharge volume (bbl/day):

Other PWD type description:

Other PWD type attachment:

Have other regulatory requirements been met?

Other regulatory requirements attachment:

AFMSS

U.S. Department of the Interior
BUREAU OF LAND MANAGEMENT

Bond Info Data Report

10/13/2017

Bond Information

Federal/Indian APD: FED

BLM Bond number: ESB000226

BIA Bond number:

Do you have a reclamation bond? NO

Is the reclamation bond a rider under the BLM bond?

Is the reclamation bond BLM or Forest Service?

BLM reclamation bond number:

Forest Service reclamation bond number:

Forest Service reclamation bond attachment:

Reclamation bond number:

Reclamation bond amount:

Reclamation bond rider amount:

Additional reclamation bond information attachment: