ATS-08-503 RM

Form 3160-3
(August 1999)

R-111-POTASH

UNITED STATES
DEPARTMENT OF THE INTERIOR
BUREAU OF LAND MANAGEMENT

RECEIVED
OCD Artesia
JUN 22 2010
NMOCD ARTESIA

FORM APPROVED
OMB NO. 1004-0136
Expires: November 30, 2000

APPLICATION FOR PERMIT TO DRILL OR REENTER

5. Lease Serial No: NMNM0417696

1a. Type of Work: [X] DRILL [ ] REENTER

6. If Indian, Allotee or Tribe Name:

1b. Type of Well: [X] Oil Well [ ] Gas Well [ ] Other [X] Single Zone [ ] Multiple Zone

7. Unit or CA Agreement Name and No.:

2. Name of Operator: OXY USA Inc. <16696>

8. Lease Name and Well No.: Lost Tank 3 Federal # 19 <304875>

3a. Address: P.O. Box 50250 Midland, TX 79710-0250

3b. Phone No. (include area code): 432-685-5717

9. API Well No: 30-015-37952

4. Location of Well (*Report location clearly and in accordance with any State equirements*)*

At surface: 2558 FNL 185 FWL SWNW (E)

At proposed prod. zone: 549 FSL 661 FWL SWSW (M)

UNORTHODOX LOCATION

10. Field and Pool, or Exploratory: X Lost Tank Delaware, West <96582>

11. Sec., T., R., M., or Blk. and Survey or Area: Sec 3 T22S R31E

14. Distance in miles and direction from nearest town or post office*: 20 miles northeast from Loving, NM

12. County or Parish: Eddy

13. State: NM

15. Distance from proposed* location to nearest property or lease line, ft. (Also to nearest drg unit line, if any): 185'

16. No. of Acres in lease: 640

17. Spacing Unit dedicated to this well: 40

18. Distance from proposed location* to nearest well, drilling, completed, applied for, on this lease, ft: 50'

19. Proposed Depth: 8750' 8070' 8800'M 8100'V

20. BLM/BIA Bond No. on file: ES0136

21. Elevations (Show whether DF, KDB, RT, GL, etc: 3466.1' GL

22. Approximate date work will start*: 1/10

23. Estimated duration: 45

24. Attachments

The following, completed in accordance with the requirements of Onshore Oil and Gas Order No. 1, shall be attached to this form:

1. Well plat certified by a registered surveyor.
2. A Drilling Plan
3. A Surface Use Plan (if the location is on National Forest System Lands, the SUPO shall be filed with the appropriate Forest Service Office)
4. Bond to cover the operations unless covered by an existing bond on file (see Item 20 above).
5. Operator certification.
6. Such other site specific information and/or plans as may be required by the authorized officer.

25. Signature: [signature] | Name (*Printed/Typed*): David Stewart | Date: 9/9/09

Title: Sr. Regulatory Analyst

Approved by (Signautre): /S/ William Merhege | Name (*Printed/Typed*): /S/ William Merhege | Date: 6-11-10

Title: ACTING STATE DIRECTOR | Office: NM STATE OFFICE

Application approval does not warrant or certify that the applicant holds legal or equitable title to those rights in the subject lease which would entitle the applicant to conduct operations thereon.
Conditions of approval, if any, are attached.

APPROVAL FOR TWO YEARS

Title 18 U.S.C Section 1001 and Title 43 U.S.C. Section 1212, make it a crime for any person knowingly and willfully to make to any department or agency of the United States any false, fictitious or fraudulent statements or representations as to any matter within its jurisdiction.

*(*Instructions on Reverse*)

SEE ATTACHED FOR CONDITIONS OF APPROVAL

Carlsbad Controlled Water Basin

KZ

OCD CONDITION OF APPROVAL of Drilling:
Intent to drill ONLY --- CANNOT produce until the Non-Standard Location has been approved by OCD Santa Fe office

APPROVAL SUBJECT TO GENERAL REQUIREMENTS AND SPECIAL STIPULATIONS ATTACHED

District I
1625 N. French Dr., Hobbs, NM 88240
District II
1301 W. Grand Avenue, Artesia, NM 88210
District III
1000 Rio Brazos Rd., Aztec, NM 87410
District IV
1220 S. St. Francis Dr., Santa Fe, NM 87505

State of New Mexico
Energy, Minerals & Natural Resources Department
OIL CONSERVATION DIVISION
1220 South St. Francis Dr.
Santa Fe, NM 87505

Form C-102
Revised October 12, 2005
Submit to Appropriate District Office
State Lease- 4 Copies
Fee Lease- 3 Copies

☐ AMENDED REPORT

WELL LOCATION AND ACREAGE DEDICATION PLAT

API Number	Pool Code	Pool Name
30-015-37952	96582	Lost Tank Delaware, West

Property Code	Property Name	Well Number
301875	LOST TANK 3 FED.	19

OGRID No.	Operator Name	Elevation
16696	OXY USA INC.	3466.1'

Surface Location

UL or lot no.	Section	Township	Range	Lot Idn	Feet from the	North/South line	Feet from the	East/West line	County
E	3	22 SOUTH	31 EAST, N.M.P.M.		2558'	NORTH	185'	WEST	EDDY

Bottom Hole Location If Different From Surface

UL or lot no.	Section	Township	Range	Lot Idn	Feet from the	North/South line	Feet from the	East/West line	County
M	3	22 SOUTH	31 EAST, N.M.P.M.		549'	SOUTH	661'	WEST	EDDY

Dedicated Acres	Joint or Infill	Consolidation Code	Order No.
40	N		

No allowable will be assigned to this completion until all interests have been consolidated or a non-standard unit has been approved by the division.

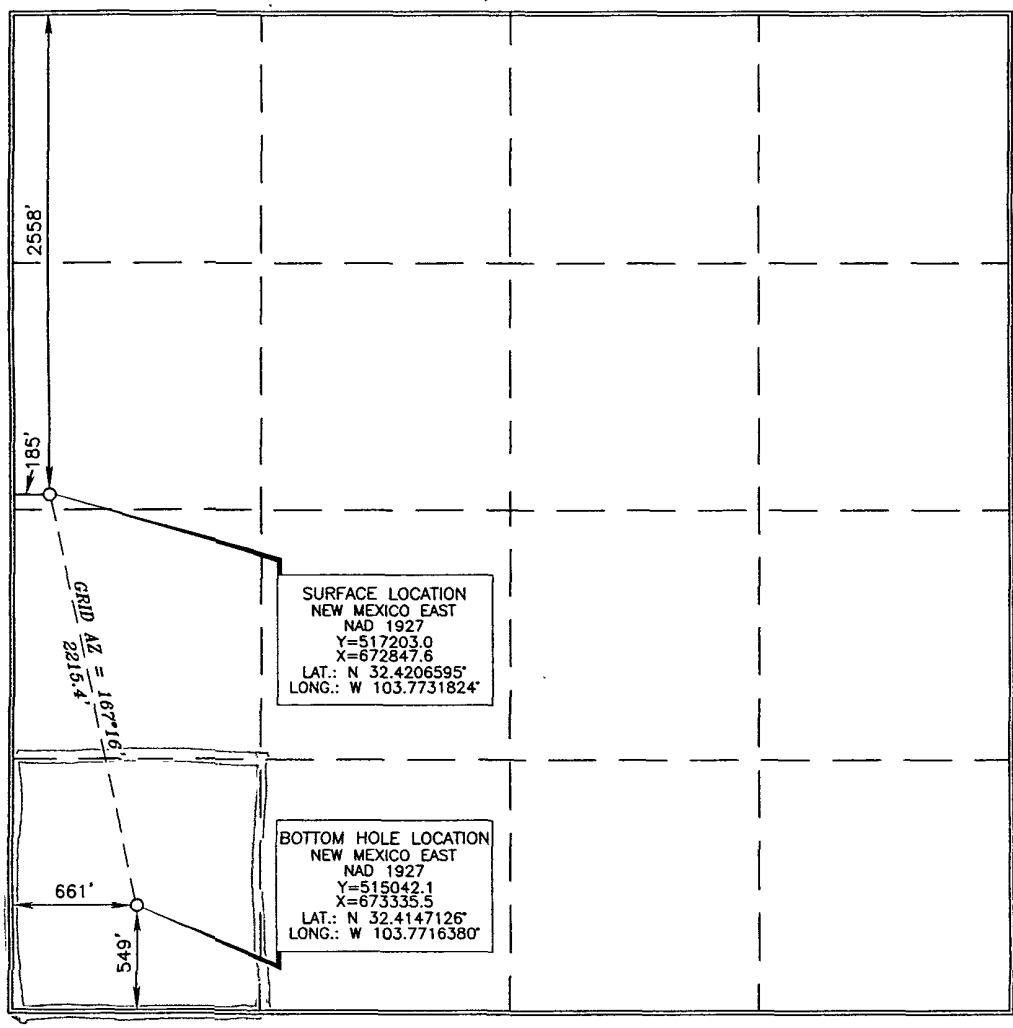

OPERATOR CERTIFICATION

I hereby certify that the information contained herein is true and complete to the best of my knowledge and belief, and that this organization either owns a working interest or unleased mineral interest in the land including the proposed bottom hole location or has a right to drill this well at this location pursuant to a contract with an owner of such a mineral or working interest, or to a voluntary pooling agreement or a compulsory pooling order heretofore entered by the division.

Signature — Date: 9/9/09

David Stewart
Printed Name

SURVEYOR CERTIFICATION

I hereby certify that the well location shown on this plat was plotted from field notes of actual surveys made by me or under my supervision, and that the same is true and correct to the best of my belief.

APRIL 30, 2009
Date of Survey

Signature and Seal of Professional Surveyor:

Terry J. Asel 8/31/2009
Certificate Number 15079

WO# 080910WL-f (Rev. A) (KA)

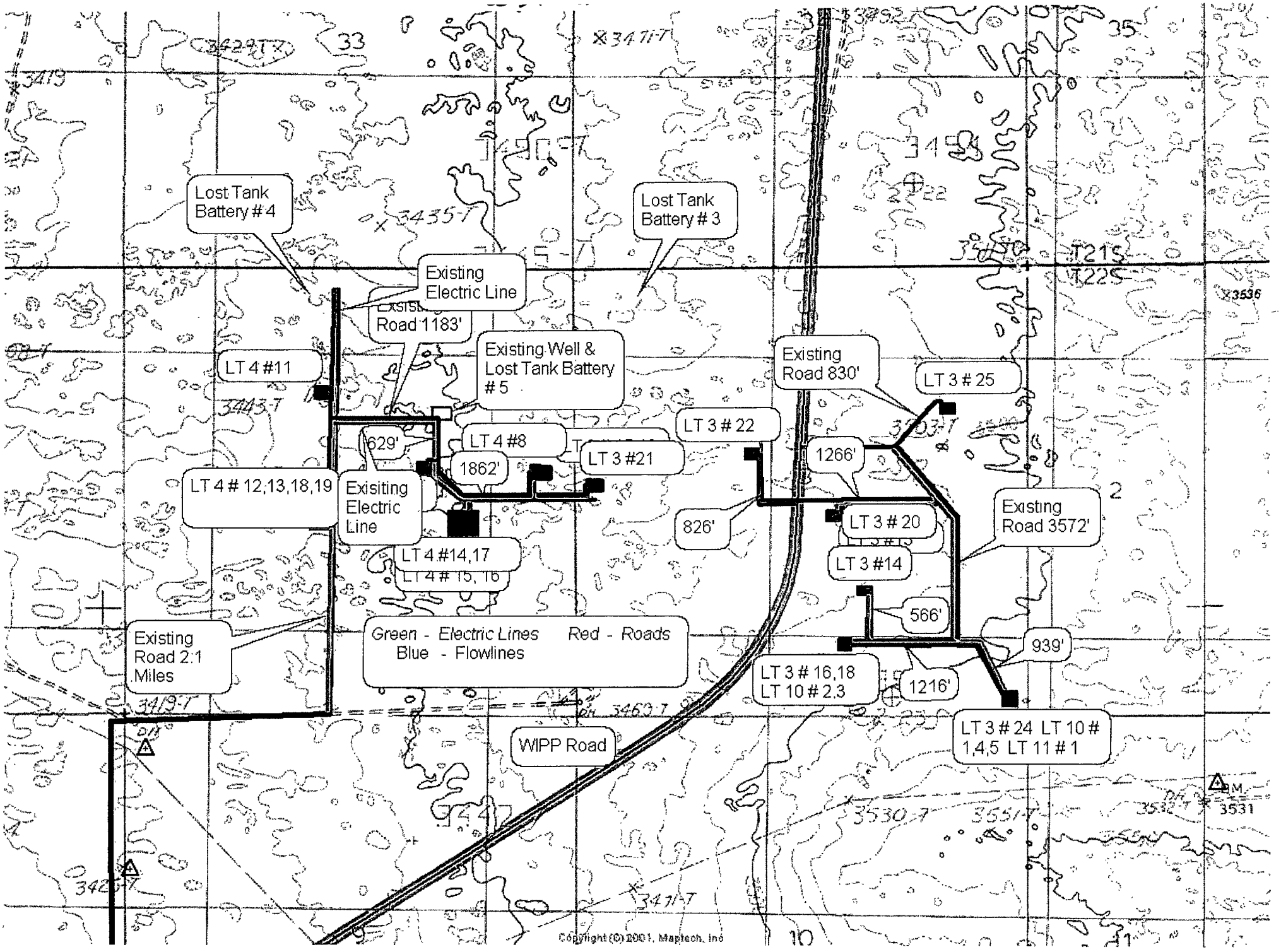
Lost Tank Battery # 4
Lost Tank Battery # 3
Existing Electric Line
Existing Road 1183'
Existing Well & Lost Tank Battery # 5
LT 4 #11
Existing Road 830'
LT 3 # 25
LT 3 # 22
LT 4 #8
629'
1862'
LT 3 #21
1266'
LT 4 # 12,13,18,19
Exisiting Electric Line
826'
LT 3 # 20
Existing Road 3572'
LT 4 #14,17
LT 3 #14
566'
Existing Road 2:1 Miles
Green - Electric Lines Red - Roads
Blue - Flowlines
939'
LT 3 # 16,18
LT 10 # 2,3
1216'
LT 3 # 24 LT 10 # 1,4,5 LT 11 # 1
WIPP Road
Copyright (C) 2001, Maptech, Inc

Lost Tank 3 Federal

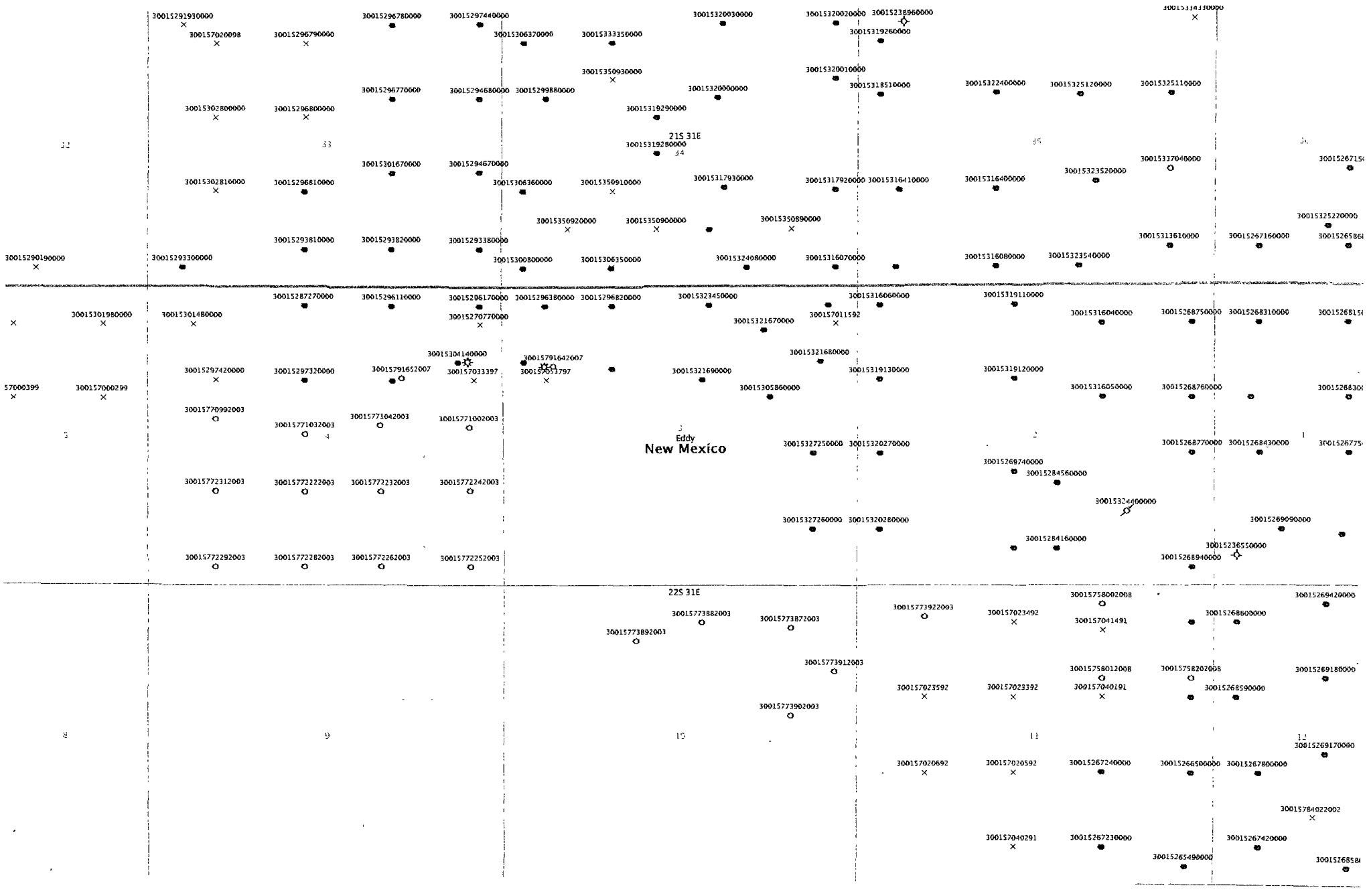

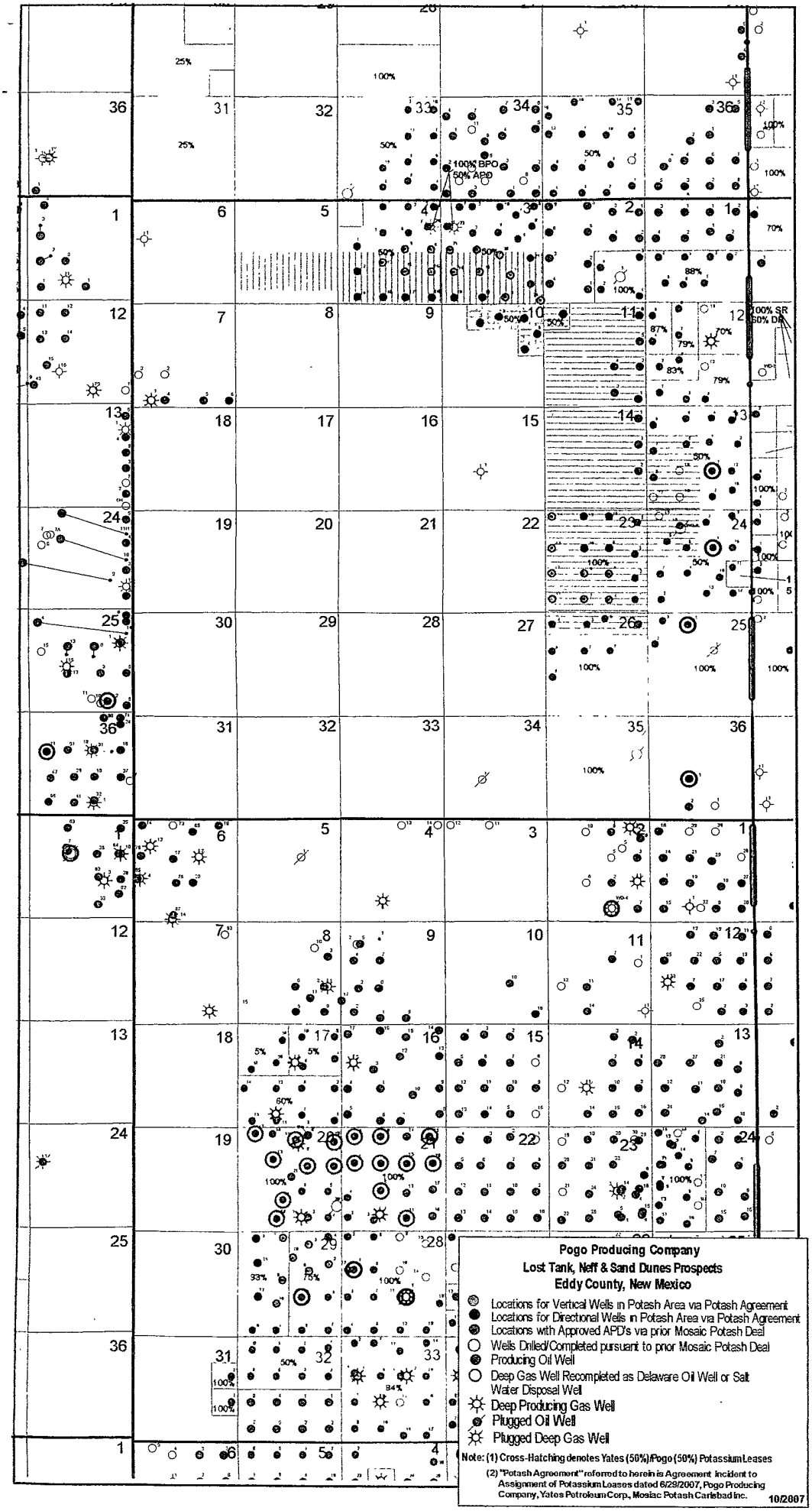
Pogo Producing Company
Lost Tank, Neff & Sand Dunes Prospects
Eddy County, New Mexico
Locations for Vertical Wells in Potash Area via Potash Agreement
Locations for Directional Wells in Potash Area via Potash Agreement
Locations with Approved APD's via prior Mosaic Potash Deal
Wells Drilled/Completed pursuant to prior Mosaic Potash Deal
Producing Oil Well
Deep Gas Well Recompleted as Delaware Oil Well or Salt Water Disposal Well
Deep Producing Gas Well
Plugged Oil Well
Plugged Deep Gas Well
Note: (1) Cross-Hatching denotes Yates (50%)/Pogo (50%) Potassium Leases
(2) "Potash Agreement" referred to herein is Agreement Incident to Assignment of Potassium Leases dated 6/29/2007, Pogo Producing Company, Yates Petroleum Corp., Mosiac Potash Carlsbad Inc.
10/2007

OXY USA INC.

SURVEY OF PROPOSED ROAD, ELECTRIC LINE, AND FLOWLINE TO LOST TANK 3 FED. #19 WELL LOCATION LOCATED IN SECTION 3, TOWNSHIP 22 SOUTH, RANGE 31 EAST, N.M.P.M., EDDY COUNTY, NEW MEXICO

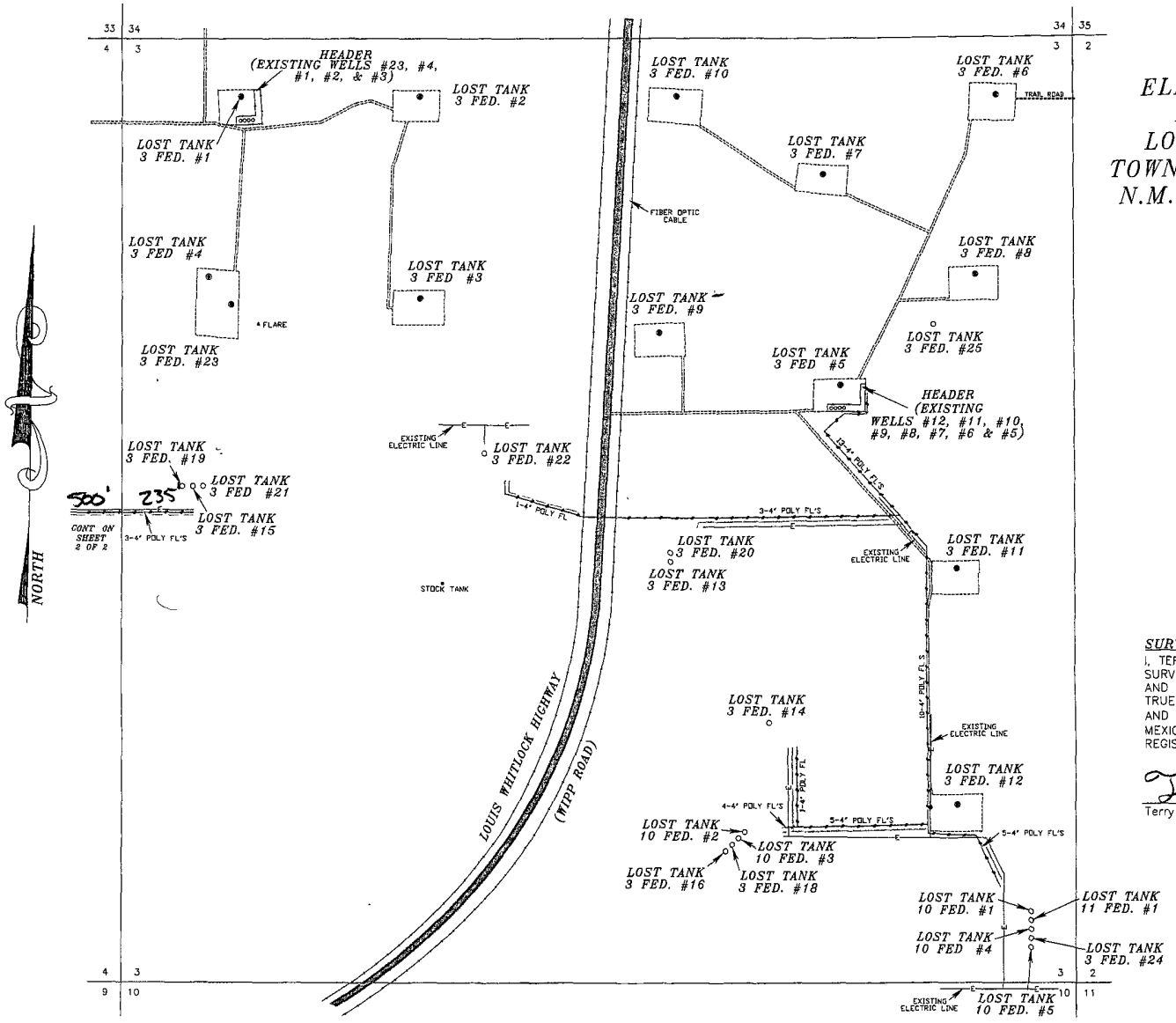

WELL NAME	ELECTRIC LINE	PIPELINE	ROAD	
LOST TANK 3 FED #19	2639.9'	5403.7'	2578.0'	ON LEASE
	–	–	–	OFF LEASE

LEGEND

- ◉ — DENOTES EXISTING WELL (AS NOTED)
- ○ — DENOTES PROPOSED NEW WELL (AS NOTED)
- —//— DENOTES PROPOSED PIPELINE
- —E— DENOTES PROPOSED ELECTRIC LINE
- —— DENOTES PROPOSED ROAD

600' 0 600' 1200 FEET

SCALE: 1" = 600'

TERRY J. ASEL NEW MEXICO 15079 REGISTERED PROFESSIONAL LAND SURVEYOR

SURVEYORS CERTIFICATE

I, TERRY J ASEL, NEW MEXICO REGISTERED PROFESSIONAL LAND SURVEYOR NO 15079, DO HEREBY CERTIFY THAT I CONDUCTED AND AM RESPONSIBLE FOR THIS SURVEY, THAT THIS SURVEY IS TRUE AND CORRECT TO THE BEST OF MY KNOWLEDGE AND BELIEF, AND MEETS THE "MINIMIUM STANDARDS FOR SURVEYING IN NEW MEXICO" AS ADOPTED BY THE NEW MEXICO STATE BOARD OF REGISTRATION FOR PROFESSIONAL ENGINEERS AND SURVEYORS

Terry J. Asel 8/31/2009

Terry J Asel N M R P S No 15079 DATE

Asel Surveying

P O BOX 393 – 310 W TAYLOR
HOBBS, NEW MEXICO – 575-393-9146

OXY USA INC.	Work Order # 090803RPE-ww
Date Surveyed 06/29/2009	Surveyed by Terry Asel
DWG # 090803RPE-ww dwg	Drafted By. KA
Scale: 1" = 600'	Sheet 1 of 1

DRILLING PROGRAM

Operator Name	**OXY USA Inc.**	**16696**	
Lease Name/Number	**Lost Tank 3 Federal #19**	**304875**	**Federal Lease No. NMNM0417696**
Pool Name/Number:	**Lost Tank Delaware, West**	**96582**	
Surface Location:	**2558 FNL 185 FWL SWNW(E)**	**Sec 3 T22S R31E**	
Bottom Hole Location:	**549 FSL 661 FWL SWSW(M)**	**Sec 3 T22S R31E**	

Proposed TD: ~~8100'~~ 8070 **TVD** ~~8800'~~ 8750 RGH 10/14/09 **TMD** **Elevation: 3466.1'**

SL-Lat: 32.4206595 Long: 103.7716380 X=672847.6 Y=517203.0 NAD - 1927

BHL-Lat: 32.4147126 Long: 103.7716380 X=673335.5 Y=515042.1 NAD - 1927

1. Geologic Name of Surface Formation:

a. Permian

2. Estimated Tops of Geological Markers & Depths of Anticipated Fresh Water, Oil or Gas:

Geological Marker	Depth	Type
a. Upper Permian Sand	450'	Water
b. Rustler	649'	---
c. Top Salt - Salado	954'	---
d. Bottom Salt	3944'	---
e. Delaware	4230'	Oil
f. Bell Canyon	4289'	Oil
g. Cherry Canyon	5201'	Oil
h. Brushy Canyon	6484'	Oil
i. Bone Springs	8108'	Oil

3. Casing Program:

Hole Size	Interval	OD Csg	Weight	Collar	Grade	Condition	Collapse Design Factor	Burst Design Factor	Tension Design Factor
14-3/4"	680'	11-3/4"	42#	ST&C	H40	New	8.69	5.69	2.37
10-5/8"	4000'	8-5/8"	32#	LT&C	J55	New	2.32	1.31	2
	8750'								
7-7/8"	~~8800'~~	5-1/2"	17#	LT&C	J55	New	1.27	1.4	1.94
	DVT-5900' DVT/ECPT-4050'								

4. Cement Program

a. 11-3/4" Surface Circulate cement to Surface w/ 330sx PP w/ 4% Bentonite + 2% CaCl2, 13.5 ppg 1.74 yield followed by 270sx PP w/ 2% $CaCl_2$., 14.8 ppg 1.34 yield

b. 8-5/8" Intermediate Circulate cement to surface w/ 880sx HES light PP w/ 5% Salt + 5#/sx Gilsonite + .125#/sx Poly-E-Flake 12.9 ppg 1.87 yield followed by 200sx PP, 14.8 ppg 1.32 yield.

c. 5-1/2" Production Cement 1st stage w/ 520sx Super H w/ .5% LAP-1 + .4% CFR-3 + 5#/sx Gilsonite + 3#/sx Salt + .25#/sx D-AIR 3000 +.3% HR-800, 13.2ppg 1.66 yield
Cement 2nd stage w/ 590sx Super H w/ .5% LAP-1 + .4% CFR-3 + 5#/sx Gilsonite + 3#/sx Salt + .25#/sx D-AIR 3000 13.2ppg 1.66 yield
Cement 3rd stage w/ 310sx IFC w/ .5% LAP-1 + .25#/sx D-AIR 3000 11.5ppg 2.79 yield followed by 100sx PP 14.8ppg 1.33 yield Estimated TOC @ Surface.

The above cement volumes could be revised pending the caliper measurement.

5. Pressure Control Equipment:

Surface 0-680' None

Production 680- 8800' 11" X 5M Double Ram, 11" X 3M Annular, 5M Choke Manifold

See COA

All BOP's and associated equipment will be tested to 1200psi with the rig pump before drilling out the 11-3/4" casing shoe. Prior to drilling out the 8-5/8" casing shoe, the BOP's and Hydril will be tested as per BLM Drilling Operations Order #2.

Pipe Rams will be operated and checked each 24-hour period and each time the drill pipe is out of the hole. These functional tests will be documented on the daily driller's log. A 2" kill line and 3" choke line will be incorporated in the drilling spool below the ram-type BOP. Other accessory BOP equipment will include a Kelly cock, floor safety valve, choke lines and choke manifold having a 5000 psi WP rating.

See COA

Request variance to connect BOP outlet to the choke manifold a flex line that is manufactured by Contitech Rubber Industrial KFT. It is a 3" ID X 35' flexible hose rated to 10000psi working pressure. It has been tested to 15000psi and is built to API Spec 16C. Once the flex line is installed, it will be tied down with safety clamps, certification attached.

6. Proposed Mud Circulation System

Depth	Mud Wt. ppg	Visc sec	Fluid Loss	Type System
0-680'	8.4-8.8	32-34	NC	Fresh Water/MI Gel Spud Mud
680-4000'	9.9-10.0	28-29	NC	Brine Water
4000-7900'	8.4-8.5	28-29	NC	Fresh Water
7900-8800"	9.5-9.6	32-36	10-15	FW Mud/Duo Vis/Poly Pac R

The necessary mud products for weight additional and fluid loss control will be on location at all times.

7. Auxiliary Well Control and Monitoring Equipment:

a. A Kelly cock will be in the drill string at all times.
b. A full opening drill pipe stabbing valve having the appropriate connections will be on the rig floor at all times.
c. Hydrogen Sulfide detection equipment will be in operation after drilling out the surface casing shoe until the production casing is cemented. Breathing equipment will be on location upon drilling the surface casing shoe until total depth is reached.

8. Logging, Coring and Testing Program:

a. Drill stem tests are not anticipated but if done will be based on geological sample shows.
See COA — b. The open hole electrical logging program will consist of Triple Combo - CNL\LDT\DLL.
c. No coring program is planned but if done will be sidewall rotary cores.
d. Mud logging program will be initiated from 4000' to TD.

9. Potential Hazards:

No abnormal pressures, temperatures or H_2S gas are expected. The highest anticipated pressure gradient would 0.55psi/ft. If H_2S is encountered the operator will comply with the provisions of Onshore Oil & Gas Order No. 6.

No lost circulation is expected to occur. All personnel will be familiar with all aspects of safe operation of equipment being used to drill this well. Adequate flare lines will be installed off the mud/gas separator where gas may be flared safely.

10. Anticipated Starting Date and Duration of Operations:

Road and location construction will begin after the BLM has approved the APD. Anticipated spud date will be as soon as possible after BLM approval and as soon as a rig will be available. Move in operations and drilling is expected to take 45 days. If production casing is run, then an additional 30 days will be needed to complete the well and construct surface facilities and/or lay flow lines in order to place well on production.

OXY Permian

T M

Azimuths to Grid North
True North: -0 30°
Magnetic North: 7 60°

Magnetic Field
Strength 48920 9snT
Dip Angle: 60 39°
Date: 2009/08/27
Model IGRF200510

PATHFINDER®

Project: Eddy County, NM
Site: Lost Tank 3 Federal Pad
Well: Well #19
Wellbore: OH
Plan: Plan #1 (Well #19/OH)

WELL DETAILS: Well #19

Ground Elevation: 3466.10
RKB Elevation: RKB to MSL @ 3482.60ft (Flex 4)
Rig Name: Flex 4

+N/-S	+E/-W	Northing	Easting	Latitude	Longitude	Slot
0.00	0.00	517203.00	672847.60	32° 25' 14.37390 N	103° 46' 23.45626 W	

CASING DETAILS

TVD	MD	Name	Size
4200.00	4200.00	8 5/8"	8-5/8

SECTION DETAILS

Sec	MD	Inc	Azi	TVD	+N/-S	+E/-W	DLeg	TFace	VSec	Target
1	0.00	0.00	0.00	0.00	0.00	0.00	0.00	0.00	0.00	
2	4200.00	0.00	0.00	4200.00	0.00	0.00	0.00	0.00	0.00	
3	6068.15	37.36	167.28	5938.54	-573.41	129.47	2.00	167.28	587.84	
4	8749.90	37.36	167.28	8070.00	-2160.90	487.90	0.00	0.00	2215.30	LT 3 Fed #19 BHL

WELLBORE TARGET DETAILS (MAP CO-ORDINATES)

Name	TVD	+N/-S	+E/-W	Northing	Easting	Shape
LT 3 Fed #19 BHL	8070.00	-2160.90	487.90	515042.10	673335.50	Point

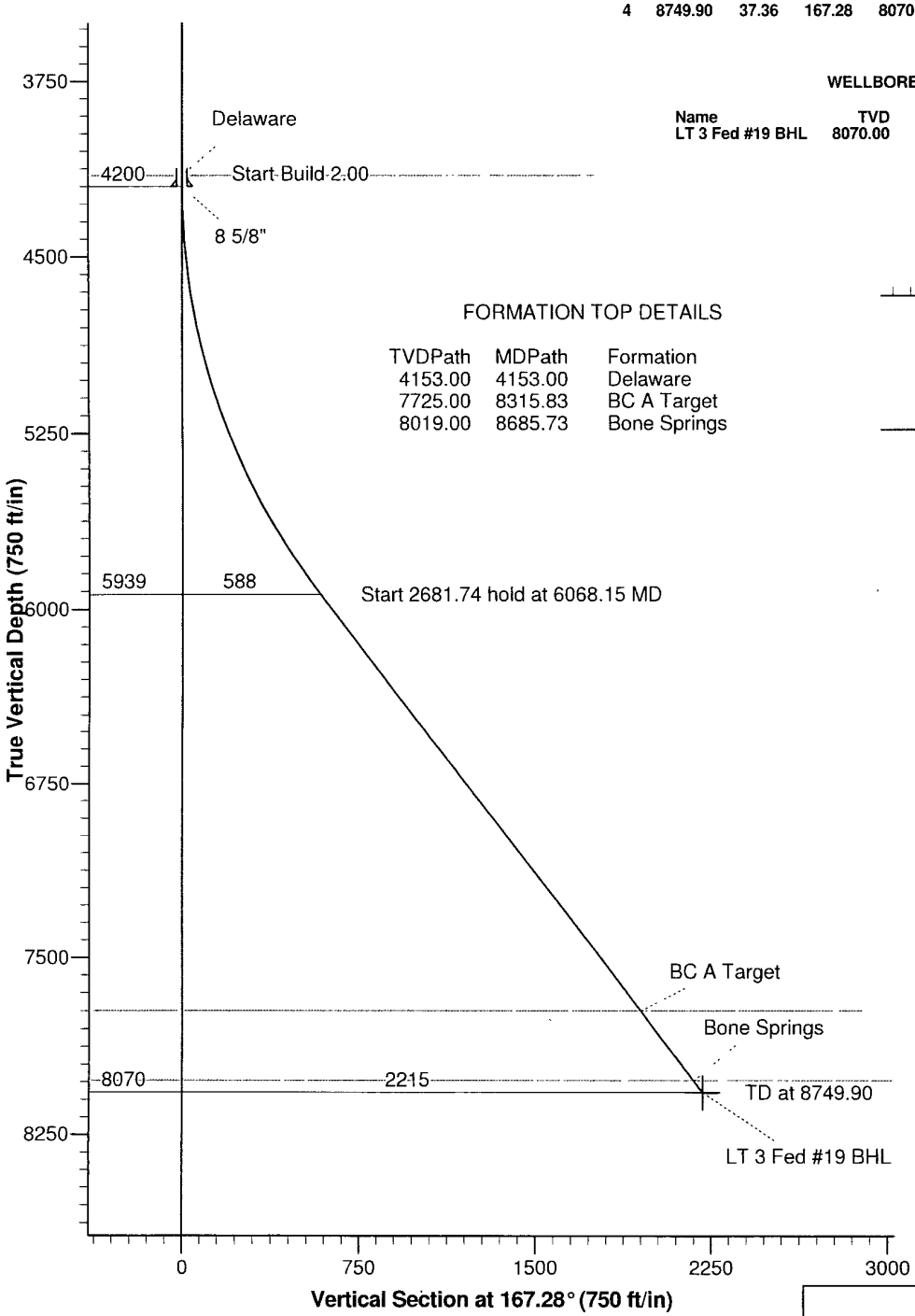

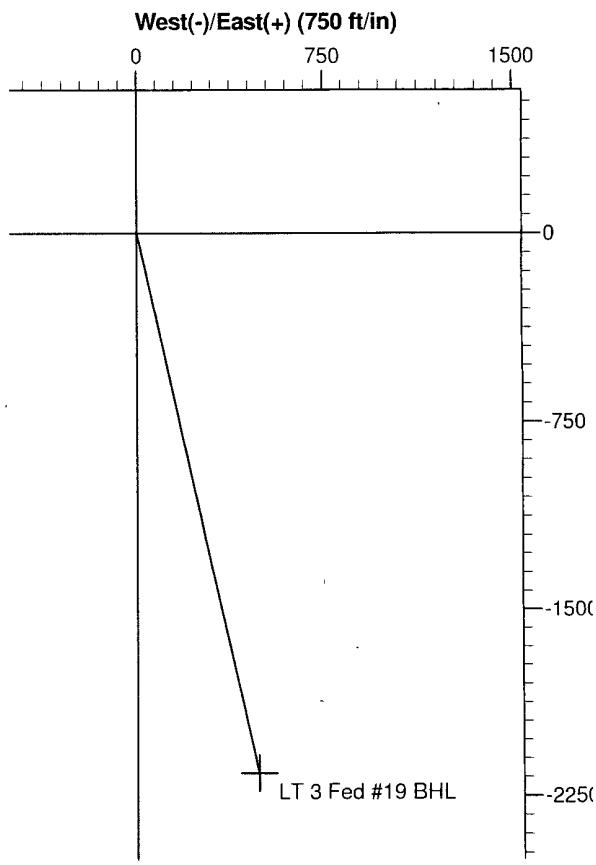

PROJECT DETAILS: Eddy County, NM
Geodetic System: US State Plane 1927 (Exact solution)
Datum: NAD 1927 (NADCON CONUS)
Ellipsoid: Clarke 1866
Zone: New Mexico East 3001

System Datum: Mean Sea Level
Local North: Grid

Plan: Plan #1 (Well #19/OH)
Created By: Kurt Otto Date: 10:12, August 27 2009

PathFinder Energy Services

Global X&Y Report

Company:	OXY Permian	Local Co-ordinate Reference:	Well Well #19
Project:	Eddy County, NM	TVD Reference:	RKB to MSL @ 3482.60ft (Flex 4)
Site:	Lost Tank 3 Federal Pad	MD Reference:	RKB to MSL @ 3482.60ft (Flex 4)
Well:	Well #19	North Reference:	Grid
Wellbore:	OH	Survey Calculation Method:	Minimum Curvature
Design:	Plan #1	Database:	Landmark Network DB

Project Eddy County, NM

Map System:	US State Plane 1927 (Exact solution)	**System Datum:**	Mean Sea Level
Geo Datum:	NAD 1927 (NADCON CONUS)		
Map Zone:	New Mexico East 3001		

Site Lost Tank 3 Federal Pad

Site Position:		**Northing:**	517,203.00 ft	**Latitude:**	32° 25' 14.37390 N
From:	Map	**Easting:**	672,847.60 ft	**Longitude:**	103° 46' 23.45626 W
Position Uncertainty:	0.00 ft	**Slot Radius:**	"	**Grid Convergence:**	0.30 °

Well Well #19

Well Position	**+N/-S**	0.00 ft	**Northing:**	517,203.00 ft	**Latitude:**	32° 25' 14.37390 N
	+E/-W	0.00 ft	**Easting:**	672,847.60 ft	**Longitude:**	103° 46' 23.45626 W
Position Uncertainty		0.00 ft	**Wellhead Elevation:**	ft	**Ground Level:**	3,466.10 ft

Wellbore OH

Magnetics	Model Name	Sample Date	Declination (°)	Dip Angle (°)	Field Strength (nT)
	IGRF200510	2009/08/27	7.90	60.39	48,921

Design Plan #1

Audit Notes:

Version:		**Phase:**	PLAN	**Tie On Depth:**	0.00

Vertical Section:	Depth From (TVD) (ft)	+N/-S (ft)	+E/-W (ft)	Direction (°)
	0.00	0.00	0.00	167.28

Survey Tool Program Date 2009/08/27

From (ft)	To (ft)	Survey (Wellbore)	Tool Name	Description
0.00	8,749.90	Plan #1 (OH)	MWD	MWD - Standard

Company:	OXY Permian	Local Co-ordinate Reference:	Well Well #19
Project:	Eddy County, NM	TVD Reference:	RKB to MSL @ 3482.60ft (Flex 4)
Site:	Lost Tank 3 Federal Pad	MD Reference:	RKB to MSL @ 3482.60ft (Flex 4)
Well:	Well #19	North Reference:	Grid
Wellbore:	OH	Survey Calculation Method:	Minimum Curvature
Design:	Plan #1	Database:	Landmark Network DB

Planned Survey

MD (ft)	Inc (°)	Azi (°)	TVD (ft)	TVDSS (ft)	V. Sec (ft)	Northing (ft)	Easting (ft)	DLeg (°/100ft)
4,153.00	0.00	0.00	4,153.00	-670.40	0.00	517,203.00	672,847.60	0.00
Delaware								
4,200.00	0.00	0.00	4,200.00	-717.40	0.00	517,203.00	672,847.60	0.00
4,300.00	2.00	167.28	4,299.98	-817.38	1 75	517,201.30	672,847.98	2.00
4,400.00	4.00	167 28	4,399.84	-917.24	6.98	517,196.19	672,849.14	2.00
4,500.00	6.00	167 28	4,499.45	-1,016.85	15.69	517,187.69	672,851.06	2.00
4,600.00	8.00	167.28	4,598.70	-1,116 10	27.88	517,175.80	672,853.74	2.00
4,700.00	10.00	167.28	4,697.47	-1,214.87	43.52	517,160.55	672,857.19	2.00
4,800.00	12.00	167.28	4,795.62	-1,313.02	62.60	517,141.93	672,861.39	2.00
4,900 00	14.00	167.28	4,893.06	-1,410.46	85.10	517,119.99	672,866.34	2.00
5,000.00	16 00	167.28	4,989.64	-1,507.04	110.98	517,094.75	672,872.04	2.00
5,100.00	18.00	167.28	5,085 27	-1,602.67	140.21	517,066.23	672,878.48	2.00
5,200.00	20.00	167.28	5,179.82	-1,697.22	172.77	517,034.47	672,885.65	2.00
5,300.00	22.00	167.28	5,273.17	-1,790.57	208.60	516,999.52	672,893.54	2.00
5,400.00	24.00	167 28	5,365.21	-1,882.61	247.67	516,961.41	672,902.15	2.00
5,500.00	26 00	167.28	5,455.84	-1,973.24	289.93	516,920.18	672,911.46	2.00
5,600.00	28.00	167.28	5,544.94	-2,062.34	335 33	516,875.90	672,921.45	2.00
5,700.00	30 00	167.28	5,632.39	-2,149.79	383.81	516,828.61	672,932.13	2 00
5,800 00	32.00	167 28	5,718 11	-2,235.51	435.31	516,778.38	672,943 47	2 00
5,900.00	34.00	167.28	5,801.97	-2,319.37	489.77	516,725.25	672,955.47	2.00
6,000.00	36.00	167.28	5,883 88	-2,401.28	547.13	516,669.31	672,968.10	2.00
6,068.15	37.36	167.28	5,938 54	-2,455.94	587.84	516,629 59	672,977 07	2.00
6,100.00	37 36	167.28	5,963 85	-2,481.25	607.17	516,610.74	672,981.32	0.00
6,200.00	37 36	167.28	6,043.33	-2,560.73	667.85	516,551.55	672,994.69	0.00
6,300.00	37.36	167.28	6,122.81	-2,640.21	728.54	516,492.35	673,008.05	0.00
6,400.00	37.36	167.28	6,202.29	-2,719.69	789.22	516,433.15	673,021.42	0 00
6,500.00	37.36	167.28	6,281.77	-2,799.17	849.91	516,373.96	673,034.79	0.00

Company:	OXY Permian	Local Co-ordinate Reference:	Well Well #19
Project:	Eddy County, NM	TVD Reference:	RKB to MSL @ 3482.60ft (Flex 4)
Site:	Lost Tank 3 Federal Pad	MD Reference:	RKB to MSL @ 3482.60ft (Flex 4)
Well:	Well #19	North Reference:	Grid
Wellbore:	OH	Survey Calculation Method:	Minimum Curvature
Design:	Plan #1	Database:	Landmark Network DB

Planned Survey

MD (ft)	Inc (°)	Azi (°)	TVD (ft)	TVDSS (ft)	V. Sec (ft)	Northing (ft)	Easting (ft)	DLeg (°/100ft)
6,600.00	37.36	167.28	6,361.25	-2,878.65	910.60	516,314.76	673,048.15	0.00
6,700.00	37.36	167.28	6,440.73	-2,958.13	971.28	516,255.57	673,061 52	0.00
6,800.00	37 36	167.28	6,520.21	-3,037.61	1,031 97	516,196.37	673,074.88	0.00
6,900.00	37.36	167.28	6,599.69	-3,117 09	1,092.66	516,137.17	673,088 25	0 00
7,000.00	37.36	167.28	6,679.17	-3,196.57	1,153.34	516,077.98	673,101.61	0.00
7,100.00	37.36	167.28	6,758.65	-3,276.05	1,214.03	516,018.78	673,114.98	0.00
7,200.00	37 36	167.28	6,838.13	-3,355.53	1,274.72	515,959.58	673,128.35	0.00
7,300.00	37.36	167.28	6,917.61	-3,435.01	1,335.40	515,900.39	673,141.71	0.00
7,400.00	37.36	167.28	6,997.09	-3,514.49	1,396.09	515,841.19	673,155.08	0.00
7,500.00	37.36	167.28	7,076.57	-3,593.97	1,456.78	515,781.99	673,168.44	0.00
7,600.00	37.36	167.28	7,156.06	-3,673.46	1,517.46	515,722.80	673,181.81	0 00
7,700.00	37.36	167 28	7,235.54	-3,752 94	1,578.15	515,663.60	673,195.17	0.00
7,800.00	37.36	167.28	7,315.02	-3,832.42	1,638.84	515,604.41	673,208.54	0.00
7,900 00	37.36	167.28	7,394.50	-3,911.90	1,699.52	515,545.21	673,221.91	0.00
8,000.00	37.36	167.28	7,473.98	-3,991.38	1,760 21	515,486.01	673,235.27	0.00
8,100.00	37.36	167.28	7,553.46	-4,070.86	1,820.90	515,426.82	673,248 64	0.00
8,200.00	37.36	167.28	7,632.94	-4,150.34	1,881.58	515,367.62	673,262.00	0.00
8,300.00	37.36	167.28	7,712.42	-4,229.82	1,942.27	515,308.42	673,275.37	0.00
8,315.83	37.36	167.28	7,725.00	-4,242.40	1,951.87	515,299.05	673,277 48	0.00
BC A Target								
8,400.00	37.36	167.28	7,791.90	-4,309.30	2,002.95	515,249 23	673,288.73	0.00
8,500.00	37.36	167.28	7,871.38	-4,388.78	2,063.64	515,190.03	673,302.10	0.00
8,600.00	37.36	167.28	7,950.86	-4,468.26	2,124.33	515,130.83	673,315.47	0.00
8,685.73	37.36	167 28	8,019.00	-4,536.40	2,176.36	515,080 08	673,326.92	0.00
Bone Springs								
8,700.00	37.36	167.28	8,030.34	-4,547.74	2,185.01	515,071.64	673,328.83	0.00

Company:	OXY Permian	Local Co-ordinate Reference:	Well Well #19
Project:	Eddy County, NM	TVD Reference:	RKB to MSL @ 3482.60ft (Flex 4)
Site:	Lost Tank 3 Federal Pad	MD Reference:	RKB to MSL @ 3482.60ft (Flex 4)
Well:	Well #19	North Reference:	Grid
Wellbore:	OH	Survey Calculation Method:	Minimum Curvature
Design:	Plan #1	Database:	Landmark Network DB

Planned Survey

MD (ft)	Inc (°)	Azi (°)	TVD (ft)	TVDSS (ft)	V. Sec (ft)	Northing (ft)	Easting (ft)	DLeg (°/100ft)
8,749.90	37.36	167.28	8,070.00	-4,587.40	2,215.30	515,042 10	673,335.50	0.00
LT 3 Fed #19 BHL								

Targets

Target Name - hit/miss target - Shape	Dip Angle (°)	Dip Dir. (°)	TVD (ft)	+N/-S (ft)	+E/-W (ft)	Northing (ft)	Easting (ft)	Latitude	Longitude
LT 3 Fed #19 BHL - plan hits target center - Point	0.00	0.00	8,070.00	-2,160.90	487.90	515,042.10	673,335 50	32° 24' 52 96516 N	03° 46' 17 89685 W

Formations

Measured Depth (ft)	Vertical Depth (ft)	Name	Lithology	Dip (°)	Dip Direction (°)
8,315.83	7,725.00	BC A Target		0.00	
8,685.73	8,019.00	Bone Springs		0.00	
4,153.00	4,153.00	Delaware		0.00	

Checked By: _____ Approved By: _____ Date: _____

OXY FLEX IV PAD (Closed Loop System)

Revised 05/14/2009

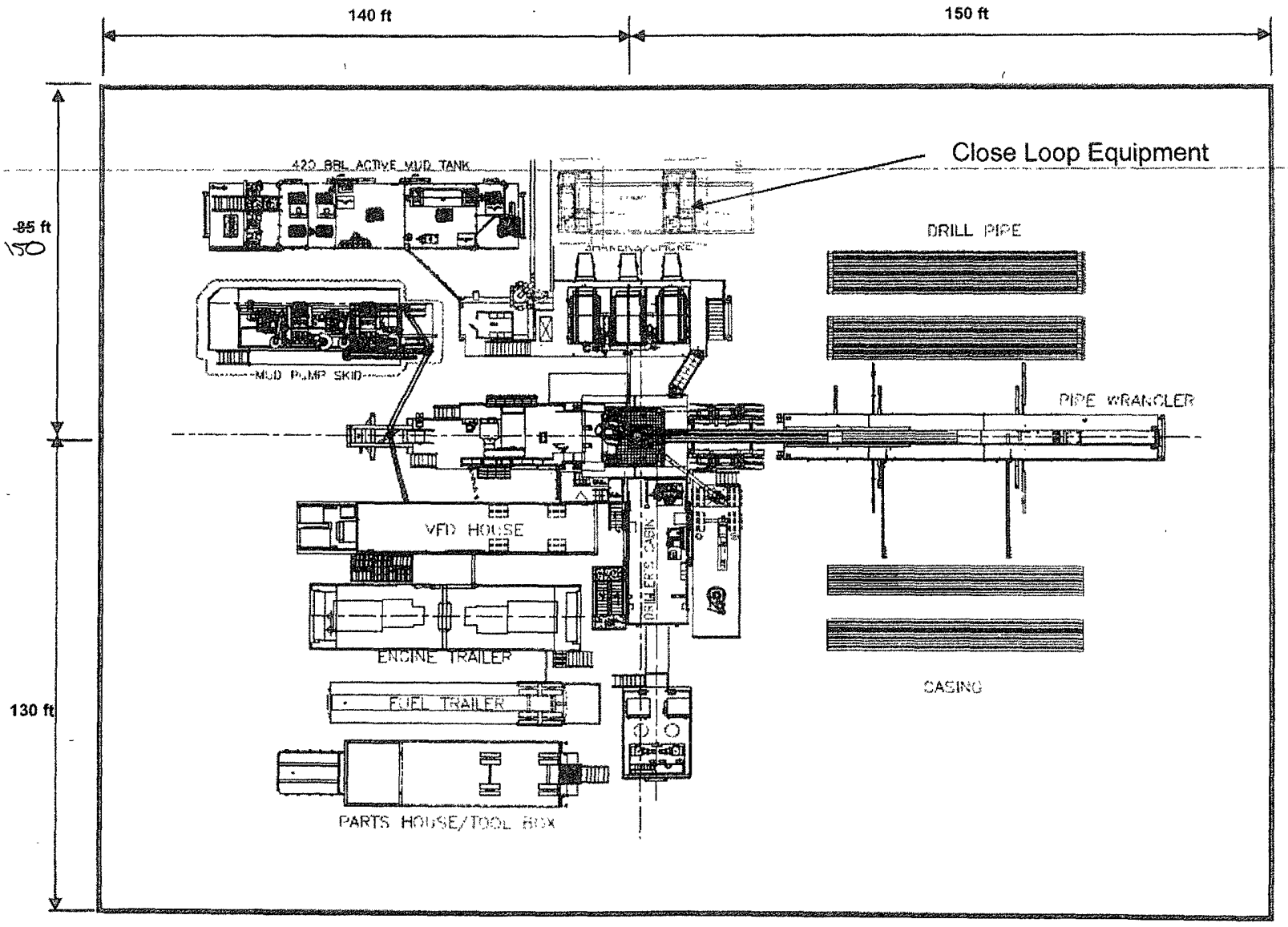

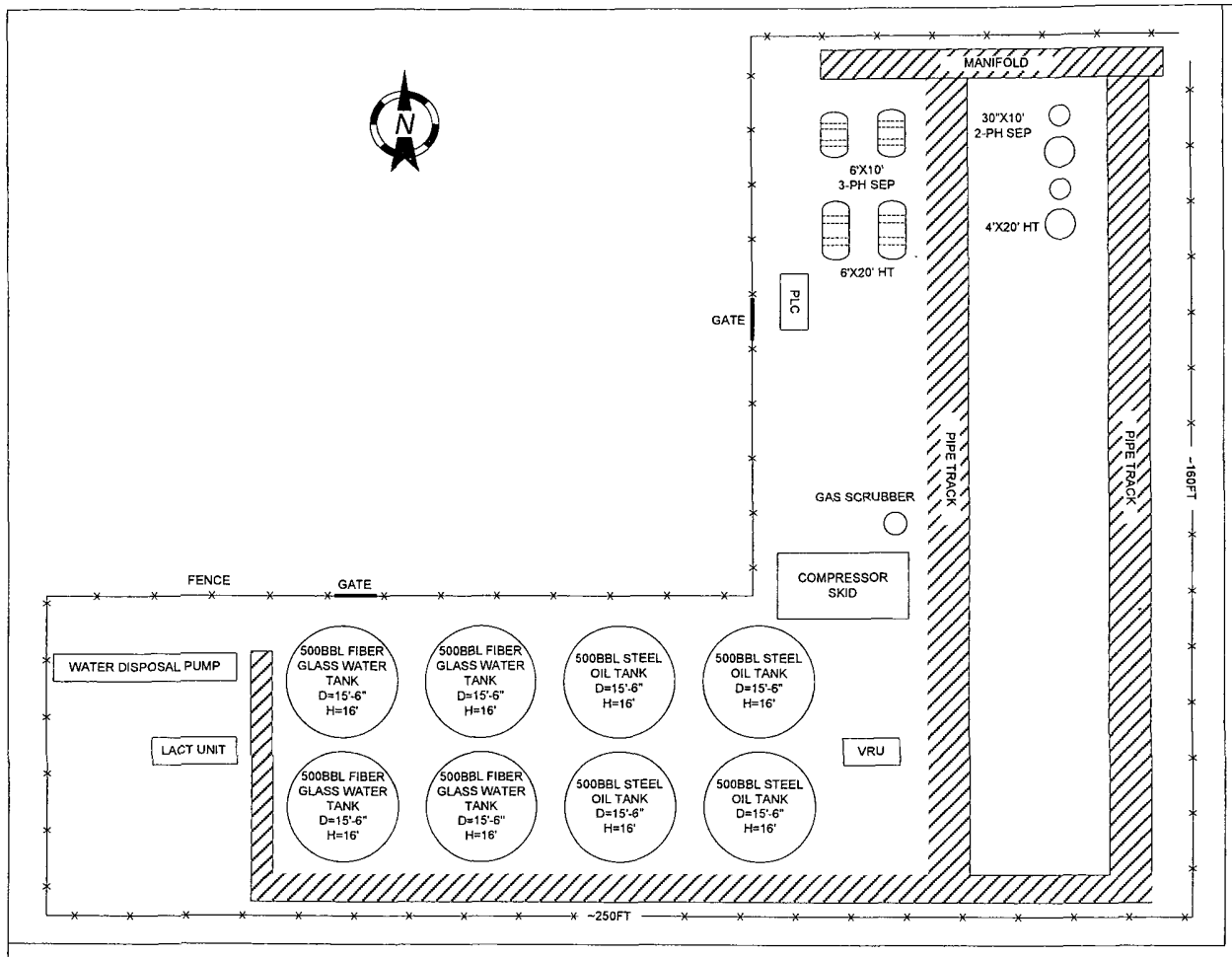

REV	DESCRIPTION	DATE	BY
0	Issues with System Description	05/14	NM

OXY

OCCIDENTAL PERMIAN

LOST TANK 3-5 BATTERY PLOT PLAN

EDDY COUNTY, NM

SIZE	FSCM NO	DWG NO	REV
A3			1

SCALE None SHEET 1 OF 1

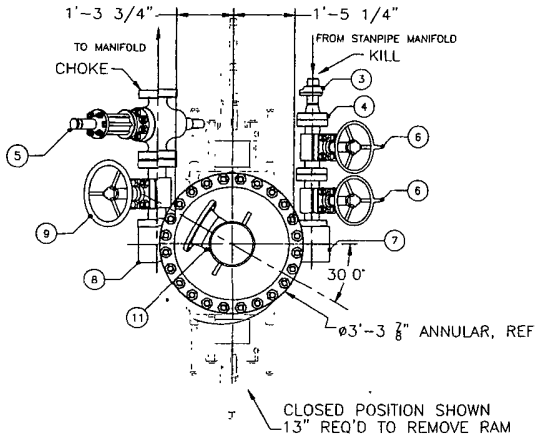

PROPER TORQUE FOR BOLTS

COMPONENT	FLANGE SIZE & RATING	BOLT SIZE	TORQUE (FT/LBS) CF=0 07	TORQUE (FT/LBS) CF=0 13
SPOOLS, ANNULAR & RAMS	11"x5M	1 7/8" DIA	1890	3330
BLOCKS	3 1/8x5M	1 1/8" DIA	401	686
CHOKE VALVES	3 1/8x5M	1 1/8" DIA	401	686
KILL VALVES	2 1/16x5M	7/8" DIA	188	319

BILL OF MATERIAL

ITEM NO.	QUAN	DESCRIPTION	PART NUMBER	WEIGHT
		11-5M BOP ASSEMBLY		
1	1	ANNULAR, 11x3M BOLTED TYPE		6005
2	1	BOP DOUBLE RAM		7600
	4	RAM ELEMENTS		444
3	1	HAMMER UNION, 2-1502# XXH (BW)		5
4	1	FLANGE, WN 2 1/16-5M API		42
5	1	VALVE, GATE FLS-HCR 3 1/8-5M		396
6	2	VALVE, GATE 2 1/16-5M		350
7	1	90° STUDDED BLOCK, 3 1/8-5M X 2 1/16-5M		240
8	1	90° STUDDED BLOCK, 3 1/8-5M X 3 1/8-5M		250
9	2	VALVE, GATE 3 1/8-5M		720
10	1	BELL NIPPLE BOP LIFTING SECTION	MK. F4M-H-318 01A	780
11	1	BELL NIPPLE EXTENSION	MK. F4M-H-319 01A	396
12	1	11"-5M x 11"-5M x 1'-3" LONG SPACER		600
		SPOOL- WORKING PRESSURE 5000 PSI		

HARDWARE

ITEM NO.	QUAN	DESCRIPTION	PART NUMBER	WEIGHT
		RINGS AND BOLTS		400

APPROX TOTAL WEIGHT = 18,228 LBS.

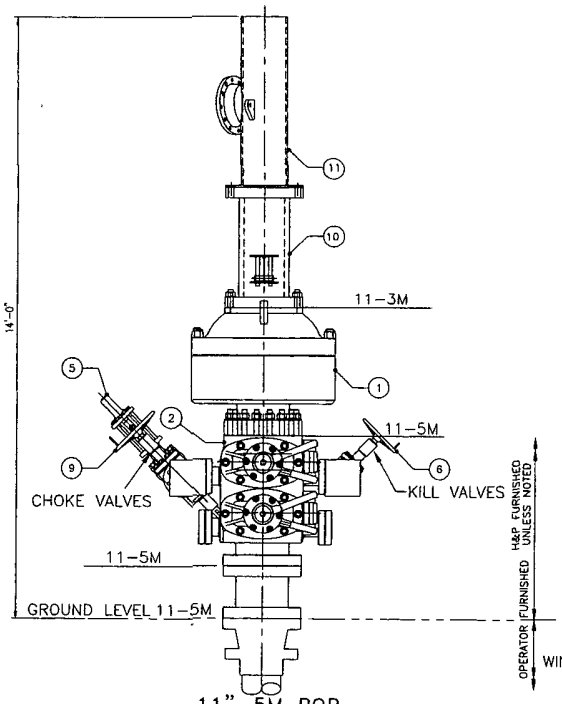

11"-5M BOP
W/ BELL NIPPLE

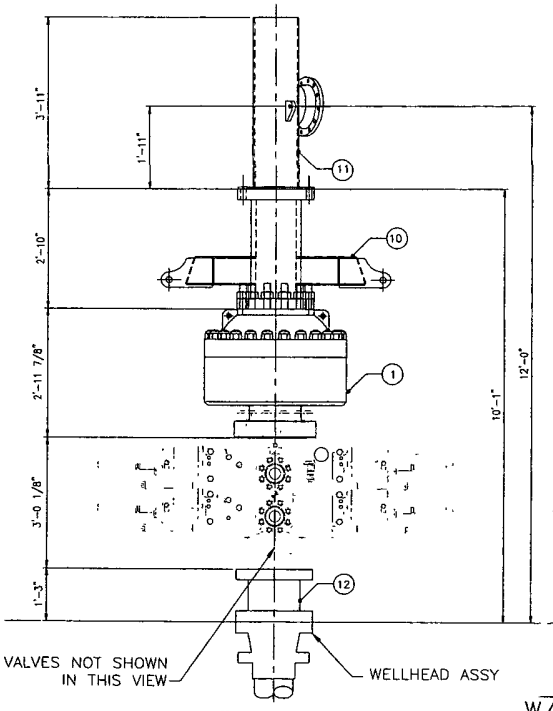

11"-5M BOP
W/ BELL NIPPLE

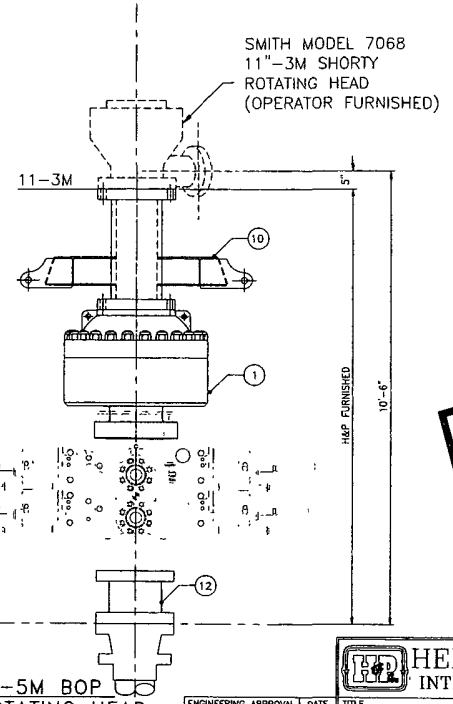

11"-5M BOP
W/ ROTATING HEAD

ISSUED FOR FABRICATION
August-08-2008
DRAFTSMAN
ENGINEER

PROPRIETARY

THIS DRAWING AND THE IDEAS AND INFORMATION INCLUDED IN THIS DRAWING ARE PROPRIETARY AND ARE NOT TO BE REPRODUCED, DISTRIBUTED OR DISCLOSED IN ANY MANNER, WITHOUT THE PRIOR, WRITTEN CONSENT OF A DULY AUTHORIZED OFFICER OF HELMERICH & PAYNE INTL DRILLING CO

NOTES:

1 ALL BOP RAMS SHOWN ARE SHAFFER MODEL LXT
11-5M PSI WP – FLANGED BOTTOM AND STUDDED TOP

			ENGINEERING APPROVAL	DATE
△				
△				
△				
8	08/08/08	ADDED 1 OF 4 SHTS WAS 1 OF 3		DRJ
8	07/29/08	SHEET 1 OF 3 WAS 1 OF 5		DRJ

HELMERICH & PAYNE
INTERNATIONAL DRILLING CO

TITLE
11-5M BOP EQUIPMENT
GENERAL ARRANGEMENT

CUSTOMER OXY-PERMIAN

PROJECT F4M

DRAWN DJOHNSON | DATE 07/14/08 | DWG NO F4M-H-320 | REV B

DIMENSION NOTATION		
DIM "A"	DIM "B"	RIGS THAT APPLY
1'-3"	1'-8"	335 THRU 339
11 1/2"	1'-9 1/2"	340, 344 THRU 347

LEGEND

1. 3 1/8"-5M FLANGED END GATE VALVE
2. 2 1/16"-5M FLANGED END GATE VALVE
3. BLOCK WITH TRANSMITTER FLANGE AND PRESSURE GAUGE
4. 2 1/16"-5M ADJUSTABLE CHOKE
5. TRANSMITTER FLANGE
6. PRESSURE GAUGE
7. DSA 2 1/16"-5M x 3 1/16"-10M
8. 3 1/16"-10M HYDRAULIC CHOKE
9. 3 1/8"-5M x 3 1/16"-10M SPOOL
10. 3 1/8"-5M x 3 1/8"-5M STUDDED TEE
11. 3 1/8"-5M FLANGED END HCR GATE VALVE
12. 2 1/16"-5M x 2 1/16-5M SPOOL

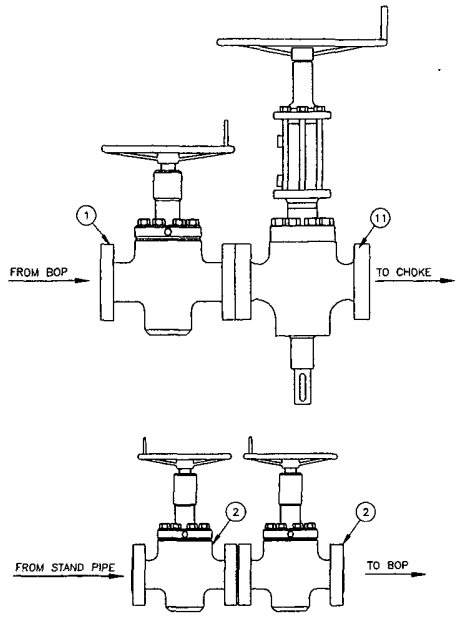

BOP SIDE OUTLET VALVES

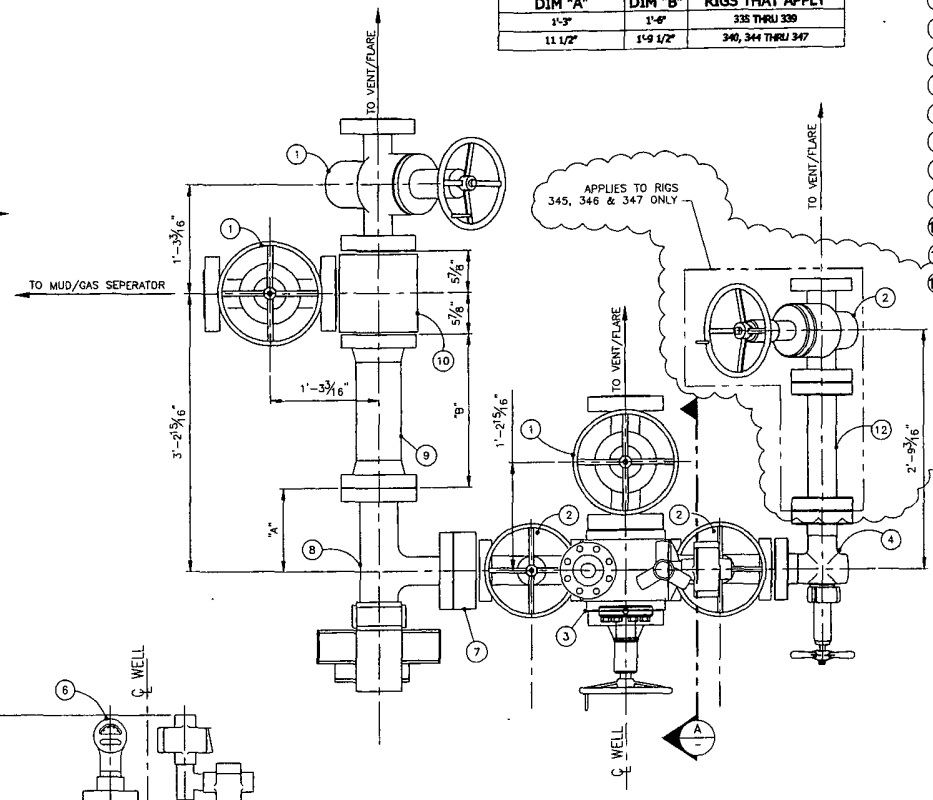

PLAN VIEW
CHOKE MANIFOLD

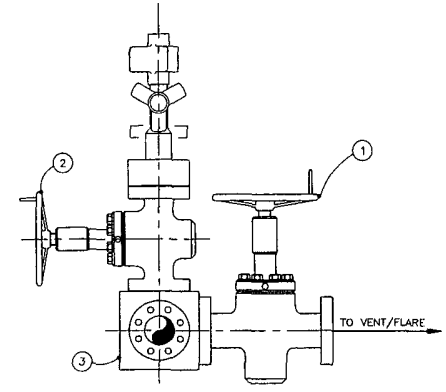

VIEW A-A

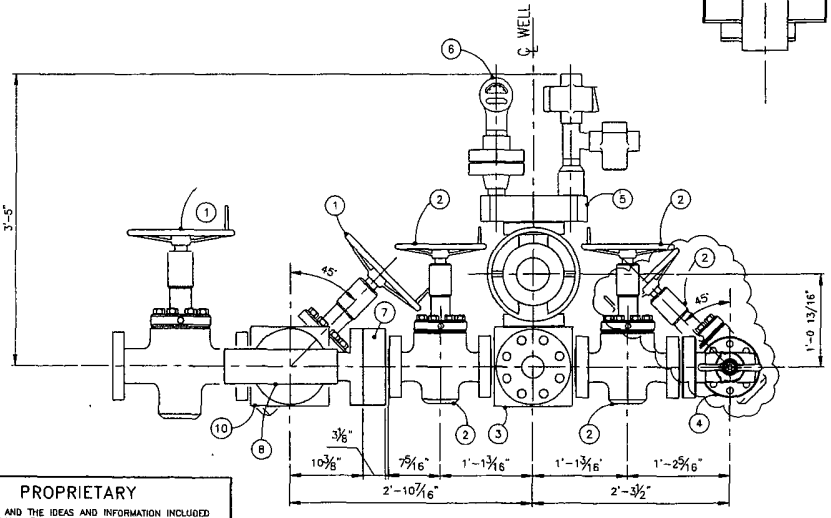

ELEVATION VIEW

ISSUED FOR FABRICATION
October-17-2008
DRAFTSMAN
ENGINEER

			ENGINEERING APPROVAL	DATE
△				
△				
C	10-17-08	ADDED QTY (1) ITEM 2 & ITEM 12	MWL	
B	09-26-08	ADD DIM NOTATION BOX FOR DIFFERENT SIZE HYD CHOKE	MWL	
A	3/3/08	REVISED CONFIGURATION ADDING ITEMS 7 - 10	RDM	

HELMERICH & PAYNE
INTERNATIONAL DRILLING CO

TITLE
CHOKE MANIFOLD
DETAIL ARRANGEMENT

CUSTOMER OXY SOUTH AMERICA
PROJECT F4M
DRAWN JAV | DATE 01/07/08 | DWG NO OX-D0079 | REV C

PROPRIETARY
THIS DRAWING AND THE IDEAS AND INFORMATION INCLUDED IN THIS DRAWING ARE PROPRIETARY AND ARE NOT TO BE REPRODUCED, DISTRIBUTED OR DISCLOSED IN ANY MANNER, WITHOUT THE PRIOR, WRITTEN CONSENT OF A DULY AUTHORIZED OFFICER OF HELMERICH & PAYNE INT'L DRILLING CO

Continental CONTITECH

Fluid Technology

Quality Document

CERTIFICATE OF CONFORMITY

Supplier : CONTITECH RUBBER INDUSTRIAL KFT.
Equipment : 6 pcs. Choke and Kill Hose with installed couplings
Type : 3" x 10,67 m WP: 10000 psi
Supplier File Number : 412638
Date of Shipment : April. 2006
Customer : Phoenix Beattie Co.
Customer P.o. : 002491
Referenced Standards / Codes / Specifications : API Spec 16 C
Serial No.: 52754,52755,52776,52777,52778,52782

STATEMENT OF CONFORMITY

We hereby certify that the above items/equipment supplied by us are in conformity with the terms, conditions and specifications of the above Purchaser Order and that these items/equipment were fabricated inspected and tested in accordance with the referenced standards, codes and specifications and meet the relevant acceptance criteria and design requirements.

COUNTRY OF ORIGIN HUNGARY/EU

Signed : .....

...ntiTech Rubber Industrial Kft. Quality Control Dept. DI

Date: 04. April. 2006

Position: Q.C. Manager

PHOENIX Beattie — **Material Identification Certificate**

PA No. 008330 | Client: HELMERICH & PAYNE INT'L DRILLING | Client Ref: 370-366-001 | Page: 1

Part No	Description	Material Desc	Material Spec	Qty	W/O No	Batch No	Test Cert No	Bin No	Drg No	Issue No
[illegible]	3" 10K HC CK HOSE x 35ft OA			1	[illegible]	[illegible]		[illegible]		
[illegible]	LUTING & SAFETY [illegible] TO			1	[illegible]	[illegible]		[illegible]		
[illegible]	SAFETY CLAMP [illegible] 7.5ST	CARBON STEEL		1	[illegible]	[illegible]		[illegible]		
[illegible]	SAFETY CLAMP [illegible] 7.5ST	CARBON STEEL		1	[illegible]	[illegible]		[illegible]		

We hereby certify that these goods have been inspected by our Quality Management System, and to the best of our knowledge are found to conform to relevant industry standards within the requirements of the purchase order as issued to Phoenix Beattie Corporation.

Continental CONTITECH

Fluid Technology

Quality Document

QUALITY CONTROL INSPECTION AND TEST CERTIFICATE			CERT Nº: 746
PURCHASER: Phoenix Beattie Co.			P.O. Nº: 002491
CONTITECH ORDER Nº: 412636	HOSE TYPE: 3" ID	Choke and Kill Hose	
HOSE SERIAL Nº: 52777	NOMINAL / ACTUAL LENGTH: 10,67 m		
W.P 68,96 MPa 10000 psi	T.P. 103,4 MPa 15000 psi	Duration: 60 – min.	

Pressure test with water at ambient temperature

See attachment. (1 page)

↑ 10 mm = 10 Min.

→ 10 mm = 25 MPa

COUPLINGS

Type	Serial Nº	Quality	Heat Nº
3" coupling with	917 913	AISI 4130	T7998A
4 1/16" Flange end		AISI 4130	26984

INFOCHIP INSTALLED

API Spec 16 C
Temperature rate:"B"

All metal parts are flawless

WE CERTIFY THAT THE ABOVE HOSE HAS BEEN MANUFACTURED IN ACCORDANCE WITH THE TERMS OF THE ORDER AND PRESSURE TESTED AS ABOVE WITH SATISFACTORY RESULT.

Date:	Inspector	Quality Control
04. April. 2008		ContiTech Rubber Industrial Kft. Quality Control Dept. H

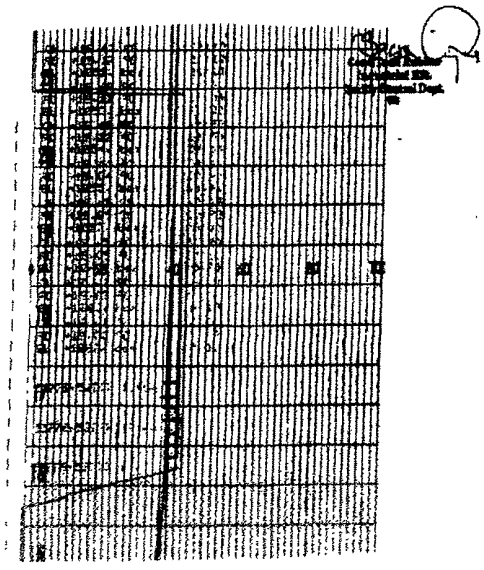

Form No 100/12

PHOENIX Beattie

Phoenix Beattie Corp
[illegible]
Tel: [illegible]
Fax: [illegible]
E-mail [illegible]
www.phoenixbeattie.com

Delivery Note

Customer Order Number	370-369-001	Delivery Note Number	003678	Page	1
Customer / Invoice Address HELMERICH & PAYNE INT'L DRILLING CO 1437 SOUTH BOULDER TULSA, OK 74119		**Delivery / Address** HELMERICH & PAYNE IDC ATTN: JOE STEPHENSON - RIG 370 13609 INDUSTRIAL ROAD HOUSTON, TX 77015			

Customer Acc No	Phoenix Beattie Contract Manager	Phoenix Beattie Reference	Date
H01	JJL	006338	05/23/2008

Item No	Beattie Part Number / Description	Qty Ordered	Qty Sent	Qty To Follow
1	HP10CK3A-35-4F1 3" 10K 16C CAK HOSE x 35ft OAL CW 4.1/16" API SPEC FLANGE E/ End 1: 4.1/16" 10Kpsi API Spec 6A Type 6BX Flange End 2: 4.1/16" 10Kpsi API Spec 6A Type 6BX Flange c/w BX155 Standard ring groove at each end Suitable for H2S Service Working pressure: 10,000psi Test pressure: 15,000psi Standard: API 16C Full specification Armor Guarding: Included Fire Rating: Not Included Temperature rating: -20 Deg C to +100 Deg C	1	1	0
2	SEC3-HPF3 LIFTING & SAFETY EQUIPMENT TO SUIT HP10CK3-35-F1 2 x 160mm ID Safety Clamps 2 x 244mm ID Lifting Collars & element C's 2 x 7ft Stainless Steel wire rope 3/4" OD 4 x 7.75t Shackles	1	1	0
3	SC725-200CS SAFETY CLAMP 200MM 7 25T C/S GALVANISED	1	1	0

Form No 100/12

PHOENIX Beattie

Phoenix Beattie Corp
[illegible]
Tel: [illegible]
Fax: [illegible]
E-mail [illegible]
www.phoenixbeattie.com

Delivery Note

Customer Order Number	370-369-001	Delivery Note Number	003678	Page	2
Customer / Invoice Address HELMERICH & PAYNE INT'L DRILLING CO 1437 SOUTH BOULDER TULSA, OK 74119		**Delivery / Address** HELMERICH & PAYNE IDC ATTN: JOE STEPHENSON - RIG 370 13609 INDUSTRIAL ROAD HOUSTON, TX 77015			

Customer Acc No	Phoenix Beattie Contract Manager	Phoenix Beattie Reference	Date
H01	JJL	006338	05/23/2008

Item No	Beattie Part Number / Description	Qty Ordered	Qty Sent	Qty To Follow
4	SC725-132CS SAFETY CLAMP 132MM 7 25T C/S GALVANIZED C/W BOLTS	1	1	0
5	00CERT-HYDRO HYDROSTATIC PRESSURE TEST CERTIFICATE	1	1	0
6	00CERT-LOAD LOAD TEST CERTIFICATES	1	1	0
7	00FREIGHT INBOUND / OUTBOUND FREIGHT PRE-PAY & ADD TO FINAL INVOICE NOTE: MATERIAL MUST BE ACCOMPANIED BY PAPERWORK INCLUDING THE PURCHASE ORDER, RIG NUMBER TO ENSURE PROPER PAYMENT	1	1	0

Phoenix Beattie Inspection Signature :

Received in Good Condition : Signature

Print Name

Date

All goods remain the property of Phoenix Beattie until paid for in full. Any damage or shortage on this delivery must be advised within 5 days. Returns may be subject to a handling charge.

OXY Permian

EMERGENCY ACTION PLAN

Potash Area
Federal 23 #7,8,10,11,12,13,14,15
Federal 29 #9, 10, 11, 12
Lost Tank 3 Federal #13, 15, 19

DRILLING/WORKOVER

DRILLING AND CRITICAL WELL OPERATIONS

DRILLING/WORKOVER
DRILLING AND CRITICAL WELL OPERATIONS

EMERGENCY ACTION PLAN

TABLE OF CONTENTS

ITEM	PAGE
PREFACE	3
EMERGENCY RESPONSE ACTIVATION AND GENERAL RESPONSIBILITIES	4
SPECIFIC EMERGENCY GUIDANCE	
- Well Control	5
- H2S Release	6
- Personal Injury or Death	7
- Fire or Explosion	7
- Spills	7
- Hydrocarbon Vapor Cloud Release	7
- Bomb Threat	8
- Natural Disasters – Tornadoes and Thunderstorms	9
PUBLIC RELATIONS	9
PHONE CONTACTS – OP DRILLING/WORKOVER	10
PHONE CONTACTS – OP PRODUCTION AND PLANT PERSONNEL	11
PHONE CONTACTS – OP HES PERSONNEL	13
MAP	22

PREFACE

An effective and viable Emergency Action Plan (EAP) is intended to provide prior planning and guidance in responding to emergency incidents. The primary considerations in its development are protection of personnel, the public, company and public property, and the environment.

Although the plan addresses varied emergency situations that may occur, it recognizes that flexibility and the use of the organization's knowledge and experience is critical to safe resolution of emergency incidents. Response actions outlined in the plan provide a framework, which may be placed into operation without confusion. These actions should promote quick and decisive actions during the critical initial period and immediately following an emergency. As the response progresses, additional guidelines and procedures may need to be implemented as the situation dictates. In addition, all emergency incidents must be properly reported per the Oxy Incident Reporting and Notification Policy, state and federal requirements, etc.

The following procedures are provided as Oxy Permian's minimum expectations. The Contractor's own procedures may be utilized in lieu of Oxy Permian's, provided that it meets or exceeds the minimum deliverables. It should be understood that this list is not all-inclusive, but the overall plan should assist in lateral application to similar incidents.

This EAP is intended for use on Oxy Drilling/Workover projects and the operations within their area of responsibility, such as drilling, critical well work, etc.

EMERGENCY RESPONSE ACTIVATION AND GENERAL RESPONSIBILITIES

Activation of the Emergency Action Plan

A. In the event of any emergency situation, all personnel on location should first ensure that the following items are initiated. After that, they should refer to the appropriate Specific Emergency Guidance sections on pages five (5) through nine (9) in this document for further responsibilities:

1. Notify the senior ranking contract representative on site.
2. Notify Oxy representative in charge.
3. Notify civil authorities if the Oxy Representative cannot be contacted and the situation dictates.
4. Perform rescue and first aid as required (without jeopardizing additional personnel).

General Responsibilities

Oxy Permian Personnel:

A. Drill Site Manager: The Oxy Drilling/Critical Well Servicing Operations Specialist or contract personnel serving in that capacity will serve as Operations Chief Officer for all emergency incidents. The Operations Chief Officer is responsible for:

1. Notification to the Drilling/Workover Team Leader of the incident occurrence.
2. Notification to the local RMT/PMT leader of the incident occurrence, and the need for the designated local RMT/PMT Incident Commander to act in that capacity for the response effort.
3. Sole control of all tactical activities directed toward reducing the immediate hazard, establishing situational control and restoring the operations to a non-emergency state.

B. Local RMT/PMT Designated Incident Commander: The Oxy local RMT/PMT Designated Incident Commander will serve as the overall Incident Commander for the drilling or critical well servicing emergency incident. The Incident Commander is responsible for:

1. Coordinating with the Drilling Manager for notification to the Oxy Crisis Management team of the incident occurrence.
2. Establishing and managing the overall incident command structure and response from inception through restoration of normal activities in the area.

C. Drilling/Workover HES Tech: The Drilling/Workover HES Tech (or his designate) is responsible for reporting to the incident as soon as reasonably possible, to provide support to the response effort as required by the Operations Chief Officer or the Incident Commander.

Contract Drilling Personnel will immediately report to their assigned stations and perform their duties as outlined in the appropriate Specific Emergency Guidance sections on pages five (5) through nine (9) in this document.

Other Contractor Personnel will report to the safe briefing area to assist Oxy personnel and civil authorities as requested when it is safe to do so and if they have been adequately trained in their assigned duties.

Civil Authorities (Law Enforcement, Fire, and EMS) will be responsible for:

1. Establishing membership in the Unified Incident Command.
2. As directed by the Incident Commander and the Unified Command, control site access, re-route traffic, and provide escort services for response personnel.
3. Perform all fire control activities in coordination with the Unified Command.
4. Initiate public evacuation plans as instructed by the Incident Commander.
5. Perform rescue or recovery activities with coordination from the Unified Command.
6. Provide medical assistance as dictated by the situation at hand.

WELL CONTROL

The following procedures will be implemented when a loss of primary control is indicated. Indicators of loss of primary control are flow from the well, an increase in pit volume, or when the drilling fluid used to fill the hole on trips is less than the calculated pipe displacement volume. The emergency signal for well control procedures will be a single long blast of the rig air horn.

Kick While Drilling - Procedures And Responsibilities

Driller:

1. Stop the rotary and hoist the kelly above the rotary table.
2. Stop the mud pump(s).
3. Check for flow.
4. If flowing, sound the alarm immediately.
5. Ensure that all crew members fill their responsibilities to secure the well.
6. Record drill pipe and casing shut-in pressures and pit volume increase and begin kill sheet.

Derrickman:

1. Go to BOP/choke manifold area.
2. Open choke line valve on BOP.
3. Signal to Floorman #1 that the choke line is open.
4. Close chokes after annular or pipe rams are closed.
5. Record shut-in casing pressure and pit volume increase.
6. Report readings and observations to Driller.
7. Verify actual mud weight in suction pit and report to Driller.
8. Be readily available as required for additional tasks.

Floorman # 1:

1. Go to accumulator control station and await signal from Derrickman.
2. Close annular preventer and HCR on signal (if available, if not then close pipe rams).
3. Record accumulator pressures and check for leaks in the BOP or accumulator system.
4. Report to Driller, and be readily available as required for additional tasks.

Floorman # 2:

1. Start water on motor exhausts.
2. Notify Contractor Tool Pusher or Rig Manager of well control situation.
3. Check location for ignition sources and extinguish or turn off, and stop any welding in progress.
4. Report to Driller, and be readily available as required for additional tasks.

Floorman # 3:

1. Stand-by with Driller, and be readily available as required for additional tasks.

Tool Pusher/Rig Manager:

1. Notify Oxy Representative and report to rig floor.
2. Review and verify all pertinent information.
3. Communicate information to Oxy Representative, and confer on an action plan.
4. Finalize well control worksheets, calculations and preparatory work for action plan.
5. Initiate and ensure the action plan is carried out.
6. Communicate any changes in well or site conditions, or any indications that the action plan needs to be revised to the Oxy representative.

Oxy Representative:

1. Notify Drilling Superintendent or Drilling Manager and RMT Leader or Local Incident Commander, and Police, Fire Department, or other local emergency services as required.

Kick While Tripping - Procedures and Responsibilities

Driller:

1. Sound the alarm immediately when pipe displacement volume is less than 75% of calculated.
2. Position the upper tool joint just above rotary table and set slips.
3. Check for flow.
4. Ensure that all crew members fill their responsibilities to secure the well.
5. Record drill pipe and casing shut-in pressures and pit volume increase, and begin kill sheets.

Derrickman: (same as while drilling)

Floor Man # 1:

1. Install full opening valve (with help from Floorman #2) in top drill string connection.
2. Tighten valve with make up tongs.
3. Go to accumulator control station and await signal from Derrickman.
4. Close annular preventer and HCR valve on signal (if available, if not then close pipe rams).
5. Record accumulator pressures and check for leaks in the BOP and accumulator system.
6. Report to Driller, and be readily available as required for additional tasks.

Floor Man # 2:

1. Assist installing full opening valve in drill string.
2. Position back-up tongs for valve make-up.
3. Start water on motor exhausts.
4. Notify Contractor Tool Pusher or Rig Manager of well control situation.
5. Check location for ignition sources and extinguish or turn off, and stop any welding in progress.
6. Report to Driller, and be readily available as required for additional tasks.

Floorman # 3, Rig Manager/Tool Pusher, and Oxy Representative: (same as while drilling)

H2S RELEASE

The following procedures and responsibilities will be implemented on activation of the H2S siren and lights.

All Personnel:

1. On alarm, don escape unit (if available) and report to upwind briefing area.

Rig Manager/Tool Pusher:

1. Check that all personnel are accounted for and their condition.
2. Administer or arrange for first aid treatment, and /or call EMTs as needed.
3. Identify two people best suited to secure well and perform rescue, and instruct them to don SCBA.
4. Notify Contractor management and Oxy Representative.
5. Remain at the briefing area, assess and monitor personnel and overall situation for hazards or conditions that might warrant a change in the action plan.

Two People Responsible For Shut-in and Rescue:

1. Don SCBA and acquire tools to secure well and perform rescue, i.e., wrenches, retrieval ropes, etc.
2. Utilize the buddy system to secure well and perform rescue(s).
3. Return to the briefing area and stand by for further instructions.

All Other Personnel:

1. Remain at the briefing area and await further instructions - do not leave unless instructed.

Oxy Representative:

1. Remain at the briefing area, assess and monitor personnel and overall situation for hazards or conditions that might warrant a change in the action plan.
2. Notify Drilling Superintendent or Drilling Manager and RMT Leader or Local Incident Commander, and Police, Fire Department, or other local emergency services as required.

PERSONAL INJURY OR DEATH

Call for assistance, and then administer first aid for the injured. Treatment should be prioritized by life-threatening conditions.

A. Do not move injured personnel unless they are in imminent danger. An ambulance should be summoned for any injury that appears to be serious.

FIRE OR EXPLOSION

Fire Fighting Philosophy

It is Oxy Permian's intent that Oxy and contract personnel will only extinguish incipient or beginning stage fires and perform or assist in initial non-threatening rescue operations. The responding fire department will be given primacy when they arrive to control a fire on any Oxy property. Any Oxy or contract employee who participates in a fire response must be fully trained and qualified as such, and must be utilizing appropriate Personal Protective Equipment.

Contract and Oxy Personnel Deployment

In the event of a fire or explosion all personnel will report to the safe briefing area. The Senior Contract Representative on site will designate personnel for rescue as appropriate depending on their qualifications and the risks of the rescue. Any rescue which involves significant risk to those performing the rescue should be deferred to professional response personnel.

No personnel will leave the area without direction / permission from the Senior Contract Representative on-site.

The Senior Contract Representative on site will notify local emergency response personnel as required, along with the Contract Company management and the Oxy Representative as soon as reasonably possible.

SPILLS

In the event of a significant spill of any substance, the person discovering it should immediately notify the rig supervisor and the Oxy Representative. Personnel onsite should **NOT** attempt identification, control or containment unless they are absolutely sure of the product spilled, are fully aware of the hazard characteristics, and are equipped with the appropriate personal protective equipment.

HYDROCARBON VAPOR CLOUD RELEASE

Upon discovery of a Hydrocarbon Vapor Cloud (NGL) release, take immediate safety precautions to protect any company personnel or others that might be in the area. Other emergency actions should be initiated only by trained expert personnel from the appropriate pipeline company.

The following guidelines should be followed:

1. Immediately notify the rig supervisor and the Oxy Representative.
2. Determine wind direction, and evacuate upwind or at 90 degrees to the release.
3. Maintain a safe distance from the cloud.
4. Render first aid and call for an ambulance as necessary.
5. Attempt to warn approaching individuals of the hazard.

BOMB THREAT

In the event of a bomb threat, the person receiving the call, on or off site, should try to get as much information as possible from the caller. The person receiving the call should immediately contact the supervisor in charge. Evacuation of the field should be considered at this time. Roadblocks may need to be installed. The supervisor in charge should make all appropriate contacts.

The Supervisor contacted should:

a. Realize that every bomb threat is serious.

b. Notify Corporate Security

c. Inform Police/Sheriff's Department and Fire Department

d. Contact RMT Leader or his designated relief to coordinate search efforts with the assistance of the local law enforcement agencies.

BOMB THREAT CHECKLIST

Date_____ Name of person taking call_____ Phone # call came on _____

FILL OUT COMPLETELY IMMEDIATELY AFTER BOMB THREAT

1. When is the bomb set to explode?_____
2. Where is the bomb located?_____
3. What does the bomb look like?_____
4. What type of bomb is it?_____
5. What will cause the bomb to explode?_____
6. Did the caller place the bomb?_____
7. Why did the caller place the bomb?_____
8. What is the caller's name and address?_____

Callers: Sex___ Age___Race___Length of call_____

DESCRIPTION OF CALLER'S VOICE (Check all that apply)

___Calm	___Rapid	___Laughing	___Lisp	___Disguised
___Angry	___Crying	___Raspy	___Accent	___Familiar? Who did it sound like?
___Excited	___Normal	___Deep	___Stutter	
___Slow	___Distinct	___Ragged	___Deep	___Deep Breathing
___Loud	___Slurred	___Nasal	___Clearing Throat	

BACKGROUND SOUNDS:

___Street Noises	___House Noises	___Factory	___Music	___Local Call
		___Machinery	___Static	___Long Distance
___Voices	___Motor	___Animals	___PA System	___Phone Booth
___Office	___Clear	___Other		

THREAT LANGUAGE:

___Well-Spoken ___Foul ___Incoherent ___Irrational ___Taped
___Message Read by Threat Maker

REMARKS:

NATURAL DISASTERS

Tornadoes

These general procedures should be followed by everyone seeking shelter from a severe storm or tornado:

Indoors:

1. Protect yourself from flying glass and debris.
2. Take refuge near the core of the building for maximum protection.
3. Do not smoke while taking shelter.
4. Shut all doors to offices, if time permits.

In the field:

1. Seek cover in a low-lying area, such as a culvert, ditch, pit, or water injection valve box.
2. Get out of and away from your vehicle.
3. Stay away from power lines.
4. Cover your head with your arms and clothing.

Thunderstorms

Indoors:

1. Avoid water pipes, sinks, showers, tubs, etc.
2. Stay away from doors and windows.
3. Do not use the telephone.
4. Take off head sets.
5. Turn off, unplug, and stay away from appliances, computers, power tools, & TV sets.

In the field:

1. Avoid water.
2. Avoid high ground and open spaces.
3. Avoid all metal objects including electric wires, fences, machinery, motors, power tools, etc. Unsafe places include underneath canopies, small picnic or rain shelters, or near trees. Where possible, find shelter in a substantial building or in a fully enclosed metal vehicle such as a car, truck or a van with the windows completely shut. If lightning is striking nearby when you are outside, you should:
    a. Crouch down, feet together, hands over ears
    b. Avoid proximity (minimum of 15 ft.) to other people.
4. SUSPEND ACTIVITIES for 30 minutes after the last observed lightning or thunder.

PUBLIC RELATIONS

Oxy recognizes that the news media have a legitimate interest in incidents at Oxy facilities that could affect the public. It is to the company's benefit to cooperate with the news media when incidents occur because these media are our best liaison with the public.

Our objective is to see that all reports of any emergency are factual and represent the company's position fairly and accurately. Cooperation with news media representatives is the most reliable guarantee that this objective will be met.

All contract and Oxy employees are instructed **NOT** to make any statement to the media concerning the emergency incident. If a media representative contacts any employee, they should refer them to the designated Emergency Command Center where they should contact the Incident Commander or his designated relief for any information concerning the incident.

Drilling Dept. Emergency Contact list

Drilling Manager	Scott Cooper	713-366-5325 office 281-352-5865 cell
Drilling Superintendent	Nelson Emery	713-215-7357 office 281-467-2862 cell
Drilling Eng. Supervisor	Richard Jackson	713-215-7235 office 281-467-6383 cell
HES Specialist-Drilling	Brian Bielss	432-685-5719 office 432-813-6335 cell
Drilling Coordinator	Drue Dunaway	432-685-5715 office 432-556-3288 cell
Drilling Coordinator	Kevin Videtich	806-592-6213 office 806-891-2000 cell

OXY Permian Incident Reporting Phone List

OXY Permian Crisis Team Hotline Notification (713) 935-7210

Person	Location	Office Phone	Cell/Mobile Phone
Asset Management-Operations Areas			
OXY Permian President & General Manager: Ken Dillon	Houston	(713) 366-5140	(661) 333-9315
Operations Support Manager: Rick Callahan	Houston	(713)-215-7578	(281) 389-1141
Asset Development Manager-Jeff Simmons	Houston	(713) 366-5124	(713) 560-8073
Public Affairs: Stacey Crews	Houston	(713) 366-5304	(713) 416-8381
Operations South-Frontier			
RMT Lead Frontier-Barry Beresik	Houston	(713) 366-5016	(713) 560-8061
RMT Lead South-Keith Brown	Houston	(713) 366-5354	(713) 264-1114
Surface Operations Team Lead-Bill Elliott	Midland	(432) 685-5845	(432) 557-6736
Well Operations Team Lead-Leamon Hood	Midland	(432) 685-5794	(432) 634-4486
Well Servicing Team Lead-Vicki Hollub	Houston	(713) 215-7332	(713) 885-6347
WST Coord Frontier-Kirk Hobbs	Midland	(432) 685-5951	(432) 634-3890
WST Coord South-Robert Ricks	Midland	(432) 685-5821	(432) 634-8791
NM Frontier Oper Coord -Larry Sammons	Carlsbad	(575) 887-8337	(575) 390-8397
NM-South Oper Coord-Gilbert Williams	Seminole	(432) 385-2778	(806) 215-0009
NM Frontier Oper Coord -Van Barton	Carlsbad	(575) 887-8337	
Completion Specialist-Dale Redding	Hobbs	(432) 385-3206	
HES Staff & Areas of First Contact Support			
HES Manager: John Kirby	Houston	(713) 366-5460	(281) 974-9523
Environmental Engineer, Air: Peggy Waisanen	Midland	(432) 685-5673	(432) 894-1968
Administrative Assistant: Judy Browning	Midland	(432) 685 5692	(432) 661 1048
Environmental Consultant: Dennis Newman	Houston	(713) 366-5485	(713) 560-8060
Safety Engineer: Derek Purvis	Houston	(713) 366-5932	(713) 582-1848
Pipeline Safety: Don Bales	Midland	(432) 685-5844	(432) 894-1960
HES Lead-Pete Maciula	Midland	(432) 685-5667	(432) 557-2450
HES Specialist: Eddie Gonzales	Midland	(432) 685-5929	(432) 556-6790
HES Specialist-Drilling: Robert Lovelady	Midland	(432) 685-5630	(432) 813-6332
HES Tech & Area of Responsibility			
Wasson San Andres RMT: Mark Andersen	Denver City	(806) 592-6299	(806) 215-0077
Hobbs RMT: Steve Bishop	Hobbs	(575) 397-8251	(575) 390-4784
Frontier-New Mexico: Rick Kerby	Carlsbad	(575) 887-8337	(575) 631-4972
South-New Mexico-CJ Summers	Hobbs	(575) 397-8236	(575) 390-9228
Regulatory Affairs			
Lead-Liz Bush-Ivie	Houston	(713) 366-5303	832-474-3701

Regulatory Analyst-David Stewart	Midland	(432) 685-5717	
Regulatory Analyst-Elizabeth Casbeer	Midland	(432) 685-5755	
Regulatory Analyst-Mark Stephens	Houston	(713) 366-5158	

DOT-Pipeline Response Numbers

N. Hobbs Unit: Steve Bishop	Hobbs	(575) 397-8251	(575) 390-4784
Wasson PMT: Todd King	Denver City	(806) 592-6274	(806) 215-0183
Bravo/Slaughter PMT: Gary Polk	Levelland	(806) 229-9708	(806) 638-2425
Cogdell RMT: Dean Peevy	Cogdell	(325) 573-7272	(325) 207-3367
Sharon Ridge: Carl Morales	Sharon Ridge	(325) 573-6341	(325) 207-3374
All DOT Pipeline Support: Donald Bales	Midland	(432) 685-5844	(432) 894-1960

OOGC HES Contacts

Manager HES: Wes Scott	OOGC – Houston	(713) 215-7171	(713) 203-4050
Worldwide Safety Mgr: Greg Hardin alternate	OOGC – Houston	(713) 366-5324	(713) 560-8037
Worldwide Environ. Mgr: Ravi Ravishankar	OOGC – Houston	(713) 366-5039	(832) 863-2240

OOGC Risk Management

Jim Garrett	Los Angeles	(310) 443-6588	(310) 710-3233
Greg LaSalle, alternate	Los Angeles	(310) 443-6542	(310) 710-2255

OSI

Workers Comp. Claim Manager: Steve Jones	Dallas	(972) 404-3542	
Workers Comp. Claims: Mark Ryan	Dallas	(972) 404-3974	
Auto Claims: Steve Jones	Dallas	(972) 404-3542	

Gallagher Bassett

Workers Comp. & Property Damage Claims- OXY Permian Ltd.: Danny Ross		(972) 728-3600 X252	(800) 349-8492

Axiom Medical Consulting

Medical Case Management		(877) 502-9466	

OXY Permian Legal

Tom Janiszewski	Houston	(713) 366-5529	(713) 560-8049

Human Resources

H.R. Manager: Barbara Bernhard	Houston	(713) 215-7150	(713) 702-7949
H.R. Consultant: Amy Thompson	Houston	(713) 215-7863	(281) 799-7348
H.R. Consultant: Laura Matthews	Houston	(713) 366-5137	(713) 569-0386
H.R. Consultant: Jill Williams	Midland	(432) 685-5818	(432) 661-4581

Corporate Security

Frank Zapalac	Houston	(713) 215-7157	(713) 829-5753
Hugh Moreno, alternate	Houston	(713) 215-7162	(713) 817-3322

Regulatory Agencies

Bureau of Land Management	Carlsbad, NM	(575) 887-6544	
Bureau of Land Management	Hobbs, NM	(575) 393-3612	
Bureau of Land Management	Roswell, NM	(575) 393-3612	
Bureau of Land Management	Santa Fe, NM	(505) 988-6030	
DOT Juisdictional Pipelines-Incident Reporting New Mexico Public Regulation Commission	Santa Fe, NM	(505) 827-3549 (505) 490-2375	
DOT Juisdictional Pipelines-Incident Reporting Texas Railroad Commission	Austin, TX	(512) 463-6788	
EPA Hot Line	Dallas, Texas	(214) 665-6444	
Federal OSHA, Area Office	Lubbock, Texas	(806) 472-7681	
National Response Center	Washington, D. C.	(800) 424-8802	
National Infrastructure Coordinator Center		(202) 282-9201	
New Mexico Air Quality Bureau	Santa Fe, NM	(505) 827-1494	
New Mexico Oil Conservation Division	Artesia, NM	(575) 748-1283	
New Mexico Oil Conservation Division	Hobbs, NM	(575) 393-6161	
New Mexico Oil Conservation Division	Santa Fe, NM	(505) 471-1068	
New Mexico OCD Environmental Bureau	Santa Fe, NM	(505) 827-7152 (505) 476-3470	
New Mexico Environmental Department	Hobbs, NM	(575) 827-9329	
NM State Emergency Response Center	Santa Fe, NM	(505) 827-9222	
Railroad Commission of TX	District 8, 8A Midland, TX	(432) 684-5581	
Texas Emergency Response Center	Austin, TX	(512) 463-7727	
TCEQ Air	Region 2 Lubbock, TX	(806) 796-3494	
TCEQ Water/Waste/Air	Region 7 Midland, TX	(432) 570-1359	

Medical Facilities

Artesia General Hospital	Artesia, NM	(575) 748-3333	
Guadalupe Medical Center	Carlsbad, NM	(575) 887-6633	
Lea Regional Hospital	Hobbs, NM	(575) 492-5000	
Medical Arts Hospital	Lamesa, TX	(806) 872-2183	
Medical Center Hospital	Odessa, TX	(432) 640-4000	
Memorial Hospital	Seminole, TX	(432) 758-5811	
Midland Memorial Hospital	Midland, TX	(432) 685-1111	
Nor-Lea General Hospital	Lovington, NM	(575) 396-6611	
Odessa Regional Hospital	Odessa, TX	(432) 334-8200	
St. Mary's Hospital	Lubbock, TX	(806) 796-6000	
Union County General Hospital	Clayton, NM	(575) 374-2585	
University Medical Center	Lubbock, TX	(806) 743-3111	

Local Emergency Planning Comm.

Richard H. Dolgener	Andrews County, TX	(432) 524-1401	
Joel Arnwine	Eddy County, NM	(575) 887-9511	
County Judge Judy House	Gaines County, TX	(432) 758-5411	
Myra Sande	Harding County, NM	(575) 673-2231	
Jerry Reynolds	Lea County, NM	(575) 396-8600	(575) 399-2376

Royce Creager	Loving County, TX	(432) 377-2231	
Mike Cherry	Quay County, NM	(575) 461-2476	
Della Wetsel	Union County, NM	(575) 374-8896	
Bonnie Leck	Winkler County, TX	(432) 586-6658	
Carl Whitaker	Yoakum County, TX	(806) 456-7491	

Law Enforcement - Sheriff

Andrews Cty Sheriff's Department	Andrews County	(432) 523-5545	
Eddy Cty Sheriff's Department	Eddy County (Artesia)	(575) 746-2704	
Eddy Cty Sheriff's Department	Eddy County (Carlsbad)	(575) 887-7551	
Gaines Cty Sheriff's Department	Gaines County (Seminole)	(432) 758-9871	
Lea Cty Sheriff's Department	Lea County (Eunice)	(575) 384-2020	
Lea Cty Sheriff's Department	Lea County (Hobbs)	(575) 393-2515	
Lea Cty Sheriff's Department	Lea County (Lovington)	(575) 396-3611	
Union Cty Sheriff's Department	Union County (Clayton)	(505) 374-2583	
Yoakum City Sheriff's Department	Yoakum Co.	(806) 456-2377	

Law Enforcement - Police

Andrews City Police	Andrews, TX	(432) 523-5675	
Artesia City Police	Artesia, NM	(575) 746-2704	
Carlsbad City Police	Carlsbad, NM	(575) 885-2111	
Clayton City Police	Clayton, NM	(575) 374-2504	
Denver City Police	Denver City, TX	(806) 592-3516	
Eunice City Police	Eunice, NM	(575) 394-2112	
Hobbs City Police	Hobbs, NM	(575) 397-9265 (575) 393-2677	
Jal City Police	Jal, NM	(575) 395-2501	
Lovington City Police	Lovington, NM	(575) 396-2811	
Seminole City Police	Seminole, TX	(432) 758-9871	

Law Enforcement - FBI

FBI	Alburqueque, NM	(505) 224-2000	
FBI	Midland, TX	(432) 570-0255	

Law Enforcement - DPS

NM State Police	Artesia, NM	(575) 746-2704	
NM State Police	Carlsbad, NM	(575) 885-3137	
NM State Police	Eunice, NM	(575) 392-5588	
NM State Police	Hobbs, NM	(575) 392-5588	
NM State Police	Clayton, NM	(575) 374-2473; 911	
TX Dept of Public Safety	Andrews, TX	(432) 524-1443	
TX Dept of Public Safety	Seminole, TX	(432) 758-4041	
TX Dept of Public Safety	Yoakum County TX	(806) 456-2377	

Firefighting & Rescue

Amistad/Rosebud	Amistad/Rosebud, NM	(505) 633-9113	

Andrews	Andrews, TX	(432) 523-4820 (432) 523-3111	
Artesia	Artesia, NM	(575) 746-5051	
Carlsbad	Carlsbad, NM	(575) 885-3125	
Clayton	Clayton, NM	(575) 374-2435	
Denver City	Denver City, TX	(806) 592-5426	
Eunice	Eunice, NM	(575) 394-2111	
Hobbs	Hobbs, NM	(575) 397-9308	
Jal	Jal, NM	(575) 395-2221	
Kermit	Kermit, TX	(432) 586-3468	
Lovington	Lovington, NM	(575) 396-2359	
Maljamar	Maljamar, NM	(575) 676-4100	
Monahans	Monahans, TX	(432) 943-4343	
Nara Visa	Nara Visa, NM	(575) 461-3300	
Pecos	Pecos, TX	(432) 445-2421	
Seminole	Seminole, TX	(432) 758-3676 (432) 758-9871	

Ambulance

Amistad/Rosebud	Amistad/Rosebud, NM	(575) 633-9113	
Andrews Ambulance	Andrews, TX	(432) 523-5675	
Artesia Ambulance	Artesia, NM	(575) 746-2701	
Carlsbad Ambulance	Carlsbad, NM	(575) 885-2111; 911	
Clayton, NM	Clayton, NM	(575) 374-2501	
Denver City Ambulance	Denver City, TX	(806) 592-3516	
Eunice Ambulance	Eunice, NM	(575) 394-3258	
Hobbs, NM	Hobbs, NM	(575) 397-9308	
Jal, NM	Jal, NM	(575) 395-2501	
Lovington Ambulance	Lovington, NM	(575) 396-2811	
Nara Visa, NM	Nara Visa, NM	(575) 461-3300	
Pecos Ambulance	Pecos, TX	(432) 445-4444	
Seminole Ambulance	Seminole, TX	(432) 758-8816 (432) 758-9871	

Medical Air Ambulance Service

AEROCARE - Methodist Hospital	Lubbock, TX	(800) 627-2376	
San Angelo Med-Vac Air Ambulance	San Angelo, TX	(800) 277-4354	
Southwest Air Ambulance Service	Stanford, TX	(800) 242-6199	
Southwest MediVac	Snyder, TX	(800) 242-6199	
Southwest MediVac	Hobbs, NM	(800) 242-6199	
Odessa Care Star	Odessa, TX	(888) 624-3571	
NWTH Medivac	Amarillo, TX	(800) 692-1331	

BILL OF MATERIAL				
ITEM	QTY.	DESCRIPTION	LENGTH	WEIGHT

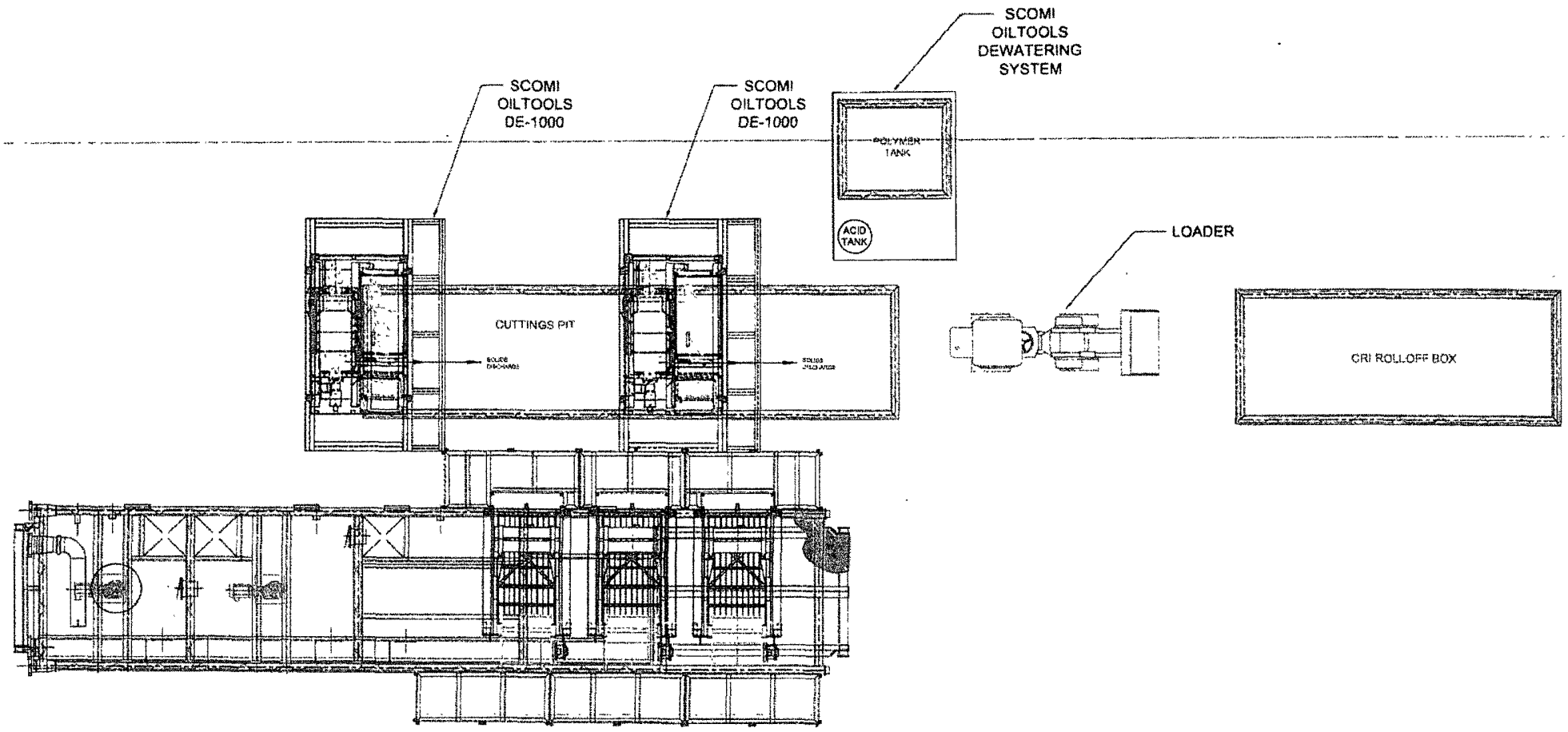

NO.	REVISIONS	BY	CHK'D	APP'D	DATE

1. ALL STRUCTURAL MATERIAL SHALL BE ASTM - A36.
2. ALL PIPE SCH. 40 MATERIAL SA 106 Gr. B
3. ALL FLANGES SHALL BE 300#, 150# & MATERIAL SA 105.
4. ALL FITTINGS SCH. 40 MATERIA. SHALL BE SA 234 Gr. WPB.
5. TANK FABRICATION SHALL BE IN ACCORDANCE WITH API-650.

The designs, information and disclosures on this drawing or copies are the exclusive confidential property of Scomi International Limited and are not to be reproduced or disclosed to others by any means, in any format, or transmitted, or translated into a machine language or used for manufacture or other purpose without the written permission of Scomi International Limited, in receipt of such permission, safely and directly for the purposes consented. This drawing and any copies shall be returned to Scomi International Limited upon request.

TITLE:

CLOSED LOOP SYSTEM
BASIC LAYOUT
OXY - H&P - FLEX 4 M

DRAWN BY	DATE	CHECKED BY	DATE
PDL	3/30/09		
APPROVED	DATE	SCALE	SIZE
		NTS	D

Scomi
521 N. Sam Houston Parkway East, Suite 200,
Houston, Texas 77060
PHONE: (281)-590-8815, FAX: (281)-590-2900

JOB NO.

DRAWING NO. 521S-027

REV.

SURFACE USE PLAN OF OPERATIONS

Operator Name	**OXY USA Inc.**	**16696**	
Lease Name/Number	**Lost Tank 3 Federal #19**	**304875**	**Federal Lease No. NMNM0417696**
Pool Name/Number:	**Lost Tank Delaware, West**	**96582**	
Surface Location:	**2558 FNL 185 FWL SWNW(E)**		**Sec 3 T22S R31E**
Bottom Hole Location:	**549 FSL 661 FWL SWSW(M)**		**Sec 3 T22S R31E**

1. Existing Roads

a. A copy of a USGS "Livingston Ridge, N.M." quadrangle map is attached showing the proposed location. The well location is spotted on this map, which shows the existing road system.

b. The well was staked by Terry J. Asel, Certificate No. 15079 on 4/30/09, certified 8/31/09.

c. Directions to Location: From Jal, NM go west on SH 128 for 42.4 miles. Turn north/east on CR 802 for 3.7 miles. Turn north on Lewis Whitlock (WIPP) road for 2.5 miles. Turn north on caliche road for 0.8 miles, then east on caliche road for 0.5 miles, then north on caliche road for 0.6 miles, then east on caliche road for 0.2 miles, then south on caliche for 0.1 miles, then southeast on caliche road for 0.1 miles, then east on caliche road for 0.3 miles to location.

2. New or Reconstructed Access Roads:

a. A new access road will be built. The access road will run approximately 750' from an existing road to the location. See Exhibit #2.

b. The maximum width of the road will be 15'. It will be crowned and made up of 6" of rolled and compacted caliche. Water will be deflected, as necessary, to avoid accumulation and prevent surface erosion.

c. Surface material will be native caliche. This material will be obtained from a BLM approved pit nearest in proximity to the location. The average grade will be approximately 1%.

d. No cattle guards, grates or fence cuts will be required. No turnouts are planned.

3. Location of Existing Wells:

Existing wells within a one mile radius of the proposed well are shown on Exhibit #3.

4. Location of Existing and/or Proposed Production Facilities.

a. In the event the well is found productive, the Lost Tank 3 tank battery would be utilized and the necessary production equipment will be installed at the well site. See proposed Production Facilities Layout diagram, Exhibit #4.

b. If necessary, electric power poles will be set along side of the access road.

c. All flowlines will adhere to API Standards, Exhibit #4

5. Location and types of Water Supply.

This well will be drilled using a combination of water mud systems. It will be obtained from commercial water stations in the area and will be hauled to location by transport truck using existing and proposed roads.

6. Construction Materials:

All caliche utilized for the drilling pad and proposed access road will be obtained from an existing BLM approved pit or from prevailing deposits found under the location. Will use BLM recommended use of extra caliche from other locations close by for roads, if available.

7. Methods of Handling Waste Material:

a. A closed loop system will be utilized consisting of above ground steel tanks and haul-off bins. Disposal of liquids, drilling fluids and cuttings will be disposed of at an approved facility, see C-144 CLEZ.
   1. Solids - CRI
   2. Liquids - Laguna

b. All trash, junk, and other waste material will be contained in trash cages or bins to prevent scattering. When the job is completed, all contents will be removed and disposed of in an approved sanitary landfill.

c. The supplier, including broken sacks, will pick up slats remaining after completion of well.

d. A Porto-john will be provided for the rig crews. This equipment will be properly maintained during the drilling and completion operations and will be removed when all operations are complete.

e. Disposal of fluids to be transported will be by the following companies:
   TFH Ltd. - Laguna SWD Facility

8. Ancillary Facilities: None needed

9. Well Site Layout

Exhibit #5 shows the proposed well site layout with dimensions of the pad layout and equipment location.

V-Door South Tanks East Pad 280' X 290'
Lost Tank 3 Federal #15 and #21 will use the same pad.

10. Plans for Surface Reclamation:

a. After concluding the drilling and/or completion operations, if the well is found non-commercial, the caliche will be removed from the pad and transported to the original caliche pit or used for other drilling locations. The road will be reclaimed as directed by the BLM. The original top soil will again be returned to the pad and contoured, as close as possible, to the original topography.

b. If the well is deemed commercially productive, caliche from areas of the pad site not required for operations will be reclaimed. The original top soil will be returned to the area of the drill pad not necessary to operate the well. These unused areas of the drill pad will be contoured, as close as possible, to match the original

topography, and the area will be seeded with an approved BLM mixture to re-establish vegetation.

11. Surface Ownership

The surface is owned by the U.S. Government and is administered by the BLM. The surface is multiple use with the primary uses of the region for the grazing of livestock and the production of oil and gas. The surface is leased to: Kenneth Smith Inc. 267 Smith Rd. Hobbs, NM 88240.
They will be notified of our intention to drill prior to any activity.

12. Other Information

a. The vegetation cover is generally sparse consisting of mesquite, yucca, shinnery oak, sandsage and perennial. native range grass. The topsoil is sandy in nature. Wildlife in the area is also sparse consisting of deer, coyotes, rabbits, rodents, reptiles, dove and quail.

b. There is no permanent or live water in the general proximity of the location.

c. There are no dwellings within 2 miles of the proposed well site.

d. A Cultural Resources Examination - this well is located in the Permian Basin MOA.

Pad + 1/4 mile road	$1,339.00	750	$0.15/ft over 1/4 mile	$0.00	$1,339.00
Pipeline - up to 1mile	$1,236.00	5410	$250 per 1/4 mile	$250.00	$1,236.00
Electric Line - up to 1mile	$618.00	2650	$0.17/ft over 1 mile	$0.00	$618.00
Total	$3,193.00			$0.00	$3,193.00

13. Bond Coverage:

Bond Coverage is Nationwide Bond No. ES0136.

Operators Representatives:

The OXY Permian representatives responsible for ensuring compliance of the surface use plan are listed below.

Larry Sammons
Production Leader
P.O. Box 50250
Midland, TX 79705
Office Phone: 432-685-5724
Cellular: 432-296-9323

Marvin McElroy
Production Coordinator
P.O. Box 1988
Carlsbad, NM 88220
Office Phone: 806-592-6200
Cellular: 806-215-6750

Nelson Emery
Drilling Superintendent
P.O. Box 4294
Houston, TX 77210
Office Phone: 713-215-7357
Cellular: 281-467-2862

Calvin (Dusty) Weaver
Construction Specialist
P.O. Box 50250
Midland, TX 79710
Office Phone: 432-685-5723
Cellular: 806-893-3067

Richard Jackson
Drilling Engineering Supervisor
P.O. Box 4294
Houston, TX 77210
Office Phone: 713-215-7235

Carmilo Arias
Drilling Engineer
P.O. Box 4294
Houston, TX 77210
Office Phone: 713-366-5953

OPERATOR CERTIFICATION

I hereby certify that I, or someone under my direct supervision, have inspected the drill site and access route proposed herein; that I am familiar with the conditions that presently exist; that I have full knowledge of State and Federal laws applicable to this operation; that the statements made in this APD package are, to the best of my knowledge, true and correct; and that the work associated with the operations proposed herein will be performed in conformity with this APD package and the terms and conditions under which it is approved. I also certify that I, or the company I represent, am responsible for the operations conducted under this application. These statements are subject to the provisions of 18 U.S.C. 1001 for the filing of false statements. Executed this 21st day of August, 2009.

Name: Denise Woods Denise Woods

Position: RMT Leaader

Address: 5 Greenway Plaza, Ste. 110, Houston, TX 77046

Telephone: 713-215-7154

E-mail: (optional): denise_woods@oxy.com

Company: OXY USA Inc.

Field Representative (if not above signatory): Marvin McElroy

Address (If different from above): P.O.Box 1410 McCamey TX 79752

Telephone (if different from above): 806-215-6750

E-mail (if different from above): Marvin_McElroy@oxy.com

PECOS DISTRICT
CONDITIONS OF APPROVAL

OPERATOR'S NAME:	OXY USA, INC.
LEASE NO.:	NM0417696
WELL NAME & NO.:	LOST TANK 3 FEDERAL #19
SURFACE HOLE FOOTAGE:	2558' FNL & 185' FWL
BOTTOM HOLE FOOTAGE	549' FSL & 661' FWL
LOCATION:	Section 3, T. 22 S., R 31 E., NMPM
COUNTY:	Eddy County, New Mexico

TABLE OF CONTENTS

Standard Conditions of Approval (COA) apply to this APD. If any deviations to these standards exist or special COAs are required, the section with the deviation or requirement will be checked below.

☐ **General Provisions**
☐ **Permit Expiration**
☐ **Archaeology, Paleontology, and Historical Sites**
☐ **Noxious Weeds**
☒ **Special Requirements**
- Lesser Prairie Chicken
- Ground-level Abandoned Well Marker

☒ **Construction**
- Notification
- Topsoil
- Closed Loop System
- Federal Mineral Material Pits
- Well Pads
- Roads

☒ **Road Section Diagram**
☒ **Drilling**
- **R-111-Potash**
- **Logging requirements**

☒ **Production (Post Drilling)**
- Well Structures & Facilities
- Pipelines
- Electric Lines

☒ **Closed Loop System/Interim Reclamation**
☐ **Final Abandonment/Reclamation**

I. GENERAL PROVISIONS

The approval of the Application For Permit To Drill (APD) is in compliance with all applicable laws and regulations: 43 Code of Federal Regulations 3160, the lease terms, Onshore Oil and Gas Orders, Notices To Lessees, New Mexico Oil Conservation Division (NMOCD) Rules, National Historical Preservation Act As Amended, and instructions and orders of the Authorized Officer. Any request for a variance shall be submitted to the Authorized Officer on Form 3160-5, Sundry Notices and Report on Wells.

II. PERMIT EXPIRATION

If the permit terminates prior to drilling and drilling cannot be commenced within 60 days after expiration, an operator is required to submit Form 3160-5, Sundry Notices and Reports on Wells, requesting surface reclamation requirements for any surface disturbance. However, if the operator will be able to initiate drilling within 60 days after the expiration of the permit, the operator must have set the conductor pipe in order to allow for an extension of 60 days beyond the expiration date of the APD. (Filing of a Sundry Notice is required for this 60 day extension.)

III. ARCHAEOLOGICAL, PALEONTOLOGY & HISTORICAL SITES

Any cultural and/or paleontological resource discovered by the operator or by any person working on the operator's behalf shall immediately report such findings to the Authorized Officer. The operator is fully accountable for the actions of their contractors and subcontractors. The operator shall suspend all operations in the immediate area of such discovery until written authorization to proceed is issued by the Authorized Officer. An evaluation of the discovery shall be made by the Authorized Officer to determine the appropriate actions that shall be required to prevent the loss of significant cultural or scientific values of the discovery. The operator shall be held responsible for the cost of the proper mitigation measures that the Authorized Officer assesses after consultation with the operator on the evaluation and decisions of the discovery. Any unauthorized collection or disturbance of cultural or paleontological resources may result in a shutdown order by the Authorized Officer.

IV. NOXIOUS WEEDS

The operator shall be held responsible if noxious weeds become established within the areas of operations. Weed control shall be required on the disturbed land where noxious weeds exist, which includes the roads, pads, associated pipeline corridor, and adjacent land affected by the establishment of weeds due to this action. The operator shall consult with the Authorized Officer for acceptable weed control methods, which include following EPA and BLM requirements and policies.

V. SPECIAL REQUIREMENT(S)

Lesser Praire Chicken Timing and Low Profile Well Marker.
Timing Limitation Stipulation/Condition of Approval for Lesser Prairie-Chicken: Oil and gas activities including 3-D geophysical exploration, and drilling will not be allowed in lesser prairie-chicken habitat during the period from March 1st through June 15th annually. During that period, other activities that produce noise or involve human activity, such as the maintenance of oil and gas facilities, geophysical exploration other than 3-D operations, and pipeline, road, and well pad construction, will be allowed except between 3:00 am and 9:00 am. The 3:00 am to 9:00 am restriction will not apply to normal, around-the-clock operations, such as venting, flaring, or pumping, which do not require a human presence during this period. Additionally, no new drilling will be allowed within up to 200 meters of leks known at the time of permitting. Normal vehicle use on existing roads will not be restricted. Exhaust noise from pump jack engines must be muffled or otherwise controlled so as not to exceed 75 db measured at 30 ft. from the source of the noise.

Ground-level Abandoned Well Marker to avoid raptor perching: Upon the plugging and subsequent abandonment of the well, the well marker will be installed at ground level on a plate containing the pertinent information for the plugged well. For more installation details, contact the Carlsbad Field Office at 575-234-5972.

VI. CONSTRUCTION

A. NOTIFICATION

The BLM shall administer compliance and monitor construction of the access road and well pad. Notify the Carlsbad Field Office at (575) 234-5972 at least 3 working days prior to commencing construction of the access road and/or well pad.

When construction operations are being conducted on this well, the operator shall have the approved APD and Conditions of Approval (COA) on the well site and they shall be made available upon request by the Authorized Officer.

B. TOPSOIL

The operator shall stockpile the topsoil of the well pad. The topsoil shall not be used to backfill the reserve pit and will be used for interim and final reclamation.

C. Closed Loop System

Closed Loop System V-Door South

Tanks are required for drilling operations: No Pits.

The operator shall properly dispose of drilling contents at an authorized disposal site.

D. FEDERAL MINERAL MATERIALS PIT

If the operator elects to surface the access road and/or well pad, mineral materials extracted during construction of the reserve pit may be used for surfacing the well pad and access road and other facilities on the lease.

Payment shall be made to the BLM prior to removal of any additional federal mineral materials from any site other than the reserve pit. Call the
Carlsbad Field Office at (575) 234-5972.

E. WELL PAD SURFACING

Surfacing of the well pad is not required.

If the operator elects to surface the well pad, the surfacing material may be required to be removed at the time of reclamation.

The well pad shall be constructed in a manner which creates the smallest possible surface disturbance, consistent with safety and operational needs.

F. ON LEASE ACCESS ROADS

Road Width
The access road shall have a driving surface that creates the smallest possible surface disturbance and does not exceed fourteen (14) feet in width. The maximum width of surface disturbance, when constructing the access road, shall not exceed thirty (30) feet.

Surfacing
Surfacing material is not required on the new access road driving surface. If the operator elects to surface the new access road or pad, the surfacing material may be required to be removed at the time of reclamation.

Where possible, no improvements should be made on the unsurfaced access road other than to remove vegetation as necessary, road irregularities, safety issues, or to fill low areas that may sustain standing water.

The Authorized Officer reserves the right to require surfacing of any portion of the access road at any time deemed necessary. Surfacing may be required in the event the road deteriorates, erodes, road traffic increases, or it is determined to be beneficial for future field development. The surfacing depth and type of material will be determined at the time of notification.

Crowning
Crowning shall be done on the access road driving surface. The road crown shall have a grade of approximately 2% (i.e., a 1" crown on a 14' wide road). The road shall conform to Figure 1; cross section and plans for typical road construction.

Ditching

Ditching shall be required on both sides of the road.

Turnouts
Vehicle turnouts shall be constructed on the road. Turnouts shall be intervisible with interval spacing distance less than 1000 feet. Turnouts shall be constructed on all blind curves. Turnouts shall conform to the following diagram:

Standard Turnout – Plan View

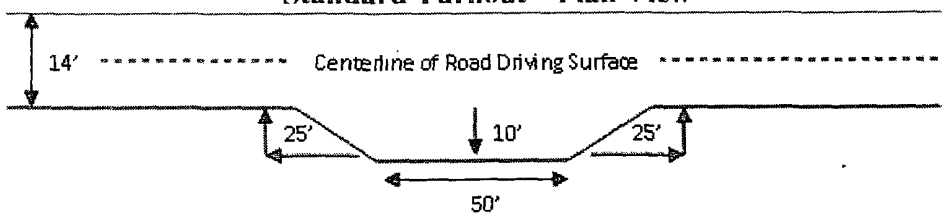

Drainage
Drainage control systems shall be constructed on the entire length of road (e.g. ditches, sidehill outsloping and insloping, lead-off ditches, culvert installation, and low water crossings).

A typical lead-off ditch has a minimum depth of 1 foot below and a berm of 6 inches above natural ground level. The berm shall be on the down-slope side of the lead-off ditch.

Cross Section Of Typical Lead-off Ditch

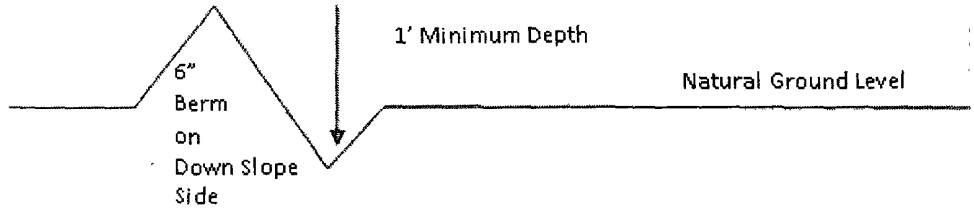

All lead-off ditches shall be graded to drain water with a 1 percent minimum to 3 percent maximum ditch slope. The spacing interval are variable for lead-off ditches and shall be determined according to the formula for spacing intervals of lead-off ditches, but may be amended depending upon existing soil types and centerline road slope (in %);

Formula for Spacing Interval of Lead-off Ditches

Example - On a 4% road slope that is 400 feet long, the water flow shall drain water into a lead-off ditch. Spacing interval shall be determined by the following formula:

400 foot road with 4% road slope: 400'/4% + 100' = 200' lead-off ditch interval

Culvert Installations

Appropriately sized culvert(s) shall be installed at the deep waterway channel flow crossing.

Cattleguards

An appropriately sized cattleguard(s) sufficient to carry out the project shall be installed and maintained at fence crossing(s).

Any existing cattleguard(s) on the access road shall be repaired or replaced if they are damaged or have deteriorated beyond practical use. The operator shall be responsible for the condition of the existing cattleguard(s) that are in place and are utilized during lease operations.

A gate shall be constructed and fastened securely to H-braces.

Fence Requirement

Where entry is required across a fence line, the fence shall be braced and tied off on both sides of the passageway prior to cutting.

The operator shall notify the private surface landowner or the grazing allotment holder prior to crossing any fence(s).

Public Access

Public access on this road shall not be restricted by the operator without specific written approval granted by the Authorized Officer.

Figure 1 – Cross Sections and Plans For Typical Road Sections

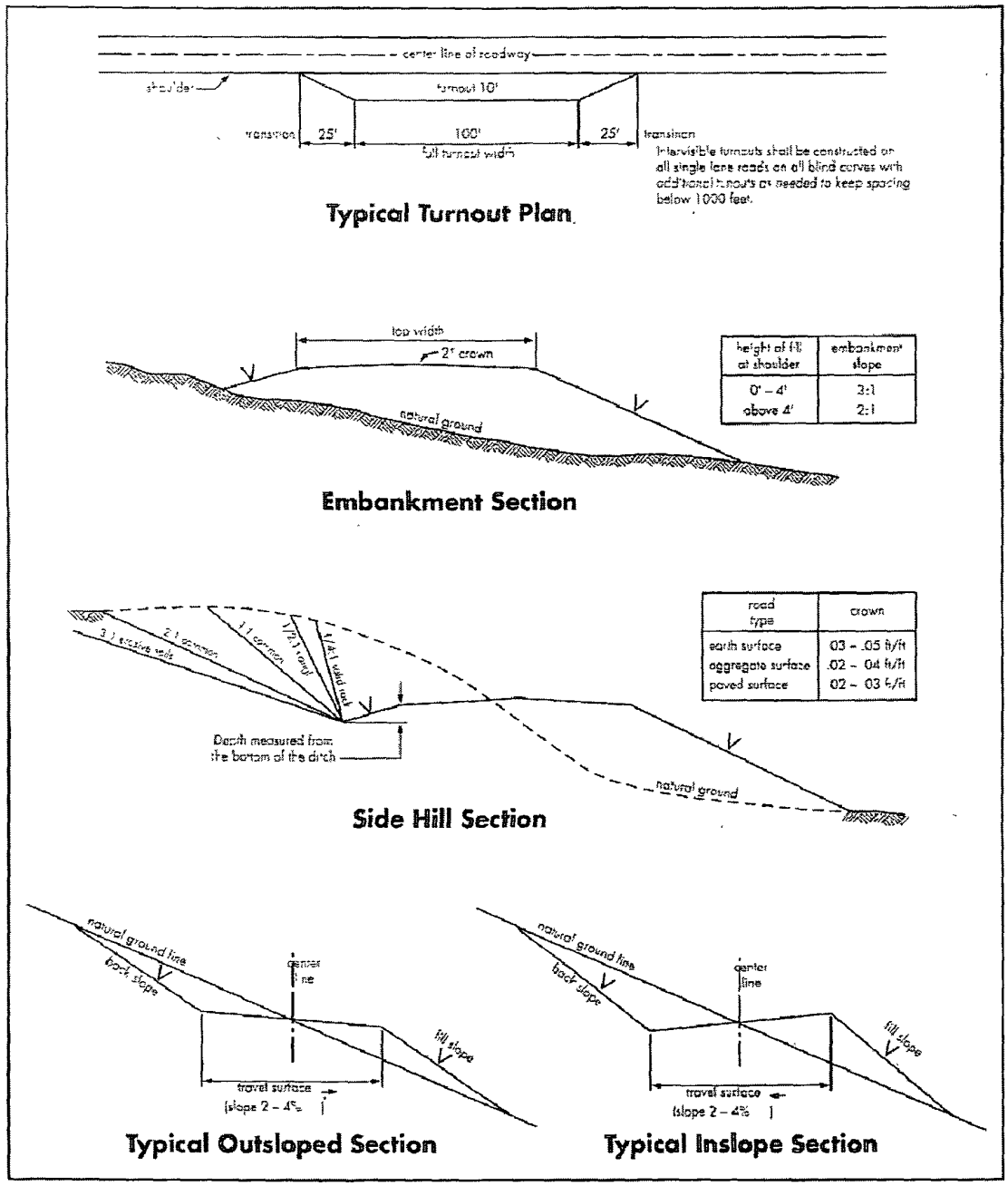

VII. DRILLING

A. DRILLING OPERATIONS REQUIREMENTS

The BLM is to be notified a minimum of 4 hours in advance for a representative to witness:

a. Spudding well
b. Setting and/or Cementing of all casing strings
c. BOPE tests

☒ **Eddy County**
Call the Carlsbad Field Office, 620 East Greene St., Carlsbad, NM 88220, (575) 361-2822

1. **Although Hydrogen Sulfide has not been reported in this section, it is always a potential hazard. If Hydrogen Sulfide is encountered, please report measured amounts and formations to the BLM.**

2. Unless the production casing has been run and cemented or the well has been properly plugged, the drilling rig shall not be removed from over the hole without prior approval.

3. Floor controls are required for 3M or Greater systems. These controls will be on the rig floor, unobstructed, readily accessible to the driller and will be operational at all times during drilling and/or completion activities. Rig floor is defined as the area immediately around the rotary table; the area immediately above the substructure on which the draw works is located, this does not include the dog house or stairway area.

4. **The record of the drilling rate along with the CAL/GR/N well log run from TD to surface will be submitted to the BLM office as well as all other logs run on the borehole 30 days from completion. If available, a digital copy of the logs is to be submitted in addition to the paper copies. The Rustler top and top and bottom of Salt is to be recorded on the Completion Report.**

B. CASING

Changes to the approved APD casing and cement program require submitting a sundry and receiving approval prior to work. Failure to obtain approval prior to work will result in an Incident of Non-Compliance being issued.

Centralizers required on surface casing per Onshore Order 2.III.B.1.f.

Wait on cement (WOC) time for a primary cement job will be a minimum 18 hours for a water basin, 24 hours in the potash area, or 500 pounds compressive strength, whichever is greater for all casing strings. Provide compressive strengths including hours to reach required 500 pounds compressive strength prior to cementing each casing string. See individual casing strings for details regarding lead cement slurry requirements.

No pea gravel permitted for remedial or fall back remedial without prior authorization from the BLM engineer.

R-111-Potash
Possible high pressure air pockets in the Rustler and Salado Groups.
Possible water and brine flows in the Salado and Castile Groups.
Possible lost circulation in the Delaware and Bone Spring formations.

1. The **11-3/4** inch surface casing shall be set **at approximately 680 feet (a minimum of 25 feet into the Rustler Anhydrite and above the salt)** and cemented to the surface. **If the salt is encountered at a shallower depth, the casing is to be set a minimum of 25 feet above the salt.**

    a. If cement does not circulate to the surface, the appropriate BLM office shall be notified and a temperature survey utilizing an electronic type temperature survey with surface log readout will be used or a cement bond log shall be run to verify the top of the cement.

    b. Wait on cement (WOC) time for a primary cement job is to include the lead cement slurry.

    c. Wait on cement (WOC) time for a remedial job will be a minimum of 4 hours after bringing cement to surface or 500 pounds compressive strength, whichever is greater.

    d. If cement falls back, remedial cementing will be done prior to drilling out that string.

2. The minimum required fill of cement behind the **8-5/8** inch intermediate casing is: **The intermediate should be set in the Fletcher Anhydrite or Lamar Limestone within 100 to 600 feet below the base of the salt.**

    ☒ Cement to surface. If cement does not circulate see B.1.a, c-d above.
    Wait on cement (WOC) time for a primary cement job is to include the lead cement slurry due to potash concerns.

3. The minimum required fill of cement behind the **5-1/2** inch production casing is:

   a. First stage to DV tool, cement shall:

   ☒ Cement to circulate. If cement does not circulate, contact the appropriate BLM office, before proceeding with second stage cement job.

   b. Second stage above DV tool, cement shall:

   ☒ Cement to circulate. If cement does not circulate, contact the appropriate BLM office, before proceeding with third stage cement job.

   c. Third stage above DV tool, cement shall:

   ☒ Cement to surface. If cement does not circulate, contact the appropriate BLM office.

4. If hardband drill pipe is rotated inside casing, returns will be monitored for metal. If metal is found in samples, drill pipe will be pulled and rubber protectors which have a larger diameter than the tool joints of the drill pipe will be installed prior to continuing drilling operations.

5. Whenever a casing string is cemented in the R-111-Potash area, the NMOCD requirements shall be followed.

C. PRESSURE CONTROL

1. All blowout preventer (BOP) and related equipment (BOPE) shall comply with well control requirements as described in Onshore Oil and Gas Order No. 2 and API RP 53 Sec. 17.

2. **Variance approved to use flex line from BOP to choke manifold. Check condition of 3" flexible line from BOP to choke manifold, replace if exterior is damaged or if line fails test. Line to be as straight as possible with no hard bends.**

3. Minimum working pressure of the blowout preventer (BOP) and related equipment (BOPE) required for drilling below the surface casing shoe shall be **3000 (3M)** psi. **Operator is using a 5M system but testing as a 3M.**

4. The appropriate BLM office shall be notified a minimum of 4 hours in advance for a representative to witness the tests.

    a. The tests shall be done by an independent service company.

    b. The results of the test shall be reported to the appropriate BLM office.

    c. All tests are required to be recorded on a calibrated test chart. **A copy of the BOP/BOPE test chart and a copy of independent service company test will be submitted to the appropriate BLM office.**

    d. The BOP/BOPE test shall include a low pressure test from 250 to 300 psi. The test will be held for a minimum of 10 minutes if test is done with a test plug and 30 minutes without a test plug.

    e. **Effective November 1, 2008, no variances will be granted on reduced pressure tests on the surface casing and BOP/BOPE. Onshore Order 2 requirements will be in effect.**

D. DRILL STEM TEST

If drill stem tests are performed, Onshore Order 2.III.D shall be followed.

RGH 101409

VIII. PRODUCTION (POST DRILLING)

A. WELL STRUCTURES & FACILITIES

Placement of Production Facilities
Production facilities should be placed on the well pad to allow for maximum interim recontouring and revegetation of the well location.

Containment Structures
The containment structure shall be constructed to hold the capacity of the entire contents of the largest tank, plus 24 hour production, unless more stringent protective requirements are deemed necessary by the Authorized Officer.

Painting Requirement
All above-ground structures including meter housing that are not subject to safety requirements shall be painted a flat non-reflective paint color
Shale Green, Munsell Soil Color Chart # 5Y 4/2

B. PIPELINES

STANDARD STIPULATIONS FOR SURFACE INSTALLED PIPELINES

A copy of the APD and attachments, including stipulations, survey plat and/or map, will be on location during construction. BLM personnel may request to you a copy of your permit during construction to ensure compliance with all stipulations.

Holder agrees to comply with the following stipulations to the satisfaction of the Authorized Officer:

1. The holder shall indemnify the United States against any liability for damage to life or property arising from the occupancy or use of public lands under this grant.

2. The holder shall comply with all applicable Federal laws and regulations existing or hereafter enacted or promulgated. In any event, the holder shall comply with the Toxic Substances Control Act of 1976 as amended, 15 USC 2601 et seq. (1982) with regards to any toxic substances that are used, generated by or stored on the right-of-way or on facilities authorized under this right-of-way grant. (See 40 CFR, Part 702-799 and especially, provisions on polychlorinated biphenyls, 40 CFR 761.1-761.193.) Additionally, any release of toxic substances (leaks, spills, etc.) in excess of the reportable quantity established by 40 CFR, Part 117 shall be reported as required by the Comprehensive Environmental Response, Compensation, and Liability Act, section 102b. A copy of any report required or requested by any Federal agency or State government as a result of a reportable release or spill of any toxic substances shall be furnished to the authorized officer concurrent with the filing of the reports to the involved Federal agency or State government.

3. The holder agrees to indemnify the United States against any liability arising from the release of any hazardous substance or hazardous waste (as these terms are defined in the Comprehensive Environmental Response, Compensation and Liability Act of 1980, 42 U.S.C. 9601, et seq. or the Resource Conservation and Recovery Act, 42 U.S.C. 6901, et seq.) on the Right-of-Way (unless the release or threatened release is wholly unrelated to activity of the Right-of-Way holder's activity on the Right-of-Way), or resulting from the activity of the Right-of-Way holder on the Right-of-Way. This agreement applies without regard to whether a release is caused by the holder, its agent, or unrelated third parties.

4. The holder shall be liable for damage or injury to the United States to the extent provided by 43 CFR Sec. 2883.1-4. The holder shall be held to a standard of strict liability for damage or injury to the United States resulting from pipe rupture, fire, or spills caused or substantially aggravated by any of the following within the right-of-way or permit area:

a. Activities of the holder including, but not limited to construction, operation, maintenance, and termination of the facility.

b. Activities of other parties including, but not limited to:

(1) Land clearing.
(2) Earth-disturbing and earth-moving work.
(3) Blasting.
(4) Vandalism and sabotage.

c. Acts of God.

The maximum limitation for such strict liability damages shall not exceed one million dollars ($1,000,000) for any one event, and any liability in excess of such amount shall be determined by the ordinary rules of negligence of the jurisdiction in which the damage or injury occurred.

This section shall not impose strict liability for damage or injury resulting primarily from an act of war or from the negligent acts or omissions of the United States.

5. If, during any phase of the construction, operation, maintenance, or termination of the pipeline, any oil, salt water, or other pollutant should be discharged from the pipeline system, impacting Federal lands, the control and total removal, disposal, and cleaning up of such oil, salt water, or other pollutant, wherever found, shall be the responsibility of the holder, regardless of fault. Upon failure of the holder to control, dispose of, or clean up such discharge on or affecting Federal lands, or to repair all damages resulting therefrom, on the Federal lands, the Authorized Officer may take such measures as he deems necessary to control and clean up the discharge and restore the area, including, where appropriate, the aquatic environment and fish and wildlife habitats, at the full expense of the holder. Such action by the Authorized Officer shall not relieve the holder of any responsibility as provided herein.

6. All construction and maintenance activity will be confined to the authorized right-of-way width of **25** feet.

7. No blading or clearing of any vegetation will be allowed unless approved in writing by the Authorized Officer.

8. The holder shall install the pipeline on the surface in such a manner that will minimize suspension of the pipeline across low areas in the terrain. In hummocky of duney areas, the pipeline will be "snaked" around hummocks and dunes rather then suspended across these features.

9. The pipeline shall be buried with a minimum of **24** inches under all roads, "two-tracks," and trails. Burial of the pipe will continue for 20 feet on each side of each crossing. The condition of the road, upon completion of construction, shall be returned to at least its former state with no bumps or dips remaining in the road surface.

10. The holder shall minimize disturbance to existing fences and other improvements on public lands. The holder is required to promptly repair improvements to at least their former state. Functional use of these improvements will be maintained at all times. The holder will contact the owner of any improvements prior to disturbing them. When necessary to pass through a fence line, the fence shall be braced on both sides of the passageway prior to cutting of the fence. No permanent gates will be allowed unless approved by the Authorized Officer.

11. In those areas where erosion control structures are required to stabilize soil conditions, the holder will install such structures as are suitable for the specific soil conditions being encountered and which are in accordance with sound resource management practices.

12. Excluding the pipe, all above-ground structures not subject to safety requirement shall be painted by the holder to blend with the natural color of the landscape. The paint used shall be a color which simulates "Standard Environmental Colors" – **Shale Green**, Munsell Soil Color No. 5Y 4/2; designated by the Rocky Mountain Five State Interagency Committee.

13. The pipeline will be identified by signs at the point of origin and completion of the right-of-way and at all road crossings. At a minimum, signs will state the holder's name, BLM serial number, and the product being transported. Signs will be maintained in a legible condition for the life of the pipeline.

14. The holder shall not use the pipeline route as a road for purposes other than routine maintenance as determined necessary by the Authorized Officer in consultation with the holder. The holder will take whatever steps are necessary to ensure that the pipeline route is not used as a roadway.

15. Any cultural and/or paleontological resource (historic or prehistoric site or object) discovered by the holder, or any person working on his behalf, on public or Federal land shall be immediately reported to the authorized officer. Holder shall suspend all operations in the immediate area of such discovery until written authorization to proceed is issued by the authorized officer. An evaluation of the discovery will be made by the authorized officer to determine appropriate cultural or scientific values. The holder will be responsible for the cost of evaluation and any decision as to proper mitigation measures will be made by the authorized officer after consulting with the holder.

C. ELECTRIC LINES

STANDARD STIPULATIONS FOR OVERHEAD ELECTRIC DISTRIBUTION LINES

A copy of the APD and attachments, including stipulations, survey plat and/or map, will be on location during construction. BLM personnel may request to you a copy of your permit during construction to ensure compliance with all stipulations.

Holder agrees to comply with the following stipulations to the satisfaction of the Authorized Officer:

1. The holder shall indemnify the United States against any liability for damage to life or property arising from the occupancy or use of public lands under this grant.

2. The holder shall comply with all applicable Federal laws and regulations existing or hereafter enacted or promulgated. In any event, the holder shall comply with the Toxic Substances Control Act of 1976 as amended, 15 USC 2601 et seq. (1982) with regards to any toxic substances that are used, generated by or stored on the right-of-way or on facilities authorized under this right-of-way grant. (See 40 CFR, Part 702-799 and especially, provisions on polychlorinated biphenyls, 40 CFR 761.1-761.193.) Additionally, any release of toxic substances (leaks, spills, etc.) in excess of the reportable quantity established by 40 CFR, Part 117 shall be reported as required by the Comprehensive Environmental Response, Compensation, and Liability Act, section 102b. A copy of any report required or requested by any Federal agency or State government as a result of a reportable release or spill of any toxic substances shall be furnished to the authorized officer concurrent with the filing of the reports to the involved Federal agency or State government.

3. The holder agrees to indemnify the United States against any liability arising from the release of any hazardous substance or hazardous waste (as these terms are defined in the Comprehensive Environmental Response, Compensation and Liability Act of 1980, 42 U.S.C. 9601, et seq. or the Resource Conservation and Recovery Act, 42 U.S.C. 6901, et seq.) on the Right-of-Way (unless the release or threatened release is wholly unrelated to the Right-of-Way holder's activity on the Right-of-Way), or resulting from the activity of the Right-of-Way holder on the Right-of-Way. This agreement applies without regard to whether a release is caused by the holder, its agent, or unrelated third parties.

4. There will be no clearing or blading of the right-of-way unless otherwise agreed to in writing by the Authorized Officer.

5. Powerlines shall be constructed in accordance to standards outlined in "Suggested Practices for Raptor Protection on Powerlines, " Raptor Research Foundation, Inc., 1981. The holder shall assume the burden and expense of proving that pole designs not shown in the above publication are "raptor safe." Such proof shall be provided by a raptor expert approved by the Authorized Officer. The BLM reserves the right to require

modification or additions to all powerline structures placed on this right-of-way, should they be necessary to ensure the safety of large perching birds. Such modifications and/or additions shall be made by the holder without liability or expense to the United States.

6. The holder shall minimize disturbance to existing fences and other improvements on public lands. The holder is required to promptly repair improvements to at least their former state. Functional use of these improvements will be maintained at all times. The holder will contact the owner of any improvements prior to disturbing them. When necessary to pass through a fence line, the fence shall be braced on both sides of the passageway prior to cutting the fence. No permanent gates will be allowed unless approved by the Authorized Officer.

7. The BLM serial number assigned to this authorization shall be posted in a permanent, conspicuous manner where the power line crosses roads and at all serviced facilities. Numbers will be at least two inches high and will be affixed to the pole nearest the road crossing and at the facilities served.

8. Upon cancellation, relinquishment, or expiration of this grant, the holder shall comply with those abandonment procedures as prescribed by the Authorized Officer.

9. All surface structures (poles, lines, transformers, etc.) shall be removed within 180 days of abandonment, relinquishment, or termination of use of the serviced facility or facilities or within 180 days of abandonment, relinquishment, cancellation, or expiration of this grant, whichever comes first. This will not apply where the power line extends service to an active, adjoining facility or facilities.

10. Any cultural and/or paleontological resource (historic or prehistoric site or object) discovered by the holder, or any person working on his behalf, on public or Federal land shall be immediately reported to the Authorized Officer. Holder shall suspend all operations in the immediate area of such discovery until written authorization to proceed is issued by the Authorized Officer. An evaluation of the discovery will be made by the Authorized Officer to determine appropriate actions to prevent the loss of significant cultural or scientific values. The holder will be responsible for the cost of evaluation and any decision as to proper mitigation measures will be made by the Authorized Officer after consulting with the holder.

11. Special Stipulations:
- For reclamation remove poles, lines, transformer, etc. and dispose of properly.
- Fill in any holes from the poles removed.
- See attached reclamation plans.

IX. INTERIM RECLAMATION & RESERVE PIT CLOSURE

A. INTERIM RECLAMATION

If the well is a producer, interim reclamation shall be conducted on the well site in accordance with the orders of the Authorized Officer. The operator shall submit a Sundry Notices and Reports on Wells (Notice of Intent), Form 3160-5, prior to conducting interim reclamation.

During the life of the development, all disturbed areas not needed for active support of production operations should undergo interim reclamation in order to minimize the environmental impacts of development on other resources and uses.

The operators should work with BLM surface management specialists to devise the best strategies to reduce the size of the location. Any reductions should allow for remedial well operations, as well as safe and efficient removal of oil and gas.

During reclamation, the removal of caliche is important to increasing the success of revegetating the site. Removed caliche may be used for road repairs, fire walls or for building other roads and locations. In order to operate the well or complete workover operations, it may be necessary to drive, park and operate on restored interim vegetation within the previously disturbed area. Disturbing revegetated areas for production or workover operations will be allowed. If there is significant disturbance and loss of vegetation, the area will need to be revegetated. Communicate with the appropriate BLM office for any exceptions/exemptions if needed.

Seed Mixture for LPC Sand/Shinnery Sites

The holder shall seed all disturbed areas with the seed mixture listed below. The seed mixture shall be planted in the amounts specified in pounds of pure live seed (PLS)* per acre. There shall be no primary or secondary noxious weeds in the seed mixture. Seed will be tested and the viability testing of seed will be done in accordance with State law(s) and within nine (9) months prior to purchase. Commercial seed will be either certified or registered seed. The seed container will be tagged in accordance with State law(s) and available for inspection by the authorized officer.

Seed will be planted using a drill equipped with a depth regulator to ensure proper depth of planting where drilling is possible. The seed mixture will be evenly and uniformly planted over the disturbed area (smaller/heavier seeds have a tendency to drop the bottom of the drill and are planted first). The holder shall take appropriate measures to ensure this does not occur. Where drilling is not possible, seed will be broadcast and the area shall be raked or chained to cover the seed. When broadcasting the seed, the pounds per acre are to be doubled. The seeding will be repeated until a satisfactory stand is established as determined by the authorized officer. Evaluation of growth will not be made before completion of at least one full growing season after seeding.

Species to be planted in pounds of pure live seed* per acre:

Species	lb/acre
Plains Bristlegrass	5lbs/A
Sand Bluestem	5lbs/A
Little Bluestem	3lbs/A
Big Bluestem	6lbs/A
Plains Coreopsis	2lbs/A
Sand Dropseed	1lbs/A
**Four-winged Saltbush	5lbs/A

* This can be used around well pads and other areas where caliche cannot be removed.

*Pounds of pure live seed:

Pounds of seed **x** percent purity **x** percent germination = pounds pure live seed

X. FINAL ABANDONMENT & REHABILITATION REQUIREMENTS

Upon abandonment of the well and/or when the access road is no longer in service the Authorized Officer shall issue instructions and/or orders for surface reclamation and restoration of all disturbed areas.

On private surface/federal mineral estate land the reclamation procedures on the road and well pad shall be accomplished in accordance with the private surface land owner agreement.