Forehand 27 State # 4

Location: ***Section 22_T23S_R27E_Eddy County, New Mexico***

API # 30-015-42309

Well Bore Plan

Caza Oil&Gas,Inc.

Depth (TVD-ft)

Wellbore Sketch

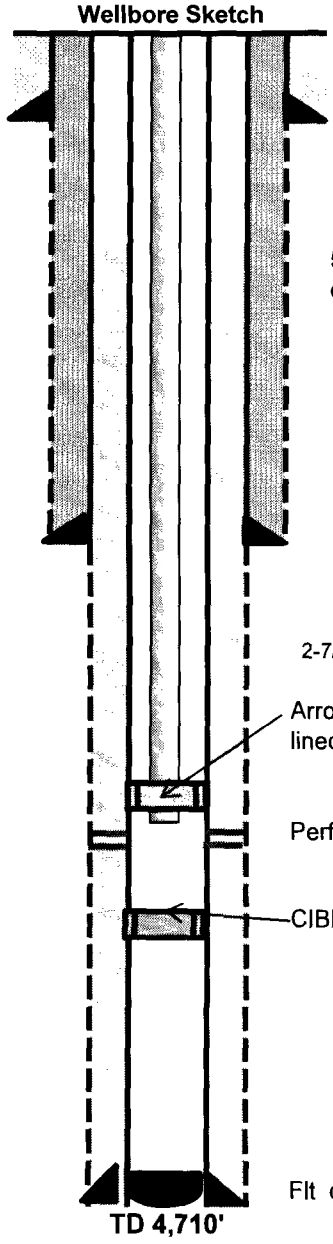

20" Cond @ ± 40'

13-3/8" 48 # H-40 ST&C @ 476 ft

Cmt w/ 265 sks "C" w/ 4% gel + .25pps celloflake mixed 13.5 ppg. 1.75 yield. Tail w/ 150 sks "C" w/ 2% CACL2 14.8 ppg 1.34 yield-Circ 45 sks

8-5/8" 24 # J-55 ST&C @ 2062 ft

Cmt w/ 595 sks "C" w/ lite 4% gel + .25pps celloflake mixed 12.5 ppg. 2.05 yield. Tail w/ 200 sks "C" w/ 1% CACL2 14.8 ppg 1.33 yield-Circ 27 sks

5.5" 15.5# J-55 LT&C @ 4704 ft

5-1/2" cmt w/ 650 sks "C" 14.8 ppg 1.32 yield. Lift pressure 1244 psi.