Form 3160-3
(June 2015)

OCD – HOBBS
04/09/2020
RECEIVED

FORM APPROVED
OMB No. 1004-0137
Expires: January 31, 2018

UNITED STATES
DEPARTMENT OF THE INTERIOR
BUREAU OF LAND MANAGEMENT

APPLICATION FOR PERMIT TO DRILL OR REENTER

5. Lease Serial No.
NMNM0002889

6. If Indian, Allotee or Tribe Name

1a. Type of work: ☑ DRILL ☐ REENTER

1b. Type of Well: ☑ Oil Well ☐ Gas Well ☐ Other

1c. Type of Completion: ☐ Hydraulic Fracturing ☑ Single Zone ☐ Multiple Zone

7. If Unit or CA Agreement, Name and No.

8. Lease Name and Well No.
DOS EQUIS 11-14 FEDERAL COM
322999
63H

2. Name of Operator
CIMAREX ENERGY COMPANY 215099

9. API Well No.
30-025-47084

3a. Address
600 N. Marienfeld St., Suite 600, Midland, TX 79701

3b. Phone No. *(include area code)*
(432) 620-1936

10. Field and Pool, or Exploratory 98309
WC-025 G-08 S243213C; WOLFCAMP/W

4. Location of Well *(Report location clearly and in accordance with any State requirements.*)*
At surface NENE / 384 FNL / 1176 FEL / LAT 32.238376 / LONG -103.640618
At proposed prod. zone SWSE / 100 FSL / 1356 FEL / LAT 32.21066 / LONG -103.641223

11. Sec., T. R. M. or Blk. and Survey or Area
SEC 11/T24S/R32E/NMP

14. Distance in miles and direction from nearest town or post office*
28 miles

12. County or Parish
LEA

13. State
NM

15. Distance from proposed* location to nearest property or lease line, ft. (Also to nearest drig. unit line, if any)
384 feet

16. No of acres in lease
680

17. Spacing Unit dedicated to this well
320.0

18. Distance from proposed location* to nearest well, drilling, completed, applied for, on this lease, ft.
20 feet

19. Proposed Depth
12300 feet / 22198 feet

20. BLM/BIA Bond No. in file
FED: NMB001188

21. Elevations (Show whether DF, KDB, RT, GL, etc.)
3601 feet

22. Approximate date work will start*
02/29/2020

23. Estimated duration
30 days

24. Attachments

The following, completed in accordance with the requirements of Onshore Oil and Gas Order No. 1, and the Hydraulic Fracturing rule per 43 CFR 3162.3-3 (as applicable)

1. Well plat certified by a registered surveyor.
2. A Drilling Plan.
3. A Surface Use Plan (if the location is on National Forest System Lands, the SUPO must be filed with the appropriate Forest Service Office).
4. Bond to cover the operations unless covered by an existing bond on file (see Item 20 above).
5. Operator certification.
6. Such other site specific information and/or plans as may be requested by the BLM.

25. Signature
(Electronic Submission)

Name *(Printed/Typed)*
Amithy Crawford / Ph: (432) 620-1909

Date
09/30/2019

Title
Regulatory Analyst

Approved by *(Signature)*
(Electronic Submission)

Name *(Printed/Typed)*
Cody Layton / Ph: (575) 234-5959

Date
03/31/2020

Title
Assistant Field Manager Lands & Minerals

Office
Carlsbad Field Office

Application approval does not warrant or certify that the applicant holds legal or equitable title to those rights in the subject lease which would entitle the applicant to conduct operations thereon.
Conditions of approval, if any, are attached.

Title 18 U.S.C. Section 1001 and Title 43 U.S.C. Section 1212, make it a crime for any person knowingly and willfully to make to any department or agency of the United States any false, fictitious or fraudulent statements or representations as to any matter within its jurisdiction.

GCP Rec 04/09/2020

Kz

04/16/2020
REQUIRES NSL

NSL

APPROVED WITH CONDITIONS

(Continued on page 2)

*(Instructions on page 2)

Approval Date: 03/31/2020

Confidential

PECOS DISTRICT
DRILLING CONDITIONS OF APPROVAL

OPERATOR'S NAME:	**Cimarex Energy Company**
LEASE NO.:	**NMNM0002889**
WELL NAME & NO.:	Dos Equis 11-14 Federal Com 63H
SURFACE HOLE FOOTAGE:	384'/N & 1176'/E
BOTTOM HOLE FOOTAGE	100'/S & 1356'/E
LOCATION:	Section 11, T.24 S., R.32 E., NMPM
COUNTY:	Lea County, New Mexico

COA

H2S	◉ Yes	○ No	
Potash	◉ None	○ Secretary	○ R-111-P
Cave/Karst Potential	◉ Low	○ Medium	○ High
Cave/Karst Potential	○ Critical		
Variance	○ None	◉ Flex Hose	○ Other
Wellhead	○ Conventional	◉ Multibowl	○ Both
Other	☐ 4 String Area	☐ Capitan Reef	☐ WIPP
Other	☑ Fluid Filled	☐ Cement Squeeze	☐ Pilot Hole
Special Requirements	☐ Water Disposal	☑ COM	☐ Unit

A. HYDROGEN SULFIDE

A Hydrogen Sulfide (H2S) Drilling Plan shall be activated 500 feet prior to drilling into the **Double X Pool (Delaware)** formation. As a result, the Hydrogen Sulfide area must meet Onshore Order 6 requirements, which includes equipment and personnel/public protection items. If Hydrogen Sulfide is encountered, please provide measured values and formations to the BLM.

B. CASING

1. The **10-3/4 inch** surface casing shall be set at approximately **1,250 feet** (a minimum of **25 feet (Lea County)** into the Rustler Anhydrite and above the salt) and cemented to the surface.

    a. If cement does not circulate to the surface, the appropriate BLM office shall be notified and a temperature survey utilizing an electronic type temperature survey with surface log readout will be used or a cement bond log shall be run to verify the top of the cement. Temperature survey will be run a minimum of six hours after pumping cement and ideally between 8-10 hours after completing the cement job.

b. Wait on cement (WOC) time for a primary cement job will be a minimum of **8 hours** or 500 pounds compressive strength, whichever is greater. (This is to include the lead cement)
c. Wait on cement (WOC) time for a remedial job will be a minimum of 4 hours after bringing cement to surface or 500 pounds compressive strength, whichever is greater.
d. If cement falls back, remedial cementing will be done prior to drilling out that string.

Intermediate casing must be kept fluid filled to meet BLM minimum collapse requirement.

2. The minimum required fill of cement behind the **7-5/8 inch** intermediate casing and shall be set at approximately **12,291 feet** is:

Option 1:

- Cement to surface. If cement does not circulate see B.1.a, c-d above.
  Wait on cement (WOC) time for a primary cement job is to include the lead cement slurry due to cave/karst or potash.

Option 2:

Operator has proposed a DV tool, the depth may be adjusted as long as the cement is changed proportionally. The DV tool may be cancelled if cement circulates to surface on the first stage.

a. First stage to DV tool: Cement to circulate. If cement does not circulate off the DV tool, contact the appropriate BLM office before proceeding with second stage cement job.

b. Second stage above DV tool:

- Cement to surface. If cement does not circulate, contact the appropriate BLM office.
  Wait on cement (WOC) time for a primary cement job is to include the lead cement slurry due to cave/karst or potash.

3. The minimum required fill of cement behind the **5-1/2 inch** production casing is:

(Single Stage):

- Cement should tie-back at least **200 feet** into previous casing string. Operator shall provide method of verification.

C. PRESSURE CONTROL

1. Variance approved to use flex line from BOP to choke manifold. Manufacturer's specification to be readily available. No external damage to flex line. Flex line to be installed as straight as possible (no hard bends).'

2. Minimum working pressure of the blowout preventer (BOP) and related equipment (BOPE) required for drilling below the surface casing shoe shall be **5000 (5M) psi**.

3. Operator has proposed a multi-bowl wellhead assembly. This assembly will only be tested when installed on the surface casing. Minimum working pressure of the blowout preventer (BOP) and related equipment (BOPE) required for drilling below the intermediate casing shoe shall be **10,000 (10M)** psi.

    a. Wellhead shall be installed by manufacturer's representatives, submit documentation with subsequent sundry.
    b. If the welding is performed by a third party, the manufacturer's representative shall monitor the temperature to verify that it does not exceed the maximum temperature of the seal.
    c. Manufacturer representative shall install the test plug for the initial BOP test.
    d. If the cement does not circulate and one inch operations would have been possible with a standard wellhead, the well head shall be cut off, cementing operations performed and another wellhead installed.
    e. Whenever any seal subject to test pressure is broken, all the tests in OOGO2.III.A.2.i must be followed.

D. SPECIAL REQUIREMENT (S)

<u>Communitization Agreement</u>

- The operator will submit a Communitization Agreement to the Santa Fe Office, 301 Dinosaur Trail Santa Fe, New Mexico 87508, at least 90 days before the anticipated date of first production from a well subject to a spacing order issued by the New Mexico Oil Conservation Division. The Communitization Agreement will include the signatures of all working interest owners in all Federal and Indian leases subject to the Communitization Agreement (i.e., operating rights owners and lessees of record), or certification that the operator has obtained the written signatures of all such owners and will make those signatures available to the BLM immediately upon request.
- If the operator does not comply with this condition of approval, the BLM may take enforcement actions that include, but are not limited to, those specified in 43 CFR 3163.1.
- In addition, the well sign shall include the surface and bottom hole lease numbers. <u>When the Communitization Agreement number is known, it shall also be on the sign.</u>

GENERAL REQUIREMENTS

The BLM is to be notified in advance for a representative to witness:

a. Spudding well (minimum of 24 hours)
b. Setting and/or Cementing of all casing strings (minimum of 4 hours)
c. BOPE tests (minimum of 4 hours)

☒ Eddy County
Call the Carlsbad Field Office, 620 East Greene St., Carlsbad, NM 88220, (575) 361-2822

☒ Lea County
Call the Hobbs Field Station, 414 West Taylor, Hobbs NM 88240, (575) 393-3612

1. Unless the production casing has been run and cemented or the well has been properly plugged, the drilling rig shall not be removed from over the hole without prior approval.

   a. In the event the operator has proposed to drill multiple wells utilizing a skid/walking rig. Operator shall secure the wellbore on the current well, after installing and testing the wellhead, by installing a blind flange of like pressure rating to the wellhead and a pressure gauge that can be monitored while drilling is performed on the other well(s).
   b. When the operator proposes to set surface casing with Spudder Rig
      - Notify the BLM when moving in and removing the Spudder Rig.
      - Notify the BLM when moving in the 2nd Rig. Rig to be moved in within 90 days of notification that Spudder Rig has left the location.
      - BOP/BOPE test to be conducted per Onshore Oil and Gas Order No. 2 as soon as 2nd Rig is rigged up on well.

2. Floor controls are required for 3M or Greater systems. These controls will be on the rig floor, unobstructed, readily accessible to the driller and will be operational at all times during drilling and/or completion activities. Rig floor is defined as the area immediately around the rotary table; the area immediately above the substructure on which the draw works are located, this does not include the dog house or stairway area.

3. The record of the drilling rate along with the GR/N well log run from TD to surface (horizontal well – vertical portion of hole) shall be submitted to the BLM office as well as all other logs run on the borehole 30 days from completion. If available, a digital copy of the logs is to be submitted in addition to the paper copies. The Rustler top and top and bottom of Salt are to be recorded on the Completion Report.

A. CASING

1. Changes to the approved APD casing program need prior approval if the items substituted are of lesser grade or different casing size or are Non-API. The Operator can exchange the components of the proposal with that of superior strength (i.e. changing from J-55 to N-80, or from 36# to 40#). Changes to the approved cement program need prior approval if the altered cement plan has less volume or strength or if the changes are substantial (i.e. Multistage tool, ECP, etc.). The initial wellhead installed on the well will remain on the well with spools used as needed.

2. Wait on cement (WOC) for Potash Areas: After cementing but before commencing any tests, the casing string shall stand cemented under pressure until both of the following conditions have been met: 1) cement reaches a minimum compressive strength of 500 psi for all cement blends, 2) until cement has been in place at least 24 hours. WOC time will be recorded in the driller's log. The casing intergrity test can be done (prior to the cement setting up) immediately after bumping the plug.

3. Wait on cement (WOC) for Water Basin: After cementing but before commencing any tests, the casing string shall stand cemented under pressure until both of the following conditions have been met: 1) cement reaches a minimum compressive strength of 500 psi at the shoe, 2) until cement has been in place at least 8 hours. WOC time will be recorded in the driller's log. See individual casing strings for details regarding lead cement slurry requirements. The casing intergrity test can be done (prior to the cement setting up) immediately after bumping the plug.

4. Provide compressive strengths including hours to reach required 500 pounds compressive strength prior to cementing each casing string. Have well specific cement details onsite prior to pumping the cement for each casing string.

5. No pea gravel permitted for remedial or fall back remedial without prior authorization from the BLM engineer.

6. On that portion of any well approved for a 5M BOPE system or greater, a pressure integrity test of each casing shoe shall be performed. Formation at the shoe shall be tested to a minimum of the mud weight equivalent anticipated to control the formation pressure to the next casing depth or at total depth of the well. This test shall be performed before drilling more than 20 feet of new hole.

7. If hardband drill pipe is rotated inside casing, returns will be monitored for metal. If metal is found in samples, drill pipe will be pulled and rubber protectors which have a larger diameter than the tool joints of the drill pipe will be installed prior to continuing drilling operations.
8. Whenever a casing string is cemented in the R-111-P potash area, the NMOCD requirements shall be followed.

B. PRESSURE CONTROL

1. All blowout preventer (BOP) and related equipment (BOPE) shall comply with well control requirements as described in Onshore Oil and Gas Order No. 2 and API RP 53 Sec. 17.

2. If a variance is approved for a flexible hose to be installed from the BOP to the choke manifold, the following requirements apply: The flex line must meet the requirements of API 16C. Check condition of flexible line from BOP to choke manifold, replace if exterior is damaged or if line fails test. Line to be as straight as possible with no hard bends and is to be anchored according to Manufacturer's requirements. The flexible hose can be exchanged with a hose of equal size and equal or greater pressure rating. Anchor requirements, specification sheet and hydrostatic pressure test certification matching the hose in service, to be onsite for review. These documents shall be posted in the company man's trailer and on the rig floor.

3. 5M or higher system requires an HCR valve, remote kill line and annular to match. The remote kill line is to be installed prior to testing the system and tested to stack pressure.

4. If the operator has proposed a multi-bowl wellhead assembly in the APD. The following requirements must be met:

    a. Wellhead shall be installed by manufacturer's representatives, submit documentation with subsequent sundry.
    b. If the welding is performed by a third party, the manufacturer's representative shall monitor the temperature to verify that it does not exceed the maximum temperature of the seal.
    c. Manufacturer representative shall install the test plug for the initial BOP test.
    d. Whenever any seal subject to test pressure is broken, all the tests in OOGO2.III.A.2.i must be followed.
    e. If the cement does not circulate and one inch operations would have been possible with a standard wellhead, the well head shall be cut off, cementing operations performed and another wellhead installed.

5. The appropriate BLM office shall be notified a minimum of **4** hours in advance for a representative to witness the tests.

    a. In a water basin, for all casing strings utilizing slips, these are to be set as soon as the crew and rig are ready and any fallback cement remediation has been done. The casing cut-off and BOP installation can be initiated four hours after installing the slips, which will be approximately six hours after bumping the plug. For those casing strings not using slips, the minimum wait time before cut-off is eight hours after bumping the plug. BOP/BOPE testing can begin after cut-off or once cement reaches 500 psi compressive strength (including

lead when specified), whichever is greater. However, if the float does not hold, cut-off cannot be initiated until cement reaches 500 psi compressive strength (including lead when specified).

b. In potash areas, for all casing strings utilizing slips, these are to be set as soon as the crew and rig are ready and any fallback cement remediation has been done. For all casing strings, casing cut-off and BOP installation can be initiated at twelve hours after bumping the plug. However, **no tests** shall commence until the cement has had a minimum of 24 hours setup time, except the casing pressure test can be initiated immediately after bumping the plug (only applies to single stage cement jobs).

c. The tests shall be done by an independent service company utilizing a test plug not a cup or J-packer. The operator also has the option of utilizing an independent tester to test without a plug (i.e. against the casing) pursuant to Onshore Order 2 with the pressure not to exceed 70% of the burst rating for the casing. Any test against the casing must meet the WOC time for water basin (8 hours) or potash (24 hours) or 500 pounds compressive strength, whichever is greater, prior to initiating the test (see casing segment as lead cement may be critical item).

d. The test shall be run on a 5000 psi chart for a 2-3M BOP/BOP, on a 10000 psi chart for a 5M BOP/BOPE and on a 15000 psi chart for a 10M BOP/BOPE. If a linear chart is used, it shall be a one hour chart. A circular chart shall have a maximum 2 hour clock. If a twelve hour or twenty-four hour chart is used, tester shall make a notation that it is run with a two hour clock.

e. The results of the test shall be reported to the appropriate BLM office.

f. All tests are required to be recorded on a calibrated test chart. A copy of the BOP/BOPE test chart and a copy of independent service company test will be submitted to the appropriate BLM office.

g. The BOP/BOPE test shall include a low pressure test from 250 to 300 psi. The test will be held for a minimum of 10 minutes if test is done with a test plug and 30 minutes without a test plug. This test shall be performed prior to the test at full stack pressure.

h. BOP/BOPE must be tested by an independent service company within 500 feet of the top of the Wolfcamp formation if the time between the setting of the intermediate casing and reaching this depth exceeds 20 days. This test does not exclude the test prior to drilling out the casing shoe as per Onshore Order No. 2.

C. DRILLING MUD

Mud system monitoring equipment, with derrick floor indicators and visual and audio alarms, shall be operating before drilling into the Wolfcamp formation, and shall be used until production casing is run and cemented.

D. WASTE MATERIAL AND FLUIDS

All waste (i.e. drilling fluids, trash, salts, chemicals, sewage, gray water, etc.) created as a result of drilling operations and completion operations shall be safely contained and disposed of properly at a waste disposal facility. No waste material or fluid shall be disposed of on the well location or surrounding area.

Porto-johns and trash containers will be on-location during fracturing operations or any other crew-intensive operations.

YJ (03/27/2020)

APD Package Report

Date Printed: 04/09/2020 07:03 AM

APD ID:	10400047745	Well Status:	AAPD
APD Received Date:	09/30/2019 04:56 PM	Well Name:	DOS EQUIS 11-14 FEDERAL
Operator:	CIMAREX ENERGY COMPANY	Well Number:	63H

APD Package Report Contents

- Form 3160-3 : Error Generating Form

- Operator Certification Report

- Application Report
- Application Attachments
  -- Well Plat: 1 file(s)

- Drilling Plan Report
- Drilling Plan Attachments
  -- Blowout Prevention Choke Diagram Attachment: 2 file(s)
  -- Blowout Prevention BOP Diagram Attachment: 2 file(s)
  -- Casing Spec Documents: 1 file(s)
  -- Casing Design Assumptions and Worksheet(s): 4 file(s)
  -- Hydrogen sulfide drilling operations plan: 1 file(s)
  -- Proposed horizontal/directional/multi-lateral plan submission: 2 file(s)
  -- Other Facets: 3 file(s)
  -- Other Variances: 2 file(s)

- SUPO Report
- SUPO Attachments
  -- Existing Road Map: 1 file(s)
  -- New Road Map: 1 file(s)
  -- Attach Well map: 1 file(s)
  -- Production Facilities map: 4 file(s)
  -- Water source and transportation map: 1 file(s)
  -- Well Site Layout Diagram: 2 file(s)
  -- Recontouring attachment: 1 file(s)
  -- Other SUPO Attachment: 4 file(s)

- PWD Report
- PWD Attachments
  -- None

CONFIDENTIAL

- Bond Report
- Bond Attachments
    -- None

Operator Certification

I hereby certify that I, or someone under my direct supervision, have inspected the drill site and access route proposed herein; that I am familiar with the conditions which currently exist; that I have full knowledge of state and Federal laws applicable to this operation; that the statements made in this APD package are, to the best of my knowledge, true and correct; and that the work associated with the operations proposed herein will be performed in conformity with this APD package and the terms and conditions under which it is approved. I also certify that I, or the company I represent, am responsible for the operations conducted under this application. These statements are subject to the provisions of 18 U.S.C. 1001 for the filing of false statements.

NAME: Amithy Crawford **Signed on:** 09/17/2019

Title: Regulatory Analyst

Street Address: 600 N MARIENFELD STE 600

City: MIDLAND **State:** TX **Zip:** 79701

Phone: (432)620-1909

Email address: acrawford@cimarex.com

Field Representative

Representative Name:

Street Address:

City: **State:** **Zip:**

Phone: (432)620-1909

Email address: acrawford@cimarex.com

APD ID: 10400047745 **Submission Date:** 09/30/2019

Operator Name: CIMAREX ENERGY COMPANY

Well Name: DOS EQUIS 11-14 FEDERAL COM **Well Number:** 63H

Well Type: OIL WELL **Well Work Type:** Drill

Highlighted data reflects the most recent changes

Show Final Text

Section 1 - General

APD ID: 10400047745 **Tie to previous NOS?** Y **Submission Date:** 09/30/2019

BLM Office: CARLSBAD **User:** Amithy Crawford **Title:** Regulatory Analyst

Federal/Indian APD: FED **Is the first lease penetrated for production Federal or Indian?** FED

Lease number: NMNM0002889 **Lease Acres:** 680

Surface access agreement in place? **Allotted?** **Reservation:**

Agreement in place? NO **Federal or Indian agreement:**

Agreement number:

Agreement name:

Keep application confidential? Y

Permitting Agent? NO **APD Operator:** CIMAREX ENERGY COMPANY

Operator letter of designation:

Operator Info

Operator Organization Name: CIMAREX ENERGY COMPANY

Operator Address: 600 N. Marienfeld St., Suite 600

Zip: 79701

Operator PO Box:

Operator City: Midland **State:** TX

Operator Phone: (432)620-1936

Operator Internet Address: tstathem@cimarex.com

Section 2 - Well Information

Well in Master Development Plan? NO **Master Development Plan name:**

Well in Master SUPO? NO **Master SUPO name:**

Well in Master Drilling Plan? NO **Master Drilling Plan name:**

Well Name: DOS EQUIS 11-14 FEDERAL COM **Well Number:** 63H **Well API Number:**

Field/Pool or Exploratory? Field and Pool **Field Name:** WC-025 G-08 S243213C; WOLFCAMP **Pool Name:** WC-025 G-08 S243213C; WOLFCAMP

Is the proposed well in an area containing other mineral resources? USEABLE WATER,NATURAL GAS,OIL

CONFIDENTIAL

Operator Name: CIMAREX ENERGY COMPANY

Well Name: DOS EQUIS 11-14 FEDERAL COM **Well Number:** 63H

Is the proposed well in an area containing other mineral resources? USEABLE WATER,NATURAL GAS,OIL

Is the proposed well in a Helium production area? N **Use Existing Well Pad?** N **New surface disturbance?**

Type of Well Pad: MULTIPLE WELL **Multiple Well Pad Name:** Dos Equis Fed Com **Number:** E2E2

Well Class: HORIZONTAL **Number of Legs:** 1

Well Work Type: Drill

Well Type: OIL WELL

Describe Well Type:

Well sub-Type: INFILL

Describe sub-type:

Distance to town: 28 Miles **Distance to nearest well:** 20 FT **Distance to lease line:** 384 FT

Reservoir well spacing assigned acres Measurement: 320 Acres

Well plat: Dos_Equis_11_14_Federal_Com_63H_C102_20190920082718.pdf

Well work start Date: 02/29/2020 **Duration:** 30 DAYS

Section 3 - Well Location Table

Survey Type: RECTANGULAR

Describe Survey Type:

Datum: NAD83 **Vertical Datum:** NAVD88

Survey number: **Reference Datum:** GROUND LEVEL

Wellbore	NS-Foot	NS Indicator	EW-Foot	EW Indicator	Twsp	Range	Section	Aliquot/Lot/Tract	Latitude	Longitude	County	State	Meridian	Lease Type	Lease Number	Elevation	MD	TVD	Will this well produce from this lease?
SHL Leg #1	384	FNL	1176	FEL	24S	32E	11	Aliquot NENE	32.238376	-103.640618	LEA	NEW MEXICO	NEW MEXICO	F	NMNM 0002889	3601	0	0	Y
KOP Leg #1	384	FNL	1176	FEL	24S	32E	11	Aliquot NENE	32.238376	-103.640618	LEA	NEW MEXICO	NEW MEXICO	F	NMNM 0002889	-8141	11742	11742	Y
PPP Leg #1-1	1152	FNL	1356	FEL	24S	32E	11	Aliquot NWNE	32.236267	-103.641208	LEA	NEW MEXICO	NEW MEXICO	F	NMNM 0002889	-8739	12884	12340	Y

CONFIDENTIAL

Operator Name: CIMAREX ENERGY COMPANY

Well Name: DOS EQUIS 11-14 FEDERAL COM **Well Number:** 63H

Wellbore	NS-Foot	NS Indicator	EW-Foot	EW Indicator	Twsp	Range	Section	Aliquot/Lot/Tract	Latitude	Longitude	County	State	Meridian	Lease Type	Lease Number	Elevation	MD	TVD	Will this well produce from this lease?
PPP Leg #1-2	2642	FNL	1356	FEL	24S	32E	11	Aliquot NWSE	32.232169	-103.641211	LEA	NEW MEXICO	NEW MEXICO	F	NMNM 0001917	-8732	14374	12333	Y
EXIT Leg #1	100	FSL	1356	FEL	24S	32E	14	Aliquot SWSE	32.210666	-103.641223	LEA	NEW MEXICO	NEW MEXICO	F	NMNM 0033503	-8699	22198	12300	Y
BHL Leg #1	100	FSL	1356	FEL	24S	32E	14	Aliquot SWSE	32.21066	-103.641223	LEA	NEW MEXICO	NEW MEXICO	F	NMNM 0033503	-8699	22198	12300	Y

CONFIDENTIAL

APD ID: 10400047745

Submission Date: 09/30/2019

Operator Name: CIMAREX ENERGY COMPANY

Well Name: DOS EQUIS 11-14 FEDERAL COM

Well Number: 63H

Well Type: OIL WELL

Well Work Type: Drill

Highlighted data reflects the most recent changes

Show Final Text

Section 1 - Geologic Formations

Formation ID	Formation Name	Elevation	True Vertical Depth	Measured Depth	Lithologies	Mineral Resources	Producing Formation
543050	RUSTLER	3603	1166	1166	LIMESTONE	USEABLE WATER	N
543051	SALADO	2213	1390	1390	ANHYDRITE	NONE	N
543052	BASE OF SALT	-1081	4684	4704	ANHYDRITE	NONE	N
543053	LAMAR	-1307	4910	4933	SANDSTONE	NONE	N
543054	BELL CANYON	-1362	4965	4988	SANDSTONE	NONE	N
543055	CHERRY CANYON	-2255	5858	5891	SANDSTONE	NONE	N
543056	BRUSHY CANYON	-3619	7222	7269	SANDSTONE	NATURAL GAS, OIL	N
543057	BONE SPRING	-5176	8779	8836	LIMESTONE	NATURAL GAS, OIL	N
543058	AVALON SAND	-5616	9219	9276	SHALE	NATURAL GAS, OIL	N
543059	BONE SPRING 1ST	-6341	9944	10000	SANDSTONE	NATURAL GAS, OIL	N
543060	BONE SPRING 2ND	-6505	10108	10165	LIMESTONE	NATURAL GAS, OIL	N
543061	BONE SPRING 3RD	-7433	11036	11093	LIMESTONE	NATURAL GAS, OIL	N
543062	WOLFCAMP	-8625	12228	12357	SANDSTONE	NATURAL GAS, OIL	Y

Section 2 - Blowout Prevention

CONFIDENTIAL

Operator Name: CIMAREX ENERGY COMPANY

Well Name: DOS EQUIS 11-14 FEDERAL COM **Well Number:** 63H

Pressure Rating (PSI): 10M **Rating Depth:** 22198

Equipment: A BOP consisting of three rams, including one blind ram and two pipe rams and one annular preventer. An accumulator that meets the requirements in Onshore Order #2 for the pressure rating of the BOP stack. A rotating head may be installed as needed. A Kelly clock will be installed and maintained in operable condition and a drill string safety valve in the open position will be available on the rig floor.
Requesting Variance? YES

Variance request: Co-flex line between the BOP and choke manifold. Certification for proposed co-flex hose is attached. The hose is not required by the manufacturer to be anchored. In the event the specific hose is not available, one of equal or higher rating will be used. Variance to include Hammer Union connections on lines downstream of the buffer tank only. Cimarex requests a 5M annular variance for the 10M BOP system. See attached procedure
Testing Procedure: A multi-bowl wellhead system will be utilized. After running the 10-3/4" surface casing, a 13 5/8 BOP/BOPE system with a minimum working pressure of 10000 psi will be installed on the wellhead system and will be pressure tested to 250 psi low followed by a 10000 psi test. Annular will be tested to 50% of working pressure. The pressure test will be repeated at least every 30 days, as per Onshore Order No. 2. The multi-bowl wellhead will be installed by vendors representative. A copy of the installation instructions has been sent to the BLM field office. The wellhead will be installed by a third-party welder while being monitored by the wellhead vendor representative. All BOP equipment will be tested utilizing a conventional test plug. Not a cup or J-packer type. A solid steel body pack-off will be utilized after running and cementing the intermediate casing. After installation the pack-off and lower flange will be pressure tested to 10000 psi. The surface casing string will be tested as per Onshore Order No. 2 to at least 0.22 psi/ft or 1500 psi, whichever is greater. The casing string utilizing steel body pack-off will be tested to 70% of casing burst. If well conditions dictate conventional slips will be set and BOPE will be tested to appropriate pressures based on permitted pressure requirements.
Choke Diagram Attachment:

Dos_Equis_11_14_Fed_com_63H_10M_Choke_20190920090727.pdf

BOP Diagram Attachment:

Dos_Equis_11_14_Fed_Com_63H_10M_BOP_20190920090735.pdf

Pressure Rating (PSI): 5M **Rating Depth:** 1216

Equipment: A BOP consisting of three rams, including one blind ram and two pipe rams and one annular preventer. An accumulator that meets the requirements in Onshore Order #2 for the pressure rating of the BOP stack. A rotating head may be installed as needed. A Kelly clock will be installed and maintained in operable condition and a drill string safety valve in the open position will be available on the rig floor.
Requesting Variance? YES

Variance request: Co-flex line between the BOP and choke manifold. Certification for proposed co-flex hose is attached. The hose is not required by the manufacturer to be anchored. In the event the specific hose is not available, one of equal or higher rating will be used. Variance to include Hammer Union connections on lines downstream of the buffer tank only. Cimarex requests a 5M annular variance for the 10M BOP system. See attached procedure.
Testing Procedure: A multi-bowl wellhead system will be utilized. After running the 10-3/4" surface casing, a 13 5/8 BOP/BOPE system with a minimum working pressure of 5000 psi will be installed on the wellhead system and will be pressure tested to 250 psi low followed by a 5000 psi test. Annular will be tested to 50% of working pressure. The pressure test will be repeated at least every 30 days, as per Onshore Order No. 2. The multi-bowl wellhead will be installed by vendors representative. A copy of the installation instructions has been sent to the BLM field office. The wellhead will be installed by a third-party welder while being monitored by the wellhead vendor representative. All BOP equipment will be tested utilizing a conventional test plug. Not a cup or J-packer type. A solid steel body pack-off will be utilized after running and cementing the intermediate casing. After installation the pack-off and lower flange will be pressure tested to 5000 psi. The surface casing string will be tested as per Onshore Order No. 2 to at least 0.22 psi/ft or 1500 psi, whichever is greater. The casing string utilizing steel body pack-off will be tested to 70% of casing burst. If well conditions dictate conventional slips will be set and BOPE will be tested to appropriate pressures based on permitted pressure requirements.
Choke Diagram Attachment:

Operator Name: CIMAREX ENERGY COMPANY

Well Name: DOS EQUIS 11-14 FEDERAL COM **Well Number:** 63H

Dos_Equis_11_14_Fed_Com_63H_5M_Choke_20190920090651.pdf

BOP Diagram Attachment:

Dos_Equis_11_14_Fed_Com_63H_5M_BOP_20190920090703.pdf

Section 3 - Casing

Casing ID	String Type	Hole Size	Csg Size	Condition	Standard	Tapered String	Top Set MD	Bottom Set MD	Top Set TVD	Bottom Set TVD	Top Set MSL	Bottom Set MSL	Calculated casing length MD	Grade	Weight	Joint Type	Collapse SF	Burst SF	Joint SF Type	Joint SF	Body SF Type	Body SF
1	SURFACE	14.75	10.75	NEW	API	N	0	1216	0	1216	3601	2385	1216	J-55	40.5	BUTT	2.84	5.63	BUOY	12.77	BUOY	12.77
2	PRODUCTION	6.75	5.5	NEW	API	N	0	11742	0	11742	3603	-8141	11742	L-80	20	LT&C	1.16	1.2	BUOY	1.88	BUOY	1.88
3	INTERMEDIATE	9.875	7.625	NEW	NON API	N	0	12503	0	12291	3603	-8690	12503	L-80	29.7	BUTT	2.5	1.2	BUOY	1.82	BUOY	1.82
4	PRODUCTION	6.75	5.0	NEW	API	N	11742	21198	11742	12300	-8141	-8699	9456	P-110	18	BUTT	1.68	1.7	BUOY	57.75	BUOY	57.75

Casing Attachments

Casing ID: 1 **String Type:** SURFACE

Inspection Document:

Spec Document:

Tapered String Spec:

Casing Design Assumptions and Worksheet(s):

Dos_Equis_11_14_Fed_Com_63H_Casing_Assumptions_20190920091927.pdf

CONFIDENTIAL

Operator Name: CIMAREX ENERGY COMPANY

Well Name: DOS EQUIS 11-14 FEDERAL COM **Well Number:** 63H

Casing Attachments

Casing ID: 2 **String Type:** PRODUCTION

Inspection Document:

Spec Document:

Tapered String Spec:

Casing Design Assumptions and Worksheet(s):

Dos_Equis_11_14_Fed_Com_63H_Casing_Assumptions_20190920092138.pdf

Casing ID: 3 **String Type:** INTERMEDIATE

Inspection Document:

Spec Document:

Dos_Equis_11_14_Fed_Com_63H_Casing_Spec_Sheet_20190920092007.pdf

Tapered String Spec:

Casing Design Assumptions and Worksheet(s):

Dos_Equis_11_14_Fed_Com_63H_Casing_Assumptions_20190920092020.pdf

Casing ID: 4 **String Type:** PRODUCTION

Inspection Document:

Spec Document:

Tapered String Spec:

Casing Design Assumptions and Worksheet(s):

Dos_Equis_11_14_Fed_Com_63H_Casing_Assumptions_20190920092239.pdf

Section 4 - Cement

CONFIDENTIAL

Operator Name: CIMAREX ENERGY COMPANY

Well Name: DOS EQUIS 11-14 FEDERAL COM **Well Number:** 63H

String Type	Lead/Tail	Stage Tool Depth	Top MD	Bottom MD	Quantity(sx)	Yield	Density	Cu Ft	Excess%	Cement type	Additives
SURFACE	Lead		0	1216	472	1.72	13.5	811	50	Class C	Bentonite
SURFACE	Tail		0	1216	127	1.34	14.8	169	25	Class C	LCM
INTERMEDIATE	Lead		0	12503	584	3.64	10.3	2125	50	Tuned Light	LCM
INTERMEDIATE	Tail		0	12503	198	1.36	14.8	268	25	Class C	Retarder
INTERMEDIATE	Lead	4910	0	12503	785	1.88	12.9	1475	50	35:65 (POZ C)	Salt, Bentonite
PRODUCTION	Lead		0	22198	840	1.3	14.2	1092	25	50:50 POZ H	Salt, Bentonite, Fluid Loss, Dispersant, SMS
PRODUCTION	Lead		0	22198	840	1.3	14.2	1092	25	50:50 POZ H	Salt, Bentonite, Fluid Loss, Dispersant, SMS

Section 5 - Circulating Medium

Mud System Type: Closed

Will an air or gas system be Used? NO

Description of the equipment for the circulating system in accordance with Onshore Order #2:

Diagram of the equipment for the circulating system in accordance with Onshore Order #2:

Describe what will be on location to control well or mitigate other conditions: Sufficient mud materials will be kept on location at all times in order to combat lost circulation or unexpected kicks. In order to run DSTs, open hole logs, and casing, the viscosity and water loss may have to be adjusted in order to meet these needs

Describe the mud monitoring system utilized: PVT/Pason/Visual Monitoring

Circulating Medium Table

CONFIDENTIAL

Operator Name: CIMAREX ENERGY COMPANY

Well Name: DOS EQUIS 11-14 FEDERAL COM **Well Number:** 63H

Top Depth	Bottom Depth	Mud Type	Min Weight (lbs/gal)	Max Weight (lbs/gal)	Density (lbs/cu ft)	Gel Strength (lbs/100 sqft)	PH	Viscosity (CP)	Salinity (ppm)	Filtration (cc)	Additional Characteristics
0	1216	SPUD MUD	8.3	8.8							
1216	12503	OTHER : The Brine Emulsion is completely saturated brine fluid that ties diesel into itself to lower the weight of the fluid. The drilling fluid is completely salt saturated.	8.5	9							
12503	22198	OIL-BASED MUD	12	12.5							

Section 6 - Test, Logging, Coring

List of production tests including testing procedures, equipment and safety measures:

No DST Planned

List of open and cased hole logs run in the well:

GAMMA RAY LOG,COMPENSATED NEUTRON LOG,DIRECTIONAL SURVEY,

Coring operation description for the well:

N/A

Section 7 - Pressure

Anticipated Bottom Hole Pressure: 7995 **Anticipated Surface Pressure:** 5280

Anticipated Bottom Hole Temperature(F): 171

Anticipated abnormal pressures, temperatures, or potential geologic hazards? YES

Describe:

Lost circulation may be encountered in the Delaware mountain group. Abnormal pressure as well as hole stability issues may be encountered in the Wolfcamp

Contingency Plans geoharzards description:

Lost circulation material will be available, as well as additional drilling fluid along with the fluid volume in the drilling rig pit system. Drilling fluid can be mixed on location or mixed in vendor mud plant and trucked to location if needed. Sufficient barite will be available to maintain appropriate mud weight for the Wolfcamp interval.

Contingency Plans geohazards attachment:

CONFIDENTIAL

Hydrogen Sulfide drilling operations plan required? YES

Hydrogen sulfide drilling operations plan:

Dos_Equis_11_14_Fed_Com_63H_H2S_Plan_20190920093826.pdf

Section 8 - Other Information

Proposed horizontal/directional/multi-lateral plan submission:

Dos_Equis_11_14_Fed_Com_63H_AC_Report_20190920093854.pdf

Dos_Equis_11_14_Fed_Com_63H_Directional_Survey_20200115095814.pdf

Other proposed operations facets description:

Cimarex requests a 5M annular variance for the 10M BOP system. See attached procedure

Other proposed operations facets attachment:

Dos_Equis_11_14_Fed_Com_63H_Flex_Hose_20190920093930.pdf

Dos_Equis_11_14_Fed_Com_63H_Gas_Capture_Plan_20190920093934.pdf

Dos_Equis_11_14_Federal_Com_63H_Drilling_Plan_20190920094021.pdf

Other Variance attachment:

Dos_Equis_11_14_Fed_Com_63H_10M_5M_Annular_Well_Control_20190920094030.pdf

Dos_Equis_11_14_Fed_Com_63H_Multibowl_Wellhead_20200218135303.pdf

CONFIDENTIAL

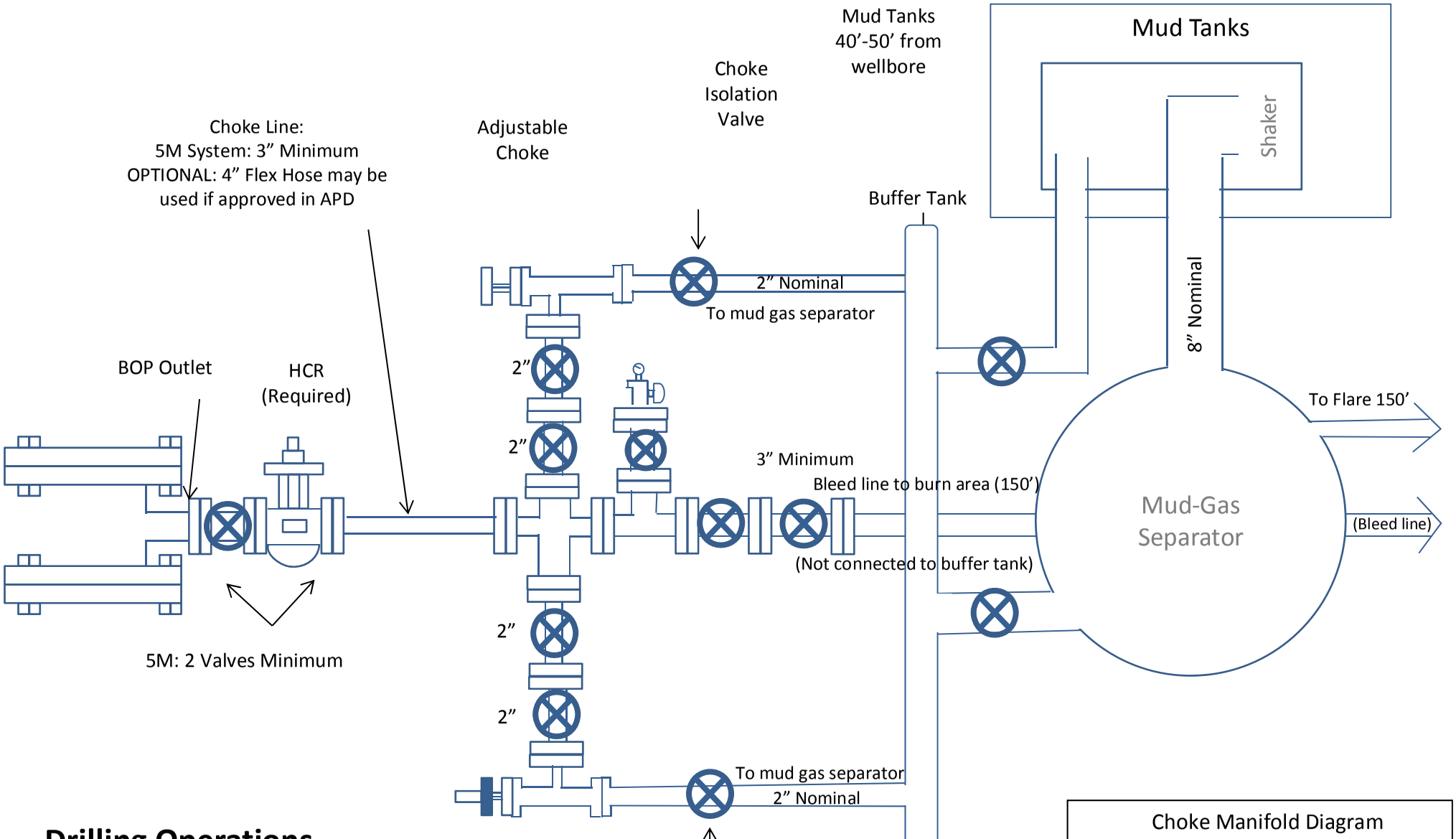

Drilling Operations
Choke Manifold
5M Service

Choke Manifold Diagram
Dos Equis 11-14 Fed Com 63H
Cimarex Energy Co.
11-24S-32E
Lea County, NM

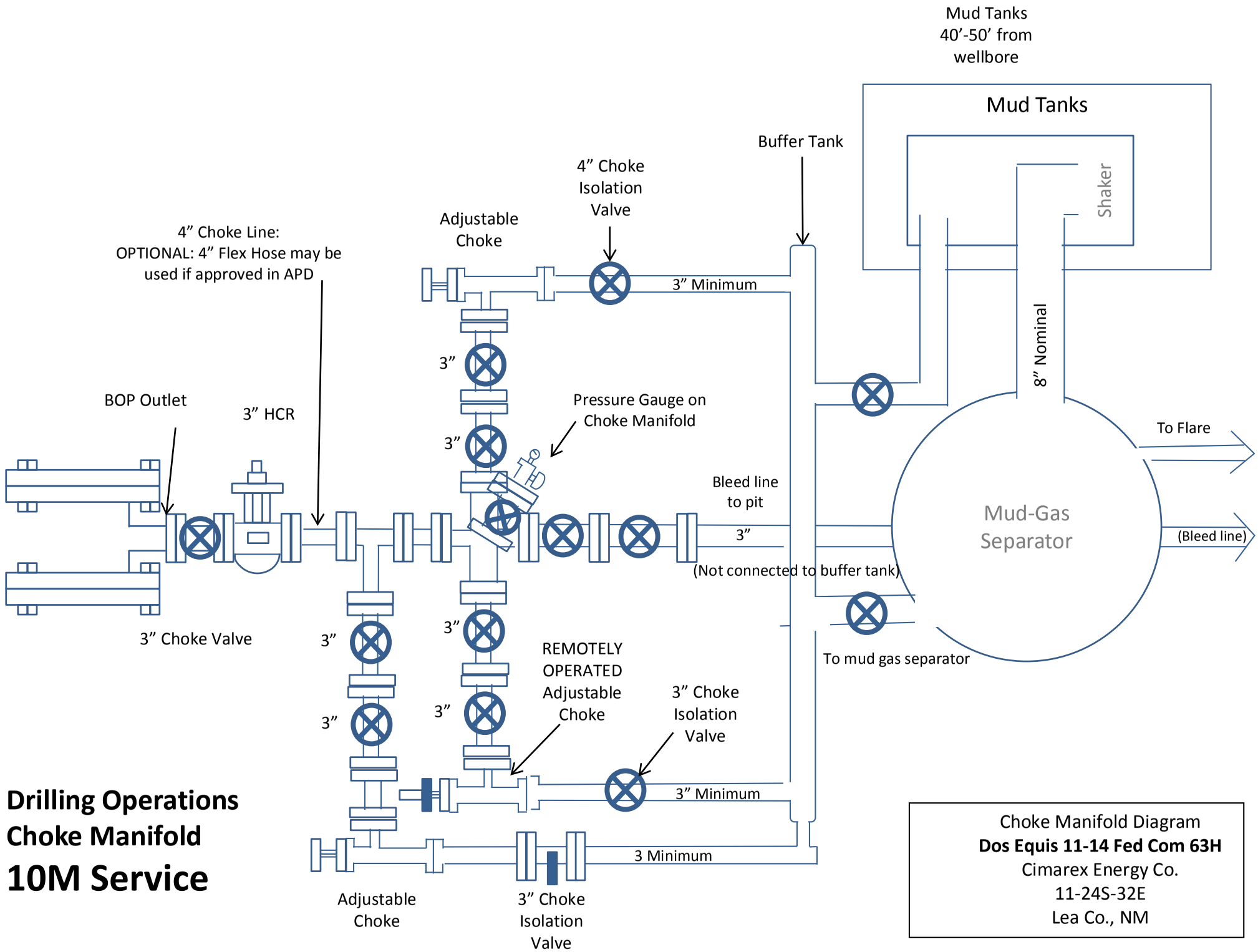

Drilling Operations
Choke Manifold
10M Service

Choke Manifold Diagram
Dos Equis 11-14 Fed Com 63H
Cimarex Energy Co.
11-24S-32E
Lea Co., NM

Drilling 9 7/8” hole below 10 3/4” Casing

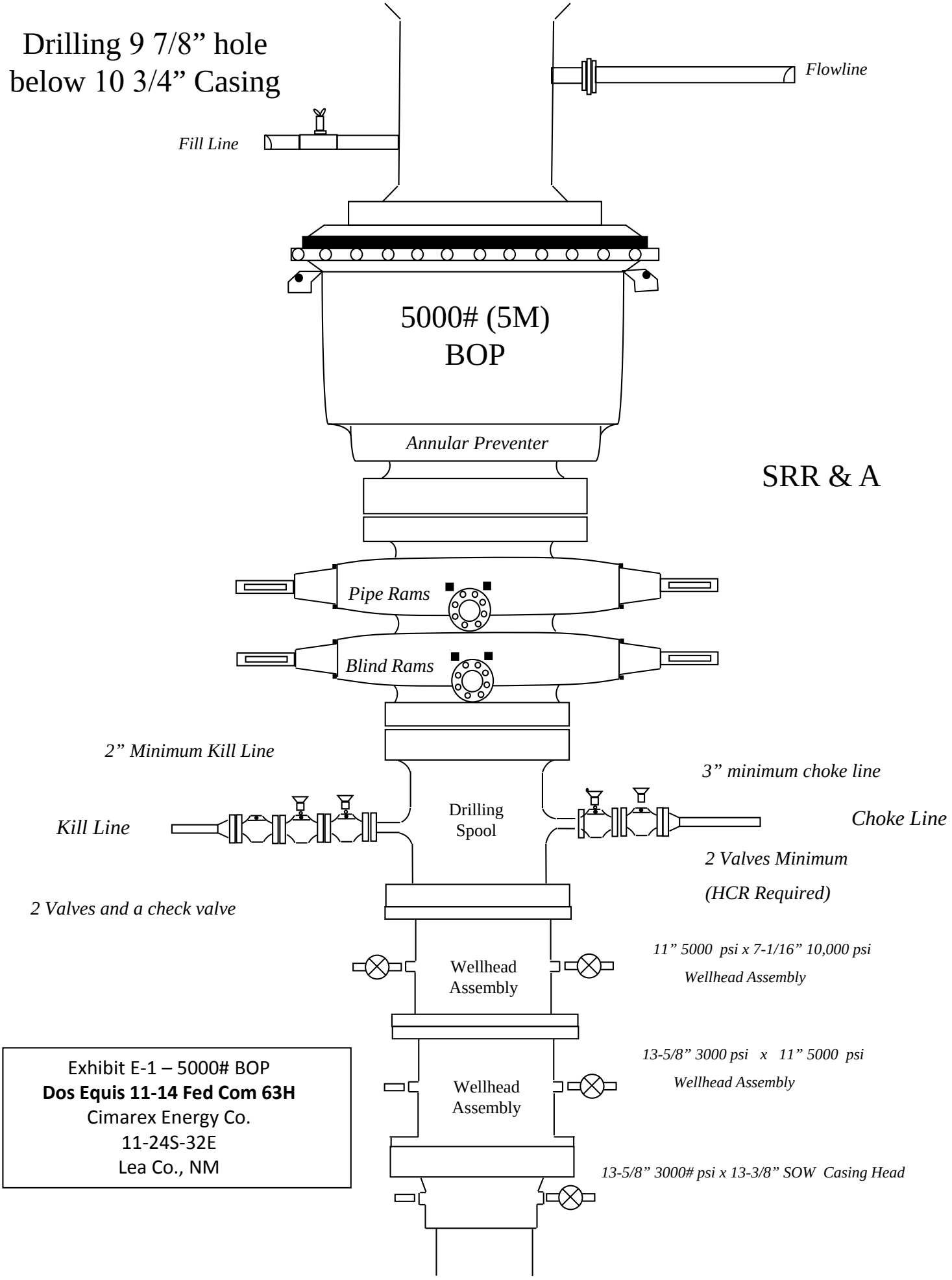

Exhibit E-1 – 5000# BOP
Dos Equis 11-14 Fed Com 63H
Cimarex Energy Co.
11-24S-32E
Lea Co., NM

Drilling 6 3/4" Hole
Below 7 5/8" Casing

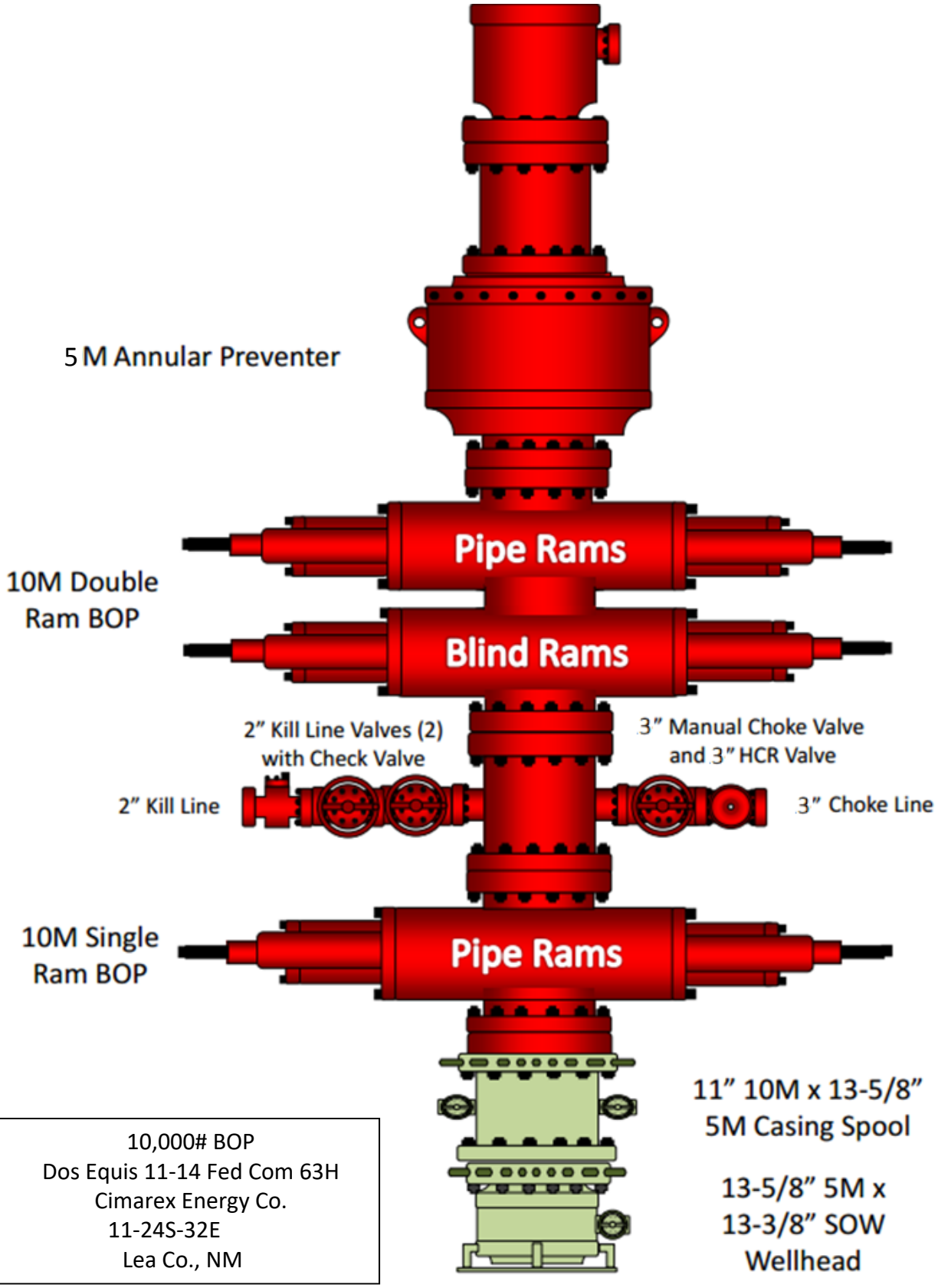

10,000# BOP
Dos Equis 11-14 Fed Com 63H
Cimarex Energy Co.
11-24S-32E
Lea Co., NM

Hydrogen Sulfide Drilling Operations Plan

Dos Equis 11-14 Fed Com 63H

Cimarex Energy Co.

UL: A, Sec. 11, 24S, 32E

Lea Co., NM

1 All Company and Contract personnel admitted on location must be trained by a qualified H2S safety instructor to the following:

A. Characteristics of H_2S
B. Physical effects and hazards
C. Principal and operation of H2S detectors, warning system and briefing areas.
D. Evacuation procedure, routes and first aid.
E. Proper use of safety equipment & life support systems
F. Essential personnel meeting Medical Evaluation criteria will receive additional training on the proper use of 30 minute pressure demand air packs.

H_2S Detection and Alarm Systems:

A. H2S sensors/detectors to be located on the drilling rig floor, in the base of the sub structure/cellar area, on the mud pits in the shale shaker area. Additional H2S detectors may play placed as deemed necessary.

B. An audio alarm system will be installed on the derrick floor and in the top doghouse.

3 Windsock and/or wind streamers:

A. Windsock at mudpit area should be high enough to be visible.

B. Windsock on the rig floor and / or top doghouse should be high enough to be visible.

4 Condition Flags and Signs

A. Warning sign on access road to location.
B. Flags to be displayed on sign at entrance to location. Green flag indicates normal safe condition. Yellow flag indicates potential pressure and danger. Red flag indicates danger (H_2S present in dangerous concentration). Only H2S trained and certified personnel admitted to location.

5 Well control equipment:

A. See exhibit "E-1"

6 Communication:

A. While working under masks chalkboards will be used for communication.
B. Hand signals will be used where chalk board is inappropriate.
C. Two way radio will be used to communicate off location in case of emergency help is required. In most cases cellular telephones will be available at most drilling foreman's trailer or living quarters.

7 Drillstem Testing:

No DSTs r cores are planned at this time.

8 Drilling contractor supervisor will be required to be familiar with the effects H_2S has on tubular goods and other mechanical equipment.

9 If H2S is encountered, mud system will be altered if necessary to maintain control of formation. A mud gas separator will be brought into service along with H2S scavengers if necessary.

H_2S Contingency Plan
Dos Equis 11-14 Fed Com 63H
Cimarex Energy Co.
UL: A, Sec. 11, 24S, 32E Lea Co., NM

Emergency Procedures

In the event of a release of gas containing H_2S, the first responder(s) must:

« Isolate the area and prevent entry by other persons into the 100 ppm ROE.
« Evacuate any public places encompassed by the 100 ppm ROE.
« Be equipped with H_2S monitors and air packs in order to control the release.
« Use the "buddy system" to ensure no injuries occur during the 432-620-1975
« Take precautions to avoid personal injury during this operation.
« Contact operator and/or local officials to aid in operation. See list of phone numbers attached.
« Have received training in the:
  · Detection of H_2S, and
  · Measures for protection against the gas,
  · Equipment used for protection and emergency response.

Ignition of Gas Source

Should control of the well be considered lost and ignition considered, take care to protect against exposure to Sulfur Dioxide (SO_2). Intentional ignition must be coordinated with the NMOCD and local officials. Additionally, the NM State Police may become involved. NM State Police shall be the Incident Command on scene of any major release. Take care to protect downwind whenever there is an ignition of the gas.

Characteristics of H_2S and SO_2

Please see attached International Chemical Safety Cards.

Contacting Authorities

Cimarex Energy Co. of Colorado's personnel must liaise with local and state agencies to ensure a proper response to a major release. Additionally, the OCD must be notified of the release as soon as possible but no later than 4 hours. Agencies will ask for information such as type and volume of release, wind direction, location of release, etc. Be prepared with all information available including directions to site. The following call list of essential and potential responders has been prepared for use during a release. Cimarex Energy Co. of Colorado's response must be in coordination with the State of New Mexico's "Hazardous Materials Emergency Response Plan" (HMER).

H_2S Contingency Plan Emergency Contacts
Dos Equis 11-14 Fed Com 63H
Cimarex Energy Co.
UL: A, Sec. 11, 24S, 32E
Lea Co., NM

Company Office

Cimarex Energy Co. of Colorado Co. Office and After-Hours Menu	800-969-4789

Key Personnel

Name	Title	Office	Mobile
Larry Seigrist	Drilling Manager	432-620-1934	580-243-8485
Charlie Pritchard	Drilling Superintendent	432-620-1975	432-238-7084
Roy Shirley	Construction Superintendent		432-634-2136

Artesia

Ambulance	911
State Police	575-746-2703
City Police	575-746-2703
Sheriff's Office	575-746-9888
Fire Department	**575-746-2701**
Local Emergency Planning Committee	575-746-2122
New Mexico Oil Conservation Division	575-748-1283

Carlsbad

Ambulance	911
State Police	575-885-3137
City Police	575-885-2111
Sheriff's Office	575-887-7551
Fire Department	**575-887-3798**
Local Emergency Planning Committee	575-887-6544
US Bureau of Land Management	575-887-6544

Santa Fe

New Mexico Emergency Response Commission (Santa Fe)	505-476-9600
New Mexico Emergency Response Commission (Santa Fe) 24 Hrs	505-827-9126
New Mexico State Emergency Operations Center	505-476-9635

National

National Emergency Response Center (Washington, D.C.)	800-424-8802

Medical

Flight for Life - 4000 24th St.; Lubbock, TX	806-743-9911
Aerocare - R3, Box 49F; Lubbock, TX	806-747-8923
Med Flight Air Amb - 2301 Yale Blvd S.E., #D3; Albuquerque, NM	505-842-4433
SB Air Med Service - 2505 Clark Carr Loop S.E.; Albuquerque, NM	505-842-4949

Other

Boots & Coots IWC	800-256-9688	or	281-931-8884
Cudd Pressure Control	432-699-0139	or	432-563-3356
Halliburton	575-746-2757		
B.J. Services	575-746-3569		

Schlumberger

CIMAREX

Cimarex Dos Equis 11-14 Federal Com 63H Rev0 RM 26Aug19 Anti-Collision Summary Report

Analysis Date-24hr Time:	August 27, 2019 - 13:13	**Analysis Method:**	3D Least Distance
Client:	Cimarex Energy	**Reference Trajectory:**	Cimarex Dos Equis 11-14 Federal Com 63H Rev0 RM 26Aug19 (Non-Def Plan)
Field:	NM Lea County (NAD 83)	**Depth Interval:**	Every 10.00 Measured Depth (ft)
Structure:	Cimarex Dos Equis 11-14 Federal Com 63H	**Rule Set:**	NAL Procedure: D&M AntiCollision Standard S002
Slot:	New Slot	**Min Pts:**	All local minima indicated.
Well:	Dos Equis 11-14 Federal Com 63H	**Version / Patch:**	2.10.760.0
Borehole:	Dos Equis 11-14 Federal Com 63H	**Database \ Project:**	US1153APP452.dir.slb.com\drilling-NM Lea County 2.10
Scan MD Range:	0.00ft ~ 22197.55ft		

Trajectory Error Model: ISCWSA0 3-D 95.000% Confidence 2.7955 sigma, for subject well. For offset wells, error model version is specified with each well respectively.

Offset Trajectories Summary

Offset Selection Criteria

Wellhead distance scan: Not performed!

Selection filters: Definitive Surveys - Definitive Plans - Definitive surveys exclude definitive plans
- All Non-Def Surveys when no Def-Survey is set in a borehole - All Non-Def Plans when no Def-Plan is set in a borehole

Offset Trajectory	Separation			Allow	Sep.	Controlling	Reference Trajectory		Risk Level			Alert	Status
	Ct-Ct (ft)	MAS (ft)	EOU (ft)	Dev. (ft)	Fact.	Rule	MD (ft)	TVD (ft)	Alert	Minor	Major		

Results highlighted: Sep-Factor separation <= 1.50 ft

Cimarex Dos Equis 11-14 Federal Com 62H Rev0 RM 23Aug19 (Def Plan)													Fail Minor
	19.99	16.49	17.49	3.50	N/A	MAS = 5.03 (m)	0.00	0.00	CtCt<=15m<15.00			Enter Alert	
	19.99	16.49	17.49	3.50	78729.07	MAS = 5.03 (m)	26.00	26.00				WRP	
	19.99	20.01	5.82	-0.01	1.50	OSF1.50	1920.00	1920.00		OSF<1.50		Enter Minor	
	19.99	27.26	0.98	-7.27	1.06	OSF1.50	2690.00	2690.00				MinPt-CtCt	
	20.01	27.43	0.89	-7.42	1.05	OSF1.50	2710.00	2710.00				MinPts	
	20.06	27.50	0.90	-7.44	1.05	OSF1.50	2720.00	2720.00				MinPt-O-ADP	
	28.38	28.61	8.47	-0.23	1.49	OSF1.50	2920.00	2920.00		OSF>1.50		Exit Minor	
	103.53	32.97	80.72	70.56	4.97	OSF1.50	3660.00	3660.00	OSF>5.00			Exit Alert	
	330.52	100.19	262.89	230.33	5.04	OSF1.50	11742.38	11742.38				MinPts	
	330.57	100.23	262.92	230.34	5.04	OSF1.50	11750.00	11750.00				MinPt-O-SF	
	512.92	94.40	449.16	418.52	8.33	OSF1.50	12860.00	12339.91				MinPt-CtCt	
	512.92	155.78	408.24	357.14	5.00	OSF1.50	16820.00	12323.09	OSF<5.00			Enter Alert	
	512.93	313.67	302.99	199.26	2.46	OSF1.50	22197.55	12300.00				MinPts	
Cimarex Dos Equis 11-14 Federal Com 8H Rev0 RM 22Aug19 (Def Plan)													Warning Alert
	39.99	32.50	37.49	7.50	N/A	MAS = 9.90 (m)	0.00	0.00	CtCt<=15m<15.00			Enter Alert	
	39.99	32.50	37.49	7.50	28125.86	MAS = 9.90 (m)	26.00	26.00				WRP	
	39.99	32.50	22.24	7.50	2.46	MAS = 9.90 (m)	2490.00	2490.00				MinPts	
	40.01	32.50	22.15	7.52	2.44	MAS = 9.90 (m)	2510.00	2510.00				MINPT-O-EOU	
	40.16	32.50	22.20	7.66	2.44	MAS = 9.90 (m)	2530.00	2530.00				MinPt-O-SF	
	87.64	32.50	67.90	55.14	4.94	MAS = 9.90 (m)	3040.00	3040.00	OSF>5.00			Exit Alert	
	843.46	97.35	777.72	746.11	13.30	OSF1.50	11742.38	11742.38				MinPts	
	843.71	97.42	777.93	746.29	13.29	OSF1.50	11760.00	11760.00				MinPt-O-SF	
	1025.86	92.56	963.32	933.30	17.04	OSF1.50	12840.00	12339.52				MinPt-CtCt	
	1025.86	309.61	818.63	716.26	5.00	OSF1.50	21960.00	12301.02	OSF<5.00			Enter Alert	
	1025.88	316.98	813.73	708.90	4.88	OSF1.50	22197.55	12300.00				MinPts	
Rover Operating Co Wimberly #5 (Offset) Oil Inc Only 0ft-5050ft (Def Survey)													Warning Alert
	574.14	32.81	571.64	541.33	N/A	MAS = 10.00 (m)	0.00	0.00				Surface	
	573.79	32.81	571.25	540.98	12685.07	MAS = 10.00 (m)	10.00	10.00				MinPt-O-SF	
	573.60	32.81	571.08	540.79	27714.68	MAS = 10.00 (m)	26.00	26.00				MinPts	
	570.77	66.74	525.44	504.03	13.27	OSF1.50	1300.00	1300.00				MinPt-CtCt	
	572.16	128.62	485.59	443.55	6.78	OSF1.50	2490.00	2490.00				MinPt-CtCt	
	577.12	175.24	459.46	401.88	4.99	OSF1.50	3380.00	3380.00	OSF<5.00			Enter Alert	
	573.47	210.48	432.32	362.99	4.12	OSF1.50	4060.00	4060.00				MinPt-CtCt	
	584.62	264.42	407.50	320.20	3.33	OSF1.50	5080.00	5080.00				MinPts	
	711.49	218.57	564.94	492.92	4.92	OSF1.50	5480.00	5480.00	OSF>5.00			Exit Alert	
	6940.62	34.72	6916.64	6905.90	323.00	OSF1.50	12000.00	11987.68				MinPt-O-SF	
	7251.37	37.50	7225.54	7213.87	310.67	OSF1.50	12500.00	12290.53				MinPt-O-SF	
	10218.21	231.01	10063.38	9987.21	67.06	OSF1.50	19560.00	12311.33				MinPt-O-SF	
	12209.69	263.00	12033.52	11946.68	70.29	OSF1.50	22197.55	12300.00				TD	
Continental Wimberly #6 (Offset) - Plugged Oil Inc Only 0ft-5100ft (Def Survey)													Warning Alert
	851.30	32.81	848.80	818.49	N/A	MAS = 10.00 (m)	0.00	0.00				Surface	
	849.93	32.81	847.26	817.12	4973.53	MAS = 10.00 (m)	26.00	26.00				MinPt-O-SF	
	848.54	32.81	836.63	815.73	89.94	MAS = 10.00 (m)	440.00	440.00				MinPts	
	846.04	64.37	802.29	781.67	20.45	OSF1.50	1350.00	1350.00				MinPt-CtCt	
	849.40	133.83	759.35	715.57	9.67	OSF1.50	2690.00	2690.00				MinPt-CtCt	
	847.64	192.79	718.28	654.85	6.66	OSF1.50	3820.00	3820.00				MinPt-CtCt	
	850.76	257.46	678.29	593.30	4.99	OSF1.50	5040.00	5040.00	OSF<5.00			Enter Alert	
	847.72	262.55	671.85	585.17	4.88	OSF1.50	5160.00	5160.00				MinPts	
	858.02	259.53	684.16	598.49	4.99	OSF1.50	5290.00	5290.00	OSF>5.00			Exit Alert	
	7161.28	34.46	7137.48	7126.82	335.98	OSF1.50	12500.00	12290.53				MinPt-O-SF	
	10097.22	229.71	9943.25	9867.51	66.64	OSF1.50	19480.00	12311.67				MinPt-O-SF	
	12155.26	262.47	11979.45	11892.80	70.12	OSF1.50	22197.55	12300.00				TD	
Cimarex Dos Equis 11-14 Federal Com 49H Rev0 RM 22Aug19 (Non-Def Plan)													Warning Alert
	1333.98	32.81	1331.48	1301.17	N/A	MAS = 10.00 (m)	0.00	0.00				Surface	
	1333.98	32.81	1331.47	1301.17	113070.26	MAS = 10.00 (m)	26.00	26.00				WRP	
	1333.98	112.03	1258.46	1221.95	18.23	OSF1.50	11680.00	11680.00				MinPts	
	1026.75	108.93	953.00	917.82	14.54	OSF1.50	12470.00	12281.88				MinPt-O-SF	
	1025.89	108.80	952.24	917.10	14.55	OSF1.50	12500.00	12290.53				MinPts	
	1025.88	310.16	817.98	715.72	5.00	OSF1.50	22100.00	12300.42	OSF<5.00			Enter Alert	
	1025.88	313.14	815.99	712.73	4.95	OSF1.50	22197.55	12300.00				MinPts	

Offset Trajectory	Separation			Allow	Sep.	Controlling	Reference Trajectory		Risk Level			Alert	Status
	Ct-Ct (ft)	MAS (ft)	EOU (ft)	Dev. (ft)	Fact.	Rule	MD (ft)	TVD (ft)	Alert	Minor	Major		
MCI Operating Hanagan Federal #2 (Offset) Oil Blind 0ft-4962ft (Def Survey)													Warning Alert
	3024.57	32.81	3022.07	2991.76	N/A	MAS = 10.00 (m)	0.00	0.00				Surface	
	3024.57	32.81	3019.77	2991.76	1317.17	MAS = 10.00 (m)	26.00	26.00				WRP	
	3024.57	909.98	2417.08	2114.59	5.00	OSF1.50	2940.00	2940.00	OSF<5.00			Enter Alert	
	3024.57	1545.00	1993.74	1479.57	2.94	OSF1.50	4960.00	4960.00				MinPt-CtCt	
	3024.57	1546.92	1992.46	1477.66	2.94	OSF1.50	4970.00	4970.00				MinPts	
	3945.71	1186.75	3153.71	2758.96	4.99	OSF1.50	7500.00	7500.00	OSF>5.00			Exit Alert	
	7504.98	296.53	7306.46	7208.45	38.27	OSF1.50	13760.00	12336.24				MinPt-O-ADP	
	7421.63	195.71	7290.32	7225.92	57.60	OSF1.50	14390.00	12333.53				MINPT-O-EOU	
	7391.10	149.02	7290.92	7242.08	75.64	OSF1.50	15060.00	12330.65				MinPt-CtCt	
	7432.94	232.53	7277.09	7200.41	48.45	OSF1.50	15850.00	12327.26				MINPT-O-EOU	
	7511.15	326.60	7292.58	7184.55	34.75	OSF1.50	16400.00	12324.90				MinPt-O-ADP	
	10273.16	1098.06	9540.29	9175.10	14.06	OSF1.50	22197.55	12300.00				MinPt-O-SF	
Marks and Garner Hanagan Federal #1 (Offset) Oil Blind 0ft-5065ft (Def Survey)													Warning Alert
	4257.98	32.81	4255.48	4225.17	N/A	MAS = 10.00 (m)	0.00	0.00				Surface	
	4257.98	32.81	4252.97	4225.17	1692.47	MAS = 10.00 (m)	26.00	26.00				WRP	
	4257.98	1281.59	3402.76	2976.39	4.99	OSF1.50	4120.00	4120.00	OSF<5.00			Enter Alert	
	4257.98	1577.09	3205.75	2680.89	4.05	OSF1.50	5060.00	5060.00				MinPt-CtCt	
	4257.98	1579.30	3204.29	2678.69	4.05	OSF1.50	5070.00	5070.00				MinPts	
	4731.43	1421.85	3782.69	3309.58	5.00	OSF1.50	7130.00	7130.00	OSF>5.00			Exit Alert	
	7398.32	309.15	7191.39	7089.17	36.18	OSF1.50	15120.00	12330.40				MinPt-O-ADP	
	7291.21	179.39	7170.79	7111.83	61.81	OSF1.50	16370.00	12325.03				MinPt-CtCt	
	7328.23	250.89	7160.14	7077.34	44.24	OSF1.50	17110.00	12321.85				MINPT-O-EOU	
	7407.19	345.80	7175.82	7061.39	32.35	OSF1.50	17680.00	12319.40				MinPt-O-ADP	
	9331.21	1015.78	8653.19	8315.43	13.81	OSF1.50	22197.55	12300.00				MinPt-O-SF	
MCI Operating Gulf Hanagan Federal #2 (Offset) Oil Blind 0ft-5046ft (Def Survey)													Warning Alert
	4371.27	32.81	4368.77	4338.46	N/A	MAS = 10.00 (m)	0.00	0.00				Surface	
	4371.27	32.81	4366.54	4338.46	1957.77	MAS = 10.00 (m)	26.00	26.00				WRP	
	4371.27	1315.32	3493.56	3055.95	4.99	OSF1.50	4230.00	4230.00	OSF<5.00			Enter Alert	
	4371.27	1573.10	3321.70	2798.17	4.17	OSF1.50	5050.00	5050.00				MinPt-CtCt	
	4371.28	1573.32	3321.57	2797.96	4.17	OSF1.50	5060.00	5060.00				MinPts	
	4782.14	1438.67	3822.19	3343.47	4.99	OSF1.50	6990.00	6990.00	OSF>5.00			Exit Alert	
	7412.92	306.30	7207.89	7106.62	36.59	OSF1.50	15160.00	12330.22				MinPt-O-ADP	
	7320.48	193.60	7190.58	7126.88	57.44	OSF1.50	15910.00	12327.00				MINPT-O-EOU	
	7301.05	167.63	7188.46	7133.41	66.30	OSF1.50	16440.00	12324.73				MinPt-CtCt	
	7341.22	247.20	7175.59	7094.03	44.99	OSF1.50	17210.00	12321.42				MINPT-O-EOU	
	7420.66	342.89	7191.23	7077.76	32.69	OSF1.50	17770.00	12319.01				MinPt-O-ADP	
	9296.23	1003.40	8626.46	8292.83	13.93	OSF1.50	22197.55	12300.00				MinPt-O-SF	
Cimarex Dos Equis 11 Federal #2H XEM + MWD 0ft to 11103ft (Def Survey)													Pass
	471.27	32.81	468.77	438.46	N/A	MAS = 10.00 (m)	0.00	0.00				MinPts	
	471.28	32.81	468.76	438.47	38258.98	MAS = 10.00 (m)	26.00	26.00				WRP	
	472.87	32.81	466.71	440.07	128.38	MAS = 10.00 (m)	880.00	880.00				MinPts	
	472.89	32.81	466.07	440.08	108.74	MAS = 10.00 (m)	1030.00	1030.00				MinPts	
	472.88	32.81	465.13	440.08	89.55	MAS = 10.00 (m)	1240.00	1240.00				MinPts	
	473.60	32.81	464.80	440.80	74.75	MAS = 10.00 (m)	1480.00	1480.00				MINPT-O-EOU	
	514.78	36.88	489.35	477.89	22.35	OSF1.50	5150.00	5150.00				MinPt-CtCt	
	515.09	38.09	488.86	477.00	21.60	OSF1.50	5310.00	5310.00				MINPT-O-EOU	
	515.61	38.72	488.96	476.89	21.25	OSF1.50	5390.00	5390.00				MinPt-O-ADP	
	507.45	41.97	478.64	465.48	19.19	OSF1.50	5910.00	5910.00				MinPt-CtCt	
	507.47	42.03	478.62	465.44	19.16	OSF1.50	5920.00	5920.00				MINPT-O-EOU	
	507.52	42.10	478.62	465.42	19.13	OSF1.50	5930.00	5930.00				MinPt-O-ADP	
	518.01	45.97	486.53	472.04	17.79	OSF1.50	6520.00	6520.00				MinPt-O-ADP	
	521.36	48.73	488.04	472.63	16.83	OSF1.50	6940.00	6940.00				MinPt-O-ADP	
	525.07	52.02	489.56	473.05	15.83	OSF1.50	7430.00	7430.00				MINPT-O-EOU	
	526.38	54.73	489.06	471.66	15.05	OSF1.50	7830.00	7830.00				MINPT-O-EOU	
	526.73	55.14	489.14	471.59	14.94	OSF1.50	7890.00	7890.00				MinPt-O-ADP	
	537.75	58.02	498.24	479.73	14.46	OSF1.50	8320.00	8320.00				MinPt-O-SF	
	549.28	60.63	508.03	488.66	14.11	OSF1.50	8710.00	8710.00				MINPT-O-EOU	
	550.09	61.65	508.16	488.44	13.89	OSF1.50	8860.00	8860.00				MinPt-O-ADP	
	554.52	64.93	510.40	489.59	13.26	OSF1.50	9320.00	9320.00				MinPt-CtCt	
	554.77	65.61	510.20	489.17	13.13	OSF1.50	9430.00	9430.00				MINPT-O-EOU	
	555.80	67.06	510.26	488.74	12.86	OSF1.50	9650.00	9650.00				MINPT-O-EOU	
	556.25	67.61	510.34	488.64	12.76	OSF1.50	9730.00	9730.00				MinPt-O-ADP	
	564.50	72.13	515.58	492.37	12.11	OSF1.50	10380.00	10380.00				MinPt-O-ADP	
	566.77	74.62	516.18	492.14	11.74	OSF1.50	10730.00	10730.00				MINPT-O-EOU	
	566.94	74.83	516.21	492.10	11.70	OSF1.50	10760.00	10760.00				MinPt-O-ADP	
	574.78	77.27	522.44	497.51	11.48	OSF1.50	11120.00	11120.00				MinPt-O-SF	
	1295.40	41.09	1267.17	1254.31	50.25	OSF1.50	12500.00	12290.53				MinPt-O-SF	
	1713.53	64.05	1669.99	1649.48	41.70	OSF1.50	13290.00	12338.26				MinPt-O-SF	
	10106.20	90.19	10045.25	10016.02	172.84	OSF1.50	22197.55	12300.00				TD	
Cimarex Dos Equis 11 Federal #2H ST01 Xem+MWD 10343ft to 15244ft (Def Survey)													Pass
	471.27	32.81	468.77	438.46	N/A	MAS = 10.00 (m)	0.00	0.00				MinPts	
	471.28	32.81	468.76	438.47	38258.98	MAS = 10.00 (m)	26.00	26.00				WRP	
	472.87	32.81	466.71	440.07	128.38	MAS = 10.00 (m)	880.00	880.00				MinPts	
	472.89	32.81	466.07	440.08	108.74	MAS = 10.00 (m)	1030.00	1030.00				MinPts	
	472.88	32.81	465.13	440.08	89.55	MAS = 10.00 (m)	1240.00	1240.00				MinPts	
	473.60	32.81	464.80	440.80	74.75	MAS = 10.00 (m)	1480.00	1480.00				MINPT-O-EOU	
	514.78	36.88	489.35	477.89	22.35	OSF1.50	5150.00	5150.00				MinPt-CtCt	
	515.09	38.09	488.86	477.00	21.60	OSF1.50	5310.00	5310.00				MINPT-O-EOU	
	515.61	38.72	488.96	476.89	21.25	OSF1.50	5390.00	5390.00				MinPt-O-ADP	
	507.45	41.97	478.64	465.48	19.19	OSF1.50	5910.00	5910.00				MinPt-CtCt	
	507.47	42.03	478.62	465.44	19.16	OSF1.50	5920.00	5920.00				MINPT-O-EOU	
	507.52	42.10	478.62	465.42	19.13	OSF1.50	5930.00	5930.00				MinPt-O-ADP	
	518.01	45.97	486.53	472.04	17.79	OSF1.50	6520.00	6520.00				MinPt-O-ADP	
	521.36	48.73	488.04	472.63	16.83	OSF1.50	6940.00	6940.00				MinPt-O-ADP	
	525.07	52.02	489.56	473.05	15.83	OSF1.50	7430.00	7430.00				MINPT-O-EOU	
	526.38	54.73	489.06	471.66	15.05	OSF1.50	7830.00	7830.00				MINPT-O-EOU	

Offset Trajectory	Separation			Allow	Sep.	Controlling	Reference Trajectory		Risk Level			Alert	Status
	Ct-Ct (ft)	MAS (ft)	EOU (ft)	Dev. (ft)	Fact.	Rule	MD (ft)	TVD (ft)	Alert	Minor	Major		
	526.73	55.14	489.14	471.59	14.94	OSF1.50	7890.00	7890.00				MinPt-O-ADP	
	537.75	58.02	498.24	479.73	14.46	OSF1.50	8320.00	8320.00				MinPt-O-SF	
	549.28	60.63	508.03	488.66	14.11	OSF1.50	8710.00	8710.00				MINPT-O-EOU	
	550.09	61.65	508.16	488.44	13.89	OSF1.50	8860.00	8860.00				MinPt-O-ADP	
	554.52	64.93	510.40	489.59	13.26	OSF1.50	9320.00	9320.00				MinPt-CtCt	
	554.77	65.61	510.20	489.17	13.13	OSF1.50	9430.00	9430.00				MINPT-O-EOU	
	555.80	67.06	510.26	488.74	12.86	OSF1.50	9650.00	9650.00				MINPT-O-EOU	
	556.25	67.61	510.34	488.64	12.76	OSF1.50	9730.00	9730.00				MinPt-O-ADP	
	564.34	71.93	515.55	492.41	12.14	OSF1.50	10350.00	10350.00				MinPt-O-ADP	
	565.73	72.27	516.72	493.46	12.11	OSF1.50	10410.00	10410.00				MinPt-O-SF	
	1513.42	40.10	1485.85	1473.32	60.27	OSF1.50	12500.00	12290.53				MinPt-O-SF	
	1550.23	91.02	1488.72	1459.21	26.23	OSF1.50	14500.00	12333.06				MinPt-CtCt	
	1551.83	104.06	1481.62	1447.76	22.88	OSF1.50	14900.00	12331.34				MinPt-CtCt	
	1559.74	135.00	1468.91	1424.74	17.63	OSF1.50	15810.00	12327.43				MinPt-CtCt	
	1559.49	142.65	1463.55	1416.84	16.66	OSF1.50	16030.00	12326.49				MinPt-CtCt	
	1560.46	153.62	1457.21	1406.84	15.46	OSF1.50	16340.00	12325.16				MinPt-CtCt	
	1560.07	178.22	1440.42	1381.85	13.30	OSF1.50	16690.00	12323.65				MinPt-CtCt	
	1560.23	178.63	1440.31	1381.60	13.27	OSF1.50	16710.00	12323.57				MINPT-O-EOU	
	1560.40	178.82	1440.36	1381.59	13.25	OSF1.50	16720.00	12323.52				MinPt-O-ADP	
	1568.50	180.82	1447.11	1387.67	13.17	OSF1.50	16850.00	12322.97				MinPt-O-SF	
	5726.53	120.37	5645.45	5606.16	72.85	OSF1.50	22197.55	12300.00				TD	
Cimarex Dos Equis 11 Federal #1H Extreme+MWD 0ft to 15324ft (Def Survey)													Pass
	527.08	32.81	524.58	494.27	N/A	MAS = 10.00 (m)	0.00	0.00				Surface	
	527.04	32.81	524.52	494.23	24967.19	MAS = 10.00 (m)	26.00	26.00				WRP	
	526.28	32.81	523.35	493.48	1194.21	MAS = 10.00 (m)	150.00	150.00				MinPts	
	526.31	32.81	523.29	493.50	1008.70	MAS = 10.00 (m)	170.00	170.00				MINPT-O-EOU	
	529.14	32.81	520.66	496.34	88.02	MAS = 10.00 (m)	1370.00	1370.00				MinPts	
	531.34	32.81	517.83	498.54	48.02	MAS = 10.00 (m)	2530.00	2530.00				MINPT-O-EOU	
	535.92	32.81	518.61	503.11	36.03	MAS = 10.00 (m)	3390.00	3390.00				MINPT-O-EOU	
	536.60	32.81	517.01	503.79	31.24	MAS = 10.00 (m)	3890.00	3890.00				MinPts	
	536.60	32.81	516.18	503.80	29.80	MAS = 10.00 (m)	4080.00	4080.00				MinPts	
	536.86	32.81	515.80	504.05	28.79	MAS = 10.00 (m)	4220.00	4220.00				MINPT-O-EOU	
	548.13	34.82	524.08	513.31	25.32	OSF1.50	4870.00	4870.00				MinPt-CtCt	
	548.18	34.95	524.04	513.23	25.22	OSF1.50	4890.00	4890.00				MINPT-O-EOU	
	548.24	35.02	524.06	513.22	25.17	OSF1.50	4900.00	4900.00				MinPt-O-ADP	
	562.39	44.92	531.61	517.47	19.80	OSF1.50	6410.00	6410.00				MinPt-CtCt	
	488.18	72.85	438.73	415.33	10.37	OSF1.50	10540.00	10540.00				MinPt-CtCt	
	488.19	72.92	438.70	415.27	10.36	OSF1.50	10550.00	10550.00				MinPts	
	488.77	73.09	439.16	415.67	10.35	OSF1.50	10580.00	10580.00				MinPt-O-SF	
	1541.90	66.53	1496.72	1475.37	36.06	OSF1.50	13610.00	12336.88				MinPt-CtCt	
	1542.45	68.12	1496.21	1474.33	35.20	OSF1.50	13680.00	12336.58				MINPT-O-EOU	
	1543.81	69.60	1496.57	1474.20	34.45	OSF1.50	13740.00	12336.32				MinPt-O-ADP	
	1560.24	115.83	1482.18	1444.41	20.62	OSF1.50	15110.00	12330.44				MinPt-CtCt	
	1554.64	165.22	1443.66	1389.42	14.31	OSF1.50	16560.00	12324.21				MinPt-CtCt	
	1554.85	186.18	1429.89	1368.67	12.68	OSF1.50	16680.00	12323.70				MinPts	
	1557.66	186.94	1432.20	1370.72	12.65	OSF1.50	16760.00	12323.35				MinPt-O-SF	
	5746.69	114.30	5669.66	5632.39	77.07	OSF1.50	22197.55	12300.00				TD	
Rover Operating Co Wimberly #7 (Offset) Oil Inc Only 0ft-5118ft (Def Survey)													Pass
	1591.26	32.81	1588.76	1558.45	N/A	MAS = 10.00 (m)	0.00	0.00				Surface	
	1591.16	32.81	1588.65	1558.35	147727.84	MAS = 10.00 (m)	10.00	10.00				MinPt-O-SF	
	1591.13	32.81	1588.63	1558.32	456526.78	MAS = 10.00 (m)	20.00	20.00				MinPts	
	1591.13	32.81	1588.53	1558.32	14726.67	MAS = 10.00 (m)	26.00	26.00				WRP	
	1591.54	52.41	1555.76	1539.12	47.75	OSF1.50	980.00	980.00				MinPt-CtCt	
	1591.87	54.62	1554.62	1537.25	45.74	OSF1.50	1040.00	1040.00				MINPT-O-EOU	
	1592.04	54.83	1554.66	1537.21	45.56	OSF1.50	1050.00	1050.00				MinPt-O-ADP	
	1589.81	66.20	1544.85	1523.61	37.38	OSF1.50	1250.00	1250.00				MinPt-CtCt	
	1591.52	71.18	1543.23	1520.34	34.71	OSF1.50	1380.00	1380.00				MINPT-O-EOU	
	1591.33	91.24	1529.67	1500.09	26.86	OSF1.50	1750.00	1750.00				MinPt-CtCt	
	1595.31	102.67	1526.03	1492.64	23.85	OSF1.50	2000.00	2000.00				MINPT-O-EOU	
	1593.55	156.55	1488.35	1437.00	15.49	OSF1.50	3000.00	3000.00				MinPt-CtCt	
	1591.72	264.31	1414.68	1327.42	9.11	OSF1.50	5080.00	5080.00				MinPt-CtCt	
	1591.81	267.36	1412.73	1324.45	9.00	OSF1.50	5140.00	5140.00				MinPts	
	7209.59	45.21	7178.61	7164.38	253.14	OSF1.50	13730.00	12336.37				MinPt-CtCt	
	7210.46	47.62	7177.89	7162.85	239.63	OSF1.50	13840.00	12335.89				MINPT-O-EOU	
	7211.90	49.35	7178.16	7162.55	230.82	OSF1.50	13910.00	12335.59				MinPt-O-ADP	
	9850.79	238.06	9691.25	9612.73	62.71	OSF1.50	20440.00	12307.55				MinPt-O-SF	
	11123.07	261.91	10947.63	10861.16	64.30	OSF1.50	22197.55	12300.00				TD	
Continental Wimberly #1 (Offset) Plugged Oil Inc Only 0ft-5091ft (Def Survey)													Pass
	1780.58	32.81	1778.01	1747.77	24163.08	MAS = 10.00 (m)	0.00	0.00				Surface	
	1780.58	32.81	1777.55	1747.77	3360.42	MAS = 10.00 (m)	26.00	26.00				WRP	
	1779.23	36.92	1753.79	1742.32	77.44	OSF1.50	690.00	690.00				MinPt-CtCt	
	1771.51	137.14	1679.25	1634.37	19.71	OSF1.50	2600.00	2600.00				MinPt-CtCt	
	1765.12	245.51	1600.61	1519.61	10.88	OSF1.50	4660.00	4660.00				MinPt-CtCt	
	1768.32	255.35	1597.25	1512.97	10.48	OSF1.50	4900.00	4900.00				MINPT-O-EOU	
	1772.59	267.22	1593.61	1505.37	10.03	OSF1.50	5090.00	5090.00				MinPts	
	7276.87	47.73	7244.21	7229.14	241.23	OSF1.50	13730.00	12336.37				MinPt-CtCt	
	7277.67	50.02	7243.48	7227.64	229.64	OSF1.50	13840.00	12335.89				MINPT-O-EOU	
	7279.04	51.67	7243.76	7227.37	221.99	OSF1.50	13910.00	12335.59				MinPt-O-ADP	
	9923.92	238.80	9763.88	9685.11	62.98	OSF1.50	20480.00	12307.38				MinPt-O-SF	
	11163.02	262.14	10987.43	10900.88	64.48	OSF1.50	22197.55	12300.00				TD	
Cimarex Dos Equis 11-14 Federal Com 23H Rev0 RM 22Aug19 (Def Plan)													Pass
	2384.47	32.81	2381.97	2351.66	N/A	MAS = 10.00 (m)	0.00	0.00				Surface	
	2384.47	32.81	2381.94	2351.66	70998.51	MAS = 10.00 (m)	26.00	26.00				WRP	
	2083.05	103.49	2012.99	1979.56	31.10	OSF1.50	12380.00	12247.11				MinPt-O-SF	
	2073.41	102.60	2003.94	1970.81	31.24	OSF1.50	12520.00	12295.61				MinPt-O-ADP	
	2073.16	102.29	2003.90	1970.87	31.34	OSF1.50	12570.00	12307.12				MINPT-O-EOU	
	2072.58	310.67	1864.40	1761.91	10.10	OSF1.50	22197.55	12300.00				MinPts	
Cimarex Dos Equis 11-14 Federal Com 24H Rev0 RM 22Aug19 (Def Plan)													Pass
	2404.42	32.81	2401.92	2371.61	N/A	MAS = 10.00 (m)	0.00	0.00				Surface	

Offset Trajectory	Separation			Allow	Sep.	Controlling	Reference Trajectory		Risk Level			Alert	Status
	Ct-Ct (ft)	MAS (ft)	EOU (ft)	Dev. (ft)	Fact.	Rule	MD (ft)	TVD (ft)	Alert	Minor	Major		
	2404.42	32.81	2401.89	2371.61	70198.48	MAS = 10.00 (m)	26.00	26.00				WRP	
	2404.42	32.81	2386.68	2371.61	157.63	MAS = 10.00 (m)	2480.00	2480.00				MinPts	
	2404.48	32.81	2386.62	2371.67	156.30	MAS = 10.00 (m)	2510.00	2510.00				MINPT-O-EOU	
	2773.05	53.04	2736.86	2720.01	82.23	OSF1.50	6280.00	6280.00				MinPt-O-SF	
	2602.31	96.05	2537.42	2506.26	41.71	OSF1.50	12340.00	12227.66				MinPt-O-SF	
	2586.28	95.08	2522.03	2491.20	41.90	OSF1.50	12502.59	12291.21				MinPt-O-ADP	
	2586.02	94.75	2521.99	2491.27	42.05	OSF1.50	12560.00	12304.95				MINPT-O-EOU	
	2585.51	311.52	2376.97	2273.99	12.54	OSF1.50	22197.55	12300.00				MinPts	
Bill J Graham Oil Hanagan D #4 (Offset) Plugged Oil Inc Only 0ft-5107ft (Def Survey)													Pass
	2668.29	32.81	2665.73	2635.48	43142.81	MAS = 10.00 (m)	0.00	0.00				Surface	
	2668.27	32.81	2665.20	2635.46	4661.85	MAS = 10.00 (m)	26.00	26.00				WRP	
	2664.45	32.81	2642.80	2631.64	139.02	MAS = 10.00 (m)	550.00	550.00				MinPts	
	2659.57	89.16	2599.30	2570.42	45.99	OSF1.50	1640.00	1640.00				MinPt-CtCt	
	2654.87	142.15	2559.27	2512.73	28.49	OSF1.50	2630.00	2630.00				MinPt-CtCt	
	2642.24	251.46	2473.76	2390.78	15.91	OSF1.50	4600.00	4600.00				MinPt-CtCt	
	2643.03	254.14	2472.76	2388.89	15.74	OSF1.50	4690.00	4690.00				MINPT-O-EOU	
	2644.24	255.59	2473.01	2388.65	15.66	OSF1.50	4740.00	4740.00				MinPt-O-ADP	
	2648.78	271.98	2466.62	2376.80	14.73	OSF1.50	5100.00	5100.00				MinPt-CtCt	
	2648.80	272.03	2466.61	2376.77	14.73	OSF1.50	5110.00	5110.00				MinPts	
	7487.59	81.34	7432.54	7406.26	142.42	OSF1.50	13750.00	12336.28				MinPt-CtCt	
	7487.87	82.01	7432.36	7405.86	141.22	OSF1.50	13810.00	12336.02				MINPT-O-EOU	
	7488.18	82.38	7432.43	7405.81	140.57	OSF1.50	13840.00	12335.89				MinPt-O-ADP	
	10043.74	243.63	9880.48	9800.10	62.46	OSF1.50	20440.00	12307.55				MinPt-O-SF	
	11291.43	267.32	11112.38	11024.11	63.94	OSF1.50	22197.55	12300.00				TD	
Bill J Graham Oil Hanagan D #3 (Offset) Oil Plugged Inc Only 0ft-4986ft (Def Survey)													Pass
	2951.87	32.81	2949.37	2919.07	N/A	MAS = 10.00 (m)	0.00	0.00				Surface	
	2951.87	32.81	2949.30	2919.06	45714.45	MAS = 10.00 (m)	10.00	10.00				MinPts	
	2951.87	32.81	2949.03	2919.06	8717.42	MAS = 10.00 (m)	26.00	26.00				WRP	
	2947.11	102.98	2877.62	2844.13	43.96	OSF1.50	1970.00	1970.00				MinPt-CtCt	
	2936.41	177.95	2816.95	2758.47	25.09	OSF1.50	3360.00	3360.00				MinPt-CtCt	
	2936.69	245.80	2771.99	2690.89	18.09	OSF1.50	4670.00	4670.00				MinPt-CtCt	
	2940.37	260.41	2765.93	2679.96	17.09	OSF1.50	5000.00	5000.00				MINPT-O-EOU	
	2942.40	263.96	2765.59	2678.44	16.87	OSF1.50	5070.00	5070.00				MinPts	
	7374.30	73.68	7324.35	7300.62	155.34	OSF1.50	15040.00	12330.74				MinPt-CtCt	
	7375.26	76.45	7323.46	7298.81	149.54	OSF1.50	15160.00	12330.22				MINPT-O-EOU	
	7376.72	78.18	7323.77	7298.54	146.16	OSF1.50	15230.00	12329.92				MinPt-O-ADP	
	9737.39	244.59	9573.49	9492.80	60.32	OSF1.50	21400.00	12303.43				MinPt-O-SF	
	10275.99	256.51	10104.15	10019.48	60.67	OSF1.50	22197.55	12300.00				TD	
Final Surveys - Cimarex Dos Equis 11-14 Federal Com 4H ST01 MWD 0ft-21967 (Def Survey)													Pass
	3757.20	32.81	3755.50	3724.39	N/A	MAS = 10.00 (m)	0.00	0.00				MinPts	
	3757.23	32.81	3755.48	3724.42	73475.53	MAS = 10.00 (m)	26.00	26.00				WRP	
	3757.29	32.81	3755.48	3724.48	33828.88	MAS = 10.00 (m)	50.00	50.00				MINPT-O-EOU	
	3752.50	33.08	3729.91	3719.41	178.66	OSF1.50	4660.00	4660.00				MinPt-CtCt	
	3752.55	33.25	3729.86	3719.30	177.70	OSF1.50	4690.00	4690.00				MINPT-O-EOU	
	3752.69	33.42	3729.88	3719.27	176.78	OSF1.50	4720.00	4720.00				MinPt-O-ADP	
	3785.57	53.36	3749.47	3732.21	109.58	OSF1.50	7730.00	7730.00				MinPt-CtCt	
	3785.88	54.36	3749.12	3731.52	107.53	OSF1.50	7900.00	7900.00				MINPT-O-EOU	
	3786.26	54.83	3749.19	3731.44	106.59	OSF1.50	7980.00	7980.00				MinPt-O-ADP	
	3804.19	73.21	3754.86	3730.98	79.61	OSF1.50	10790.00	10790.00				MinPt-CtCt	
	3804.34	73.68	3754.70	3730.66	79.10	OSF1.50	10860.00	10860.00				MINPT-O-EOU	
	3804.56	73.94	3754.74	3730.62	78.82	OSF1.50	10900.00	10900.00				MinPt-O-ADP	
	3817.39	79.68	3763.75	3737.71	73.28	OSF1.50	11800.00	11799.86				MinPt-O-SF	
	3815.21	79.60	3761.64	3735.62	73.29	OSF1.50	11820.00	11819.66				MinPt-O-SF	
	3636.16	77.85	3583.61	3558.31	71.82	OSF1.50	12340.00	12227.66				MinPt-O-SF	
	3613.37	76.71	3561.57	3536.66	72.50	OSF1.50	12720.00	12331.35				MinPt-O-ADP	
	3613.35	76.69	3561.56	3536.66	72.52	OSF1.50	12730.00	12332.42				MINPT-O-EOU	
	3613.35	76.67	3561.57	3536.67	72.54	OSF1.50	12740.00	12333.41				MinPt-CtCt	
	3636.49	78.34	3583.61	3558.15	71.36	OSF1.50	13350.00	12338.00				MinPts	
	3596.55	89.19	3536.45	3507.35	61.78	OSF1.50	14350.00	12333.70				MinPt-CtCt	
	3596.62	89.47	3536.33	3507.15	61.58	OSF1.50	14380.00	12333.57				MINPT-O-EOU	
	3596.77	89.65	3536.36	3507.11	61.45	OSF1.50	14400.00	12333.49				MinPt-O-ADP	
	3605.31	97.21	3539.86	3508.09	56.71	OSF1.50	14830.00	12331.64				MinPt-CtCt	
	3605.42	100.04	3538.10	3505.39	55.08	OSF1.50	14980.00	12331.00				MinPt-CtCt	
	3606.22	102.59	3537.19	3503.63	53.69	OSF1.50	15130.00	12330.35				MINPT-O-EOU	
	3607.53	104.15	3537.47	3503.38	52.89	OSF1.50	15220.00	12329.97				MinPt-O-ADP	
	3601.74	128.60	3515.38	3473.15	42.62	OSF1.50	16270.00	12325.46				MinPt-CtCt	
	3603.79	134.07	3513.78	3469.72	40.88	OSF1.50	16520.00	12324.38				MINPT-O-EOU	
	3604.49	134.88	3513.94	3469.61	40.64	OSF1.50	16560.00	12324.21				MinPt-O-ADP	
	3609.02	139.13	3515.63	3469.89	39.42	OSF1.50	16730.00	12323.48				MINPT-O-EOU	
	3611.70	143.35	3515.51	3468.36	38.28	OSF1.50	16890.00	12322.79				MINPT-O-EOU	
	3612.42	144.23	3515.64	3468.19	38.05	OSF1.50	16930.00	12322.62				MinPt-O-ADP	
	3619.90	156.03	3515.25	3463.87	35.20	OSF1.50	17350.00	12320.82				MinPt-CtCt	
	3620.16	160.77	3512.35	3459.38	34.16	OSF1.50	17530.00	12320.05				MinPt-CtCt	
	3601.12	185.68	3476.70	3415.44	29.38	OSF1.50	18440.00	12316.14				MinPt-CtCt	
	3601.02	189.30	3474.19	3411.73	28.81	OSF1.50	18570.00	12315.58				MinPt-CtCt	
	3601.70	191.47	3473.42	3410.23	28.48	OSF1.50	18670.00	12315.15				MINPT-O-EOU	
	3603.23	193.24	3473.77	3409.99	28.23	OSF1.50	18750.00	12314.81				MinPt-O-ADP	
	3607.67	197.86	3475.13	3409.81	27.60	OSF1.50	18910.00	12314.12				MINPT-O-EOU	
	3603.20	228.83	3450.01	3374.37	23.80	OSF1.50	19970.00	12309.57				MinPt-CtCt	
	3604.16	231.85	3448.96	3372.31	23.50	OSF1.50	20100.00	12309.01				MINPT-O-EOU	
	3609.91	238.43	3450.33	3371.48	22.88	OSF1.50	20350.00	12307.93				MinPt-O-ADP	
	3613.14	243.45	3450.21	3369.68	22.42	OSF1.50	20480.00	12307.38				MinPt-CtCt	
	3606.96	266.08	3428.94	3340.88	20.47	OSF1.50	21260.00	12304.03				MinPt-CtCt	
	3606.21	271.66	3424.47	3334.55	20.04	OSF1.50	21450.00	12303.21				MinPt-CtCt	
	3606.05	277.46	3420.44	3328.58	19.62	OSF1.50	21650.00	12302.35				MinPt-CtCt	
	3606.76	280.02	3419.45	3326.74	19.44	OSF1.50	21760.00	12301.88				MINPT-O-EOU	
	3607.65	281.12	3419.61	3326.53	19.37	OSF1.50	21810.00	12301.66				MinPt-O-ADP	
	3613.72	293.64	3417.33	3320.07	18.57	OSF1.50	22197.55	12300.00				MinPts	

Offset Trajectory	Separation			Allow	Sep.	Controlling	Reference Trajectory		Risk Level			Alert	Status
	Ct-Ct (ft)	MAS (ft)	EOU (ft)	Dev. (ft)	Fact.	Rule	MD (ft)	TVD (ft)	Alert	Minor	Major		
Final Surveys - Cimarex Dos Equis 11-14 Federal Com 4H MWD 0ft-13100ft (Surcon Corrected) (Def Survey)													Pass
	3757.20	32.81	3755.50	3724.39	N/A	MAS = 10.00 (m)	0.00	0.00				MinPts	
	3757.23	32.81	3755.48	3724.42	73475.54	MAS = 10.00 (m)	26.00	26.00				WRP	
	3757.29	32.81	3755.48	3724.48	33828.88	MAS = 10.00 (m)	50.00	50.00				MINPT-O-EOU	
	3752.50	33.08	3729.91	3719.41	178.66	OSF1.50	4660.00	4660.00				MinPt-CtCt	
	3752.55	33.25	3729.86	3719.30	177.70	OSF1.50	4690.00	4690.00				MINPT-O-EOU	
	3752.69	33.42	3729.88	3719.27	176.78	OSF1.50	4720.00	4720.00				MinPt-O-ADP	
	3785.57	53.36	3749.47	3732.21	109.58	OSF1.50	7730.00	7730.00				MinPt-CtCt	
	3785.88	54.36	3749.12	3731.52	107.53	OSF1.50	7900.00	7900.00				MINPT-O-EOU	
	3786.26	54.83	3749.19	3731.44	106.59	OSF1.50	7980.00	7980.00				MinPt-O-ADP	
	3804.19	73.21	3754.86	3730.98	79.61	OSF1.50	10790.00	10790.00				MinPt-CtCt	
	3804.34	73.68	3754.70	3730.66	79.10	OSF1.50	10860.00	10860.00				MINPT-O-EOU	
	3804.56	73.94	3754.74	3730.62	78.82	OSF1.50	10900.00	10900.00				MinPt-O-ADP	
	3817.39	79.68	3763.75	3737.71	73.28	OSF1.50	11800.00	11799.86				MinPt-O-SF	
	3673.47	77.88	3620.92	3595.58	72.45	OSF1.50	12250.00	12175.82				MinPt-O-SF	
	3642.82	76.83	3590.96	3565.99	72.90	OSF1.50	12470.00	12281.88				MinPts	
	10486.04	108.25	10413.35	10377.79	147.41	OSF1.50	22197.55	12300.00				TD	
Rover Operating Co Wimberly #6 (Offset) Oil Inc Only 0ft-5075ft (Def Survey)													Pass
	4612.82	32.81	4610.31	4580.01	N/A	MAS = 10.00 (m)	0.00	0.00				Surface	
	4612.82	32.81	4609.85	4580.01	9998.20	MAS = 10.00 (m)	26.00	26.00				WRP	
	4612.41	32.81	4594.83	4579.60	305.75	MAS = 10.00 (m)	480.00	480.00				MinPts	
	4602.06	169.66	4488.11	4432.40	41.28	OSF1.50	3220.00	3220.00				MinPt-CtCt	
	4603.91	175.17	4486.29	4428.74	39.97	OSF1.50	3410.00	3410.00				MINPT-O-EOU	
	4606.06	177.75	4486.73	4428.31	39.40	OSF1.50	3500.00	3500.00				MinPt-O-ADP	
	4599.82	218.20	4453.51	4381.62	31.97	OSF1.50	4130.00	4130.00				MinPt-CtCt	
	4606.64	239.08	4446.42	4367.57	29.19	OSF1.50	4640.00	4640.00				MINPT-O-EOU	
	4611.24	266.47	4432.76	4344.77	26.19	OSF1.50	5070.00	5070.00				MinPt-CtCt	
	4611.24	266.48	4432.76	4344.76	26.19	OSF1.50	5080.00	5080.00				MinPts	
	4611.38	266.49	4432.88	4344.89	26.19	OSF1.50	5110.00	5110.00				MinPt-O-SF	
	7428.96	112.40	7353.20	7316.57	101.37	OSF1.50	16390.00	12324.94				MinPt-CtCt	
	7429.72	114.68	7352.44	7315.05	99.32	OSF1.50	16500.00	12324.47				MINPT-O-EOU	
	7430.83	115.98	7352.67	7314.85	98.19	OSF1.50	16560.00	12324.21				MinPt-O-ADP	
	9422.71	254.58	9252.16	9168.13	56.05	OSF1.50	22190.00	12300.03				MinPt-O-SF	
	9427.36	254.71	9256.72	9172.65	56.05	OSF1.50	22197.55	12300.00				TD	
Tenneco Oil Company USA Jennings Fed #3 (Offset) Plugged Oil Inc Only 0ft-5030ft (Def Survey)													Pass
	5614.81	32.81	5612.31	5582.00	N/A	MAS = 10.00 (m)	0.00	0.00				Surface	
	5614.77	32.81	5612.26	5581.96	959963.34	MAS = 10.00 (m)	10.00	10.00				MinPt-O-SF	
	5614.74	32.81	5612.24	5581.93	N/A	MAS = 10.00 (m)	26.00	26.00				WRP	
	5614.71	32.81	5610.30	5581.90	2944.80	MAS = 10.00 (m)	130.00	130.00				MinPts	
	5613.85	49.18	5580.23	5564.67	180.33	OSF1.50	960.00	960.00				MinPt-CtCt	
	5607.96	145.47	5510.14	5462.49	58.81	OSF1.50	2800.00	2800.00				MinPt-CtCt	
	5615.80	169.32	5502.09	5446.49	50.47	OSF1.50	3390.00	3390.00				MINPT-O-EOU	
	5603.78	246.16	5438.84	5357.62	34.48	OSF1.50	4710.00	4710.00				MinPt-CtCt	
	5604.10	247.19	5438.47	5356.91	34.34	OSF1.50	4780.00	4780.00				MINPT-O-EOU	
	5604.57	247.77	5438.55	5356.80	34.26	OSF1.50	4820.00	4820.00				MinPt-O-ADP	
	5611.64	263.01	5435.47	5348.63	32.30	OSF1.50	5060.00	5060.00				MinPts	
	5611.89	263.03	5435.69	5348.85	32.30	OSF1.50	5110.00	5110.00				MinPt-O-SF	
	7288.40	126.48	7203.24	7161.91	88.15	OSF1.50	17700.00	12319.32				MinPt-CtCt	
	7289.36	129.38	7202.28	7159.99	86.15	OSF1.50	17820.00	12318.80				MINPT-O-EOU	
	7290.59	130.86	7202.51	7159.72	85.16	OSF1.50	17880.00	12318.54				MinPt-O-ADP	
	8563.70	244.45	8399.90	8319.25	53.08	OSF1.50	22197.55	12300.00				MinPt-O-SF	
MCI Operating Jennings Federal #1 (Offset) SWD Blind 0ft-5019ft (Def Survey)													Pass
	5962.71	32.81	5960.21	5929.90	N/A	MAS = 10.00 (m)	0.00	0.00				Surface	
	5962.70	32.81	5960.16	5929.89	157797.99	MAS = 10.00 (m)	26.00	26.00				WRP	
	5962.70	49.25	5929.04	5913.45	191.24	OSF1.50	5020.00	5020.00				MinPt-CtCt	
	5962.74	49.43	5928.96	5913.31	190.51	OSF1.50	5050.00	5050.00				MINPT-O-EOU	
	5962.79	49.48	5928.97	5913.31	190.32	OSF1.50	5060.00	5060.00				MinPt-O-ADP	
	6274.08	56.67	6235.47	6217.41	173.66	OSF1.50	6980.00	6980.00				MinPt-O-SF	
	9130.34	53.96	9093.54	9076.38	266.07	OSF1.50	12502.59	12291.21				MinPt-O-SF	
	8953.19	51.95	8917.73	8901.24	271.49	OSF1.50	12900.00	12339.93				MinPt-O-SF	
	7550.04	125.59	7465.47	7424.44	91.97	OSF1.50	17710.00	12319.27				MinPt-CtCt	
	7550.96	128.39	7464.53	7422.57	89.94	OSF1.50	17830.00	12318.76				MINPT-O-EOU	
	7552.13	129.78	7464.78	7422.36	88.98	OSF1.50	17890.00	12318.50				MinPt-O-ADP	
	8633.73	200.65	8499.13	8433.08	65.34	OSF1.50	21900.00	12301.28				MinPt-O-SF	
	8781.91	203.83	8645.20	8578.09	65.41	OSF1.50	22197.55	12300.00				TD	
MCI Operating Jennings Federal #5 (Offset) Oil Inc Only 0ft-4950ft (Def Survey)													Pass
	7189.23	32.81	7186.73	7156.42	N/A	MAS = 10.00 (m)	0.00	0.00				Surface	
	7189.19	32.81	7186.69	7156.39	N/A	MAS = 10.00 (m)	10.00	10.00				MinPt-O-SF	
	7189.17	32.81	7186.67	7156.36	N/A	MAS = 10.00 (m)	26.00	26.00				WRP	
	7188.45	32.81	7167.00	7155.65	379.18	MAS = 10.00 (m)	610.00	610.00				MinPts	
	7187.09	141.19	7092.13	7045.90	77.71	OSF1.50	2730.00	2730.00				MinPt-CtCt	
	7188.02	258.49	7014.86	6929.53	42.11	OSF1.50	4980.00	4980.00				MinPts	
	7188.49	258.54	7015.30	6929.95	42.10	OSF1.50	5060.00	5060.00				MinPt-O-SF	
	7576.18	166.51	7464.33	7409.66	69.27	OSF1.50	19030.00	12313.60				MinPt-CtCt	
	7576.99	168.96	7463.51	7408.03	68.25	OSF1.50	19140.00	12313.13				MINPT-O-EOU	
	7578.10	170.32	7463.72	7407.78	67.71	OSF1.50	19200.00	12312.87				MinPt-O-ADP	
	8211.96	242.58	8049.41	7969.38	51.29	OSF1.50	22197.55	12300.00				MinPt-O-SF	
MCI Operating Jennings Federal #6 (Offset) Oil Inc Only 0ft-4933ft (Def Survey)													Pass
	8245.67	32.81	8243.17	8212.87	N/A	MAS = 10.00 (m)	0.00	0.00				Surface	
	8245.61	32.81	8243.10	8212.80	N/A	MAS = 10.00 (m)	20.00	20.00				MinPt-O-SF	
	8245.60	32.81	8243.10	8212.79	N/A	MAS = 10.00 (m)	26.00	26.00				WRP	
	8245.34	34.08	8221.78	8211.26	391.52	OSF1.50	680.00	680.00				MinPt-CtCt	
	8248.94	150.08	8148.05	8098.86	83.81	OSF1.50	2910.00	2910.00				MinPt-CtCt	
	8244.04	257.37	8071.62	7986.66	48.51	OSF1.50	4970.00	4970.00				MinPts	
	8244.04	257.38	8071.62	7986.66	48.50	OSF1.50	4980.00	4980.00				MinPt-O-ADP	

Offset Trajectory	Separation			Allow	Sep.	Controlling	Reference Trajectory		Risk Level			Alert	Status
	Ct-Ct (ft)	MAS (ft)	EOU (ft)	Dev. (ft)	Fact.	Rule	MD (ft)	TVD (ft)	Alert	Minor	Major		
	8244.78	257.44	8072.32	7987.34	48.50	OSF1.50	5080.00	5080.00				MinPt-O-SF	
	10287.45	186.76	10162.11	10100.69	83.73	OSF1.50	13170.00	12338.77				MinPt-O-SF	
	7366.28	182.90	7243.51	7183.38	61.23	OSF1.50	20350.00	12307.93				MinPt-CtCt	
	7367.24	185.78	7242.55	7181.45	60.27	OSF1.50	20470.00	12307.42				MINPT-O-EOU	
	7368.45	187.24	7242.79	7181.21	59.81	OSF1.50	20530.00	12307.16				MinPt-O-ADP	
	7594.15	229.43	7440.36	7364.72	50.18	OSF1.50	22197.55	12300.00				MinPt-O-SF	
MCI Operating Jennings Federal #4 (Offset) Oil Inc Only 0ft-5000ft (Def Survey)													Pass
	8579.29	32.81	8576.79	8546.48	N/A	MAS = 10.00 (m)	0.00	0.00				Surface	
	8579.29	32.81	8576.45	8546.48	25224.62	MAS = 10.00 (m)	26.00	26.00				WRP	
	8578.15	48.96	8544.68	8529.20	276.90	OSF1.50	930.00	930.00				MinPt-CtCt	
	8571.67	152.05	8469.47	8419.63	85.96	OSF1.50	2900.00	2900.00				MinPt-CtCt	
	8575.16	162.66	8465.89	8412.51	80.29	OSF1.50	3260.00	3260.00				MINPT-O-EOU	
	8579.54	167.89	8466.78	8411.65	77.79	OSF1.50	3440.00	3440.00				MinPt-O-ADP	
	8560.76	239.43	8400.30	8321.33	54.19	OSF1.50	4520.00	4520.00				MinPt-CtCt	
	8563.72	248.89	8396.96	8314.83	52.12	OSF1.50	4850.00	4850.00				MINPT-O-EOU	
	8566.56	252.34	8397.50	8314.22	51.42	OSF1.50	4980.00	4980.00				MinPt-O-ADP	
	8572.41	264.41	8395.30	8308.00	49.08	OSF1.50	5170.00	5170.00				MinPts	
	9826.20	183.78	9702.85	9642.42	81.29	OSF1.50	14190.00	12334.39				MinPt-O-SF	
	9801.14	183.32	9678.09	9617.82	81.29	OSF1.50	14230.00	12334.22				MinPt-O-SF	
	7648.23	197.39	7515.81	7450.85	58.85	OSF1.50	20360.00	12307.89				MinPt-CtCt	
	7649.04	199.83	7514.98	7449.20	58.12	OSF1.50	20470.00	12307.42				MINPT-O-EOU	
	7650.14	201.18	7515.19	7448.96	57.74	OSF1.50	20530.00	12307.16				MinPt-O-ADP	
	7866.07	240.50	7704.91	7625.58	49.56	OSF1.50	22197.55	12300.00				MinPt-O-SF	
MCI Operating Jennings Federal #2 (Offset) Inc Only 0ft-5000ft (Def Survey)													Pass
	9866.22	32.81	9863.72	9833.41	N/A	MAS = 10.00 (m)	0.00	0.00				Surface	
	9866.15	32.81	9863.64	9833.34	N/A	MAS = 10.00 (m)	20.00	20.00				MinPt-O-SF	
	9866.14	32.81	9863.63	9833.33	N/A	MAS = 10.00 (m)	26.00	26.00				WRP	
	9866.12	32.81	9863.57	9833.31	184971.59	MAS = 10.00 (m)	50.00	50.00				MinPts	
	9908.97	372.18	9660.02	9536.79	40.20	OSF1.50	5050.00	5050.00				MinPts	
	9909.81	372.26	9660.80	9537.55	40.19	OSF1.50	5170.00	5170.00				MinPt-O-SF	
	11934.30	303.24	11731.31	11631.07	59.51	OSF1.50	12502.59	12291.21				MinPt-O-SF	
	7934.01	260.13	7759.76	7673.88	46.18	OSF1.50	21460.00	12303.17				MinPt-CtCt	
	7934.73	262.24	7759.07	7672.49	45.81	OSF1.50	21570.00	12302.70				MINPT-O-EOU	
	7935.56	263.22	7759.25	7672.35	45.64	OSF1.50	21620.00	12302.48				MinPt-O-ADP	
	7967.94	275.33	7783.55	7692.61	43.79	OSF1.50	22197.55	12300.00				MinPt-O-SF	

Schlumberger

Cimarex Dos Equis 11-14 Federal Com 63H Rev0 RM 26Aug19 Proposal
Geodetic Report
(Non-Def Plan)

Report Date:	August 27, 2019 - 01:17 PM	**Survey / DLS Computation:**	Minimum Curvature / Lubinski
Client:	Cimarex Energy	**Vertical Section Azimuth:**	179.657 ° (Grid North)
Field:	NM Lea County (NAD 83)	**Vertical Section Origin:**	0.000 ft, 0.000 ft
Structure / Slot:	Cimarex Dos Equis 11-14 Federal Com 63H / New Slot	**TVD Reference Datum:**	RKB
Well:	Dos Equis 11-14 Federal Com 63H	**TVD Reference Elevation:**	3628.800 ft above MSL
Borehole:	Dos Equis 11-14 Federal Com 63H	**Seabed / Ground Elevation:**	3602.800 ft above MSL
UWI / API#:	Unknown / Unknown	**Magnetic Declination:**	6.670 °
Survey Name:	Cimarex Dos Equis 11-14 Federal Com 63H Rev0 RM 26Aug19	**Total Gravity Field Strength:**	998.4379mgn (9.80665 Based)
Survey Date:	August 26, 2019	**Gravity Model:**	GARM
Tort / AHD / DDI / ERD Ratio:	106.471 ° / 10143.984 ft / 6.288 / 0.822	**Total Magnetic Field Strength:**	47893.881 nT
Coordinate Reference System:	NAD83 New Mexico State Plane, Eastern Zone, US Feet	**Magnetic Dip Angle:**	59.899 °
Location Lat / Long:	N 32° 14' 18.15525", W 103° 38' 26.22650"	**Declination Date:**	August 26, 2019
Location Grid N/E Y/X:	N 451145.590 ftUS, E 755515.690 ftUS	**Magnetic Declination Model:**	HDGM 2019
CRS Grid Convergence Angle:	0.3695 °	**North Reference:**	Grid North
Grid Scale Factor:	0.99996163	**Grid Convergence Used:**	0.3695 °
Version / Patch:	2.10.760.0	**Total Corr Mag North->Grid North:**	6.3003 °
		Local Coord Referenced To:	Well Head

Comments	MD (ft)	Incl (°)	Azim Grid (°)	TVD (ft)	VSEC (ft)	NS (ft)	EW (ft)	DLS (°/100ft)	Northing (ftUS)	Easting (ftUS)	Latitude (N/S ° ' ")	Longitude (E/W ° ' ")
SHL [384' FNL, 1176' FEL]	0.00	0.00	180.69	0.00	0.00	0.00	0.00	N/A	451145.59	755515.69	N 32 14 18.16	W 103 38 26.23
	100.00	0.00	231.29	100.00	0.00	0.00	0.00	0.00	451145.59	755515.69	N 32 14 18.16	W 103 38 26.23
	200.00	0.00	231.29	200.00	0.00	0.00	0.00	0.00	451145.59	755515.69	N 32 14 18.16	W 103 38 26.23
	300.00	0.00	231.29	300.00	0.00	0.00	0.00	0.00	451145.59	755515.69	N 32 14 18.16	W 103 38 26.23
	400.00	0.00	231.29	400.00	0.00	0.00	0.00	0.00	451145.59	755515.69	N 32 14 18.16	W 103 38 26.23
	500.00	0.00	231.29	500.00	0.00	0.00	0.00	0.00	451145.59	755515.69	N 32 14 18.16	W 103 38 26.23
	600.00	0.00	231.29	600.00	0.00	0.00	0.00	0.00	451145.59	755515.69	N 32 14 18.16	W 103 38 26.23
	700.00	0.00	231.29	700.00	0.00	0.00	0.00	0.00	451145.59	755515.69	N 32 14 18.16	W 103 38 26.23
	800.00	0.00	231.29	800.00	0.00	0.00	0.00	0.00	451145.59	755515.69	N 32 14 18.16	W 103 38 26.23
	900.00	0.00	231.29	900.00	0.00	0.00	0.00	0.00	451145.59	755515.69	N 32 14 18.16	W 103 38 26.23
	1000.00	0.00	231.29	1000.00	0.00	0.00	0.00	0.00	451145.59	755515.69	N 32 14 18.16	W 103 38 26.23
	1100.00	0.00	231.29	1100.00	0.00	0.00	0.00	0.00	451145.59	755515.69	N 32 14 18.16	W 103 38 26.23
Rustler	*1166.00*	*0.00*	*231.29*	*1166.00*	*0.00*	*0.00*	*0.00*	*0.00*	*451145.59*	*755515.69*	*N 32 14 18.16*	*W 103 38 26.23*
	1200.00	0.00	231.29	1200.00	0.00	0.00	0.00	0.00	451145.59	755515.69	N 32 14 18.16	W 103 38 26.23
	1300.00	0.00	231.29	1300.00	0.00	0.00	0.00	0.00	451145.59	755515.69	N 32 14 18.16	W 103 38 26.23
Salado (Top Salt)	*1390.00*	*0.00*	*231.29*	*1390.00*	*0.00*	*0.00*	*0.00*	*0.00*	*451145.59*	*755515.69*	*N 32 14 18.16*	*W 103 38 26.23*
	1400.00	0.00	231.29	1400.00	0.00	0.00	0.00	0.00	451145.59	755515.69	N 32 14 18.16	W 103 38 26.23
	1500.00	0.00	231.29	1500.00	0.00	0.00	0.00	0.00	451145.59	755515.69	N 32 14 18.16	W 103 38 26.23
	1600.00	0.00	231.29	1600.00	0.00	0.00	0.00	0.00	451145.59	755515.69	N 32 14 18.16	W 103 38 26.23
	1700.00	0.00	231.29	1700.00	0.00	0.00	0.00	0.00	451145.59	755515.69	N 32 14 18.16	W 103 38 26.23
	1800.00	0.00	231.29	1800.00	0.00	0.00	0.00	0.00	451145.59	755515.69	N 32 14 18.16	W 103 38 26.23
	1900.00	0.00	231.29	1900.00	0.00	0.00	0.00	0.00	451145.59	755515.69	N 32 14 18.16	W 103 38 26.23
	2000.00	0.00	231.29	2000.00	0.00	0.00	0.00	0.00	451145.59	755515.69	N 32 14 18.16	W 103 38 26.23
	2100.00	0.00	231.29	2100.00	0.00	0.00	0.00	0.00	451145.59	755515.69	N 32 14 18.16	W 103 38 26.23
	2200.00	0.00	231.29	2200.00	0.00	0.00	0.00	0.00	451145.59	755515.69	N 32 14 18.16	W 103 38 26.23
	2300.00	0.00	231.29	2300.00	0.00	0.00	0.00	0.00	451145.59	755515.69	N 32 14 18.16	W 103 38 26.23
	2400.00	0.00	231.29	2400.00	0.00	0.00	0.00	0.00	451145.59	755515.69	N 32 14 18.16	W 103 38 26.23
	2500.00	0.00	231.29	2500.00	0.00	0.00	0.00	0.00	451145.59	755515.69	N 32 14 18.16	W 103 38 26.23
	2600.00	0.00	231.29	2600.00	0.00	0.00	0.00	0.00	451145.59	755515.69	N 32 14 18.16	W 103 38 26.23
	2700.00	0.00	231.29	2700.00	0.00	0.00	0.00	0.00	451145.59	755515.69	N 32 14 18.16	W 103 38 26.23
	2800.00	0.00	231.29	2800.00	0.00	0.00	0.00	0.00	451145.59	755515.69	N 32 14 18.16	W 103 38 26.23
	2900.00	0.00	231.29	2900.00	0.00	0.00	0.00	0.00	451145.59	755515.69	N 32 14 18.16	W 103 38 26.23
	3000.00	0.00	231.29	3000.00	0.00	0.00	0.00	0.00	451145.59	755515.69	N 32 14 18.16	W 103 38 26.23
	3100.00	0.00	231.29	3100.00	0.00	0.00	0.00	0.00	451145.59	755515.69	N 32 14 18.16	W 103 38 26.23
	3200.00	0.00	231.29	3200.00	0.00	0.00	0.00	0.00	451145.59	755515.69	N 32 14 18.16	W 103 38 26.23
	3300.00	0.00	231.29	3300.00	0.00	0.00	0.00	0.00	451145.59	755515.69	N 32 14 18.16	W 103 38 26.23
	3400.00	0.00	231.29	3400.00	0.00	0.00	0.00	0.00	451145.59	755515.69	N 32 14 18.16	W 103 38 26.23
	3500.00	0.00	231.29	3500.00	0.00	0.00	0.00	0.00	451145.59	755515.69	N 32 14 18.16	W 103 38 26.23
	3600.00	0.00	231.29	3600.00	0.00	0.00	0.00	0.00	451145.59	755515.69	N 32 14 18.16	W 103 38 26.23
	3700.00	0.00	231.29	3700.00	0.00	0.00	0.00	0.00	451145.59	755515.69	N 32 14 18.16	W 103 38 26.23
	3800.00	0.00	231.29	3800.00	0.00	0.00	0.00	0.00	451145.59	755515.69	N 32 14 18.16	W 103 38 26.23
	3900.00	0.00	231.29	3900.00	0.00	0.00	0.00	0.00	451145.59	755515.69	N 32 14 18.16	W 103 38 26.23
	4000.00	0.00	231.29	4000.00	0.00	0.00	0.00	0.00	451145.59	755515.69	N 32 14 18.16	W 103 38 26.23
	4100.00	0.00	231.29	4100.00	0.00	0.00	0.00	0.00	451145.59	755515.69	N 32 14 18.16	W 103 38 26.23
	4200.00	0.00	231.29	4200.00	0.00	0.00	0.00	0.00	451145.59	755515.69	N 32 14 18.16	W 103 38 26.23
	4300.00	0.00	231.29	4300.00	0.00	0.00	0.00	0.00	451145.59	755515.69	N 32 14 18.16	W 103 38 26.23
	4400.00	0.00	231.29	4400.00	0.00	0.00	0.00	0.00	451145.59	755515.69	N 32 14 18.16	W 103 38 26.23
	4500.00	0.00	231.29	4500.00	0.00	0.00	0.00	0.00	451145.59	755515.69	N 32 14 18.16	W 103 38 26.23
	4600.00	0.00	231.29	4600.00	0.00	0.00	0.00	0.00	451145.59	755515.69	N 32 14 18.16	W 103 38 26.23
Base Salt	*4684.00*	*0.00*	*231.29*	*4684.00*	*0.00*	*0.00*	*0.00*	*0.00*	*451145.59*	*755515.69*	*N 32 14 18.16*	*W 103 38 26.23*
	4700.00	0.00	231.29	4700.00	0.00	0.00	0.00	0.00	451145.59	755515.69	N 32 14 18.16	W 103 38 26.23
	4800.00	0.00	231.29	4800.00	0.00	0.00	0.00	0.00	451145.59	755515.69	N 32 14 18.16	W 103 38 26.23
	4900.00	0.00	231.29	4900.00	0.00	0.00	0.00	0.00	451145.59	755515.69	N 32 14 18.16	W 103 38 26.23
Lamar	*4910.00*	*0.00*	*231.29*	*4910.00*	*0.00*	*0.00*	*0.00*	*0.00*	*451145.59*	*755515.69*	*N 32 14 18.16*	*W 103 38 26.23*
Bell Canyon	*4965.00*	*0.00*	*231.29*	*4965.00*	*0.00*	*0.00*	*0.00*	*0.00*	*451145.59*	*755515.69*	*N 32 14 18.16*	*W 103 38 26.23*
	5000.00	0.00	231.29	5000.00	0.00	0.00	0.00	0.00	451145.59	755515.69	N 32 14 18.16	W 103 38 26.23
	5100.00	0.00	231.29	5100.00	0.00	0.00	0.00	0.00	451145.59	755515.69	N 32 14 18.16	W 103 38 26.23
	5200.00	0.00	231.29	5200.00	0.00	0.00	0.00	0.00	451145.59	755515.69	N 32 14 18.16	W 103 38 26.23
	5300.00	0.00	231.29	5300.00	0.00	0.00	0.00	0.00	451145.59	755515.69	N 32 14 18.16	W 103 38 26.23
	5400.00	0.00	231.29	5400.00	0.00	0.00	0.00	0.00	451145.59	755515.69	N 32 14 18.16	W 103 38 26.23
	5500.00	0.00	231.29	5500.00	0.00	0.00	0.00	0.00	451145.59	755515.69	N 32 14 18.16	W 103 38 26.23
	5600.00	0.00	231.29	5600.00	0.00	0.00	0.00	0.00	451145.59	755515.69	N 32 14 18.16	W 103 38 26.23
	5700.00	0.00	231.29	5700.00	0.00	0.00	0.00	0.00	451145.59	755515.69	N 32 14 18.16	W 103 38 26.23
	5800.00	0.00	231.29	5800.00	0.00	0.00	0.00	0.00	451145.59	755515.69	N 32 14 18.16	W 103 38 26.23
Cherry Canyon	*5858.00*	*0.00*	*231.29*	*5858.00*	*0.00*	*0.00*	*0.00*	*0.00*	*451145.59*	*755515.69*	*N 32 14 18.16*	*W 103 38 26.23*
	5900.00	0.00	231.29	5900.00	0.00	0.00	0.00	0.00	451145.59	755515.69	N 32 14 18.16	W 103 38 26.23
	6000.00	0.00	231.29	6000.00	0.00	0.00	0.00	0.00	451145.59	755515.69	N 32 14 18.16	W 103 38 26.23
	6100.00	0.00	231.29	6100.00	0.00	0.00	0.00	0.00	451145.59	755515.69	N 32 14 18.16	W 103 38 26.23
	6200.00	0.00	231.29	6200.00	0.00	0.00	0.00	0.00	451145.59	755515.69	N 32 14 18.16	W 103 38 26.23
	6300.00	0.00	231.29	6300.00	0.00	0.00	0.00	0.00	451145.59	755515.69	N 32 14 18.16	W 103 38 26.23
	6400.00	0.00	231.29	6400.00	0.00	0.00	0.00	0.00	451145.59	755515.69	N 32 14 18.16	W 103 38 26.23
	6500.00	0.00	231.29	6500.00	0.00	0.00	0.00	0.00	451145.59	755515.69	N 32 14 18.16	W 103 38 26.23
	6600.00	0.00	231.29	6600.00	0.00	0.00	0.00	0.00	451145.59	755515.69	N 32 14 18.16	W 103 38 26.23
	6700.00	0.00	231.29	6700.00	0.00	0.00	0.00	0.00	451145.59	755515.69	N 32 14 18.16	W 103 38 26.23
	6800.00	0.00	231.29	6800.00	0.00	0.00	0.00	0.00	451145.59	755515.69	N 32 14 18.16	W 103 38 26.23
	6900.00	0.00	231.29	6900.00	0.00	0.00	0.00	0.00	451145.59	755515.69	N 32 14 18.16	W 103 38 26.23

Comments	MD (ft)	Incl (°)	Azim Grid (°)	TVD (ft)	VSEC (ft)	NS (ft)	EW (ft)	DLS (°/100ft)	Northing (ftUS)	Easting (ftUS)	Latitude (N/S ° ' ")	Longitude (E/W ° ' ")
	7000.00	0.00	231.29	7000.00	0.00	0.00	0.00	0.00	451145.59	755515.69	N 32 14 18.16	W 103 38 26.23
	7100.00	0.00	231.29	7100.00	0.00	0.00	0.00	0.00	451145.59	755515.69	N 32 14 18.16	W 103 38 26.23
	7200.00	0.00	231.29	7200.00	0.00	0.00	0.00	0.00	451145.59	755515.69	N 32 14 18.16	W 103 38 26.23
Brushy Canyon	*7222.00*	*0.00*	*231.29*	*7222.00*	*0.00*	*0.00*	*0.00*	*0.00*	*451145.59*	*755515.69*	*N 32 14 18.16*	*W 103 38 26.23*
	7300.00	0.00	231.29	7300.00	0.00	0.00	0.00	0.00	451145.59	755515.69	N 32 14 18.16	W 103 38 26.23
	7400.00	0.00	231.29	7400.00	0.00	0.00	0.00	0.00	451145.59	755515.69	N 32 14 18.16	W 103 38 26.23
	7500.00	0.00	231.29	7500.00	0.00	0.00	0.00	0.00	451145.59	755515.69	N 32 14 18.16	W 103 38 26.23
	7600.00	0.00	231.29	7600.00	0.00	0.00	0.00	0.00	451145.59	755515.69	N 32 14 18.16	W 103 38 26.23
	7700.00	0.00	231.29	7700.00	0.00	0.00	0.00	0.00	451145.59	755515.69	N 32 14 18.16	W 103 38 26.23
	7800.00	0.00	231.29	7800.00	0.00	0.00	0.00	0.00	451145.59	755515.69	N 32 14 18.16	W 103 38 26.23
	7900.00	0.00	231.29	7900.00	0.00	0.00	0.00	0.00	451145.59	755515.69	N 32 14 18.16	W 103 38 26.23
	8000.00	0.00	231.29	8000.00	0.00	0.00	0.00	0.00	451145.59	755515.69	N 32 14 18.16	W 103 38 26.23
	8100.00	0.00	231.29	8100.00	0.00	0.00	0.00	0.00	451145.59	755515.69	N 32 14 18.16	W 103 38 26.23
	8200.00	0.00	231.29	8200.00	0.00	0.00	0.00	0.00	451145.59	755515.69	N 32 14 18.16	W 103 38 26.23
	8300.00	0.00	231.29	8300.00	0.00	0.00	0.00	0.00	451145.59	755515.69	N 32 14 18.16	W 103 38 26.23
	8400.00	0.00	231.29	8400.00	0.00	0.00	0.00	0.00	451145.59	755515.69	N 32 14 18.16	W 103 38 26.23
	8500.00	0.00	231.29	8500.00	0.00	0.00	0.00	0.00	451145.59	755515.69	N 32 14 18.16	W 103 38 26.23
	8600.00	0.00	231.29	8600.00	0.00	0.00	0.00	0.00	451145.59	755515.69	N 32 14 18.16	W 103 38 26.23
	8700.00	0.00	231.29	8700.00	0.00	0.00	0.00	0.00	451145.59	755515.69	N 32 14 18.16	W 103 38 26.23
Bone Spring	*8779.00*	*0.00*	*231.29*	*8779.00*	*0.00*	*0.00*	*0.00*	*0.00*	*451145.59*	*755515.69*	*N 32 14 18.16*	*W 103 38 26.23*
	8800.00	0.00	231.29	8800.00	0.00	0.00	0.00	0.00	451145.59	755515.69	N 32 14 18.16	W 103 38 26.23
Leonard Shale	*8892.00*	*0.00*	*231.29*	*8892.00*	*0.00*	*0.00*	*0.00*	*0.00*	*451145.59*	*755515.69*	*N 32 14 18.16*	*W 103 38 26.23*
	8900.00	0.00	231.29	8900.00	0.00	0.00	0.00	0.00	451145.59	755515.69	N 32 14 18.16	W 103 38 26.23
	9000.00	0.00	231.29	9000.00	0.00	0.00	0.00	0.00	451145.59	755515.69	N 32 14 18.16	W 103 38 26.23
	9100.00	0.00	231.29	9100.00	0.00	0.00	0.00	0.00	451145.59	755515.69	N 32 14 18.16	W 103 38 26.23
	9200.00	0.00	231.29	9200.00	0.00	0.00	0.00	0.00	451145.59	755515.69	N 32 14 18.16	W 103 38 26.23
Avalon Shale	*9219.00*	*0.00*	*231.29*	*9219.00*	*0.00*	*0.00*	*0.00*	*0.00*	*451145.59*	*755515.69*	*N 32 14 18.16*	*W 103 38 26.23*
	9300.00	0.00	231.29	9300.00	0.00	0.00	0.00	0.00	451145.59	755515.69	N 32 14 18.16	W 103 38 26.23
	9400.00	0.00	231.29	9400.00	0.00	0.00	0.00	0.00	451145.59	755515.69	N 32 14 18.16	W 103 38 26.23
	9500.00	0.00	231.29	9500.00	0.00	0.00	0.00	0.00	451145.59	755515.69	N 32 14 18.16	W 103 38 26.23
	9600.00	0.00	231.29	9600.00	0.00	0.00	0.00	0.00	451145.59	755515.69	N 32 14 18.16	W 103 38 26.23
	9700.00	0.00	231.29	9700.00	0.00	0.00	0.00	0.00	451145.59	755515.69	N 32 14 18.16	W 103 38 26.23
	9800.00	0.00	231.29	9800.00	0.00	0.00	0.00	0.00	451145.59	755515.69	N 32 14 18.16	W 103 38 26.23
	9900.00	0.00	231.29	9900.00	0.00	0.00	0.00	0.00	451145.59	755515.69	N 32 14 18.16	W 103 38 26.23
1st Bone Spring Sand	*9944.00*	*0.00*	*231.29*	*9944.00*	*0.00*	*0.00*	*0.00*	*0.00*	*451145.59*	*755515.69*	*N 32 14 18.16*	*W 103 38 26.23*
	10000.00	0.00	231.29	10000.00	0.00	0.00	0.00	0.00	451145.59	755515.69	N 32 14 18.16	W 103 38 26.23
	10100.00	0.00	231.29	10100.00	0.00	0.00	0.00	0.00	451145.59	755515.69	N 32 14 18.16	W 103 38 26.23
2nd Bone Spring Carb	*10108.00*	*0.00*	*231.29*	*10108.00*	*0.00*	*0.00*	*0.00*	*0.00*	*451145.59*	*755515.69*	*N 32 14 18.16*	*W 103 38 26.23*
	10200.00	0.00	231.29	10200.00	0.00	0.00	0.00	0.00	451145.59	755515.69	N 32 14 18.16	W 103 38 26.23
	10300.00	0.00	231.29	10300.00	0.00	0.00	0.00	0.00	451145.59	755515.69	N 32 14 18.16	W 103 38 26.23
	10400.00	0.00	231.29	10400.00	0.00	0.00	0.00	0.00	451145.59	755515.69	N 32 14 18.16	W 103 38 26.23
2nd Bone Spring Sand	*10478.00*	*0.00*	*231.29*	*10478.00*	*0.00*	*0.00*	*0.00*	*0.00*	*451145.59*	*755515.69*	*N 32 14 18.16*	*W 103 38 26.23*
	10500.00	0.00	231.29	10500.00	0.00	0.00	0.00	0.00	451145.59	755515.69	N 32 14 18.16	W 103 38 26.23
	10600.00	0.00	231.29	10600.00	0.00	0.00	0.00	0.00	451145.59	755515.69	N 32 14 18.16	W 103 38 26.23
	10700.00	0.00	231.29	10700.00	0.00	0.00	0.00	0.00	451145.59	755515.69	N 32 14 18.16	W 103 38 26.23
	10800.00	0.00	231.29	10800.00	0.00	0.00	0.00	0.00	451145.59	755515.69	N 32 14 18.16	W 103 38 26.23
	10900.00	0.00	231.29	10900.00	0.00	0.00	0.00	0.00	451145.59	755515.69	N 32 14 18.16	W 103 38 26.23
	11000.00	0.00	231.29	11000.00	0.00	0.00	0.00	0.00	451145.59	755515.69	N 32 14 18.16	W 103 38 26.23
3rd Bone Spring Carb	*11036.00*	*0.00*	*231.29*	*11036.00*	*0.00*	*0.00*	*0.00*	*0.00*	*451145.59*	*755515.69*	*N 32 14 18.16*	*W 103 38 26.23*
	11100.00	0.00	231.29	11100.00	0.00	0.00	0.00	0.00	451145.59	755515.69	N 32 14 18.16	W 103 38 26.23
	11200.00	0.00	231.29	11200.00	0.00	0.00	0.00	0.00	451145.59	755515.69	N 32 14 18.16	W 103 38 26.23
	11300.00	0.00	231.29	11300.00	0.00	0.00	0.00	0.00	451145.59	755515.69	N 32 14 18.16	W 103 38 26.23
	11400.00	0.00	231.29	11400.00	0.00	0.00	0.00	0.00	451145.59	755515.69	N 32 14 18.16	W 103 38 26.23
	11500.00	0.00	231.29	11500.00	0.00	0.00	0.00	0.00	451145.59	755515.69	N 32 14 18.16	W 103 38 26.23
	11600.00	0.00	231.29	11600.00	0.00	0.00	0.00	0.00	451145.59	755515.69	N 32 14 18.16	W 103 38 26.23
	11700.00	0.00	231.29	11700.00	0.00	0.00	0.00	0.00	451145.59	755515.69	N 32 14 18.16	W 103 38 26.23
KOP - Build 12°/100' DLS	11742.38	0.00	231.29	11742.38	0.00	0.00	0.00	0.00	451145.59	755515.69	N 32 14 18.16	W 103 38 26.23
	11800.00	6.91	231.29	11799.86	2.16	-2.17	-2.71	12.00	451143.42	755512.98	N 32 14 18.13	W 103 38 26.26
3rd Bone Spring Sand	*11845.81*	*12.41*	*231.29*	*11845.00*	*6.93*	*-6.98*	*-8.71*	*12.00*	*451138.61*	*755506.98*	*N 32 14 18.09*	*W 103 38 26.33*
	11900.00	18.91	231.29	11897.15	16.00	-16.12	-20.12	12.00	451129.47	755495.57	N 32 14 18.00	W 103 38 26.46
	12000.00	30.91	231.29	11987.68	42.11	-42.42	-52.93	12.00	451103.17	755462.77	N 32 14 17.74	W 103 38 26.85
Build & Turn 12°/100' DLS	12034.05	35.00	231.29	12016.24	53.60	-54.01	-67.37	12.00	451091.59	755448.32	N 32 14 17.63	W 103 38 27.01
	12100.00	38.85	219.75	12069.02	81.21	-81.79	-95.41	12.00	451063.81	755420.29	N 32 14 17.35	W 103 38 27.34
	12200.00	46.40	205.91	12142.71	137.89	-138.68	-131.42	12.00	451006.92	755384.28	N 32 14 16.79	W 103 38 27.77
	12300.00	55.23	195.39	12205.94	210.16	-211.11	-158.23	12.00	450934.49	755357.46	N 32 14 16.08	W 103 38 28.08
Wolfcamp	*12340.66*	*59.05*	*191.77*	*12228.00*	*243.30*	*-244.30*	*-166.23*	*12.00*	*450901.30*	*755349.47*	*N 32 14 15.75*	*W 103 38 28.18*
	12400.00	64.78	186.98	12255.94	294.87	-295.92	-174.69	12.00	450849.68	755341.00	N 32 14 15.24	W 103 38 28.28
	12500.00	74.74	179.83	12290.53	388.31	-389.40	-180.07	12.00	450756.21	755335.63	N 32 14 14.31	W 103 38 28.35
Build 4°/100' DLS	12502.59	75.00	179.66	12291.21	390.81	-391.89	-180.06	12.00	450753.71	755335.64	N 32 14 14.29	W 103 38 28.35
	12600.00	78.90	179.66	12313.20	485.69	-486.77	-179.49	4.00	450658.84	755336.21	N 32 14 13.35	W 103 38 28.35
Wolfcamp Y SS	*12684.36*	*82.27*	*179.66*	*12327.00*	*568.90*	*-569.98*	*-178.99*	*4.00*	*450575.63*	*755336.71*	*N 32 14 12.53*	*W 103 38 28.35*
	12700.00	82.90	179.66	12329.02	584.41	-585.49	-178.90	4.00	450560.13	755336.80	N 32 14 12.37	W 103 38 28.35
	12800.00	86.90	179.66	12337.91	683.99	-685.07	-178.30	4.00	450460.55	755337.40	N 32 14 11.39	W 103 38 28.35
Wolfcamp Y SS Target	*12871.43*	*89.75*	*179.66*	*12340.00*	*755.38*	*-756.46*	*-177.87*	*4.00*	*450389.16*	*755337.82*	*N 32 14 10.68*	*W 103 38 28.35*
Wolfcamp Y SS Target Landing Point	12883.74	90.25	179.66	12340.00	767.69	-768.77	-177.80	4.00	450376.85	755337.90	N 32 14 10.56	W 103 38 28.35
	12900.00	90.25	179.66	12339.93	783.95	-785.03	-177.70	0.00	450360.59	755337.99	N 32 14 10.40	W 103 38 28.35
	13000.00	90.25	179.66	12339.50	883.95	-885.03	-177.10	0.00	450260.60	755338.59	N 32 14 9.41	W 103 38 28.35
	13100.00	90.25	179.66	12339.07	983.95	-985.02	-176.51	0.00	450160.61	755339.19	N 32 14 8.42	W 103 38 28.36
	13200.00	90.25	179.66	12338.64	1083.95	-1085.02	-175.91	0.00	450060.61	755339.79	N 32 14 7.43	W 103 38 28.36
	13300.00	90.25	179.66	12338.21	1183.95	-1185.02	-175.31	0.00	449960.62	755340.39	N 32 14 6.44	W 103 38 28.36
	13400.00	90.25	179.66	12337.78	1283.95	-1285.02	-174.71	0.00	449860.63	755340.99	N 32 14 5.45	W 103 38 28.36
	13500.00	90.25	179.66	12337.35	1383.95	-1385.01	-174.11	0.00	449760.63	755341.59	N 32 14 4.46	W 103 38 28.36
	13600.00	90.25	179.66	12336.92	1483.95	-1485.01	-173.51	0.00	449660.64	755342.18	N 32 14 3.47	W 103 38 28.36
	13700.00	90.25	179.66	12336.49	1583.94	-1585.01	-172.91	0.00	449560.65	755342.78	N 32 14 2.48	W 103 38 28.36
	13800.00	90.25	179.66	12336.06	1683.94	-1685.01	-172.32	0.00	449460.65	755343.38	N 32 14 1.49	W 103 38 28.36
	13900.00	90.25	179.66	12335.64	1783.94	-1785.00	-171.72	0.00	449360.66	755343.98	N 32 14 0.50	W 103 38 28.36
	14000.00	90.25	179.66	12335.21	1883.94	-1885.00	-171.12	0.00	449260.67	755344.58	N 32 13 59.51	W 103 38 28.36
	14100.00	90.25	179.66	12334.78	1983.94	-1985.00	-170.52	0.00	449160.67	755345.18	N 32 13 58.52	W 103 38 28.36
	14200.00	90.25	179.66	12334.35	2083.94	-2084.99	-169.92	0.00	449060.68	755345.78	N 32 13 57.54	W 103 38 28.36
	14300.00	90.25	179.66	12333.92	2183.94	-2184.99	-169.32	0.00	448960.69	755346.37	N 32 13 56.55	W 103 38 28.36
NMNM0002889 - NMNM0001917 Crossing	*14374.30*	*90.25*	*179.66*	*12333.60*	*2258.24*	*-2259.29*	*-168.88*	*0.00*	*448886.39*	*755346.82*	*N 32 13 55.81*	*W 103 38 28.36*
	14400.00	90.25	179.66	12333.49	2283.94	-2284.99	-168.72	0.00	448860.69	755346.97	N 32 13 55.56	W 103 38 28.36
	14500.00	90.25	179.66	12333.06	2383.94	-2384.99	-168.13	0.00	448760.70	755347.57	N 32 13 54.57	W 103 38 28.36
	14600.00	90.25	179.66	12332.63	2483.94	-2484.98	-167.53	0.00	448660.71	755348.17	N 32 13 53.58	W 103 38 28.36

Comments	MD (ft)	Incl (°)	Azim Grid (°)	TVD (ft)	VSEC (ft)	NS (ft)	EW (ft)	DLS (°/100ft)	Northing (ftUS)	Easting (ftUS)	Latitude (N/S ° ' ")	Longitude (E/W ° ' ")
	14700.00	90.25	179.66	12332.20	2583.94	-2584.98	-166.93	0.00	448560.71	755348.77	N 32 13 52.59	W 103 38 28.36
	14800.00	90.25	179.66	12331.77	2683.93	-2684.98	-166.33	0.00	448460.72	755349.37	N 32 13 51.60	W 103 38 28.36
	14900.00	90.25	179.66	12331.34	2783.93	-2784.98	-165.73	0.00	448360.73	755349.97	N 32 13 50.61	W 103 38 28.36
	15000.00	90.25	179.66	12330.91	2883.93	-2884.97	-165.13	0.00	448260.73	755350.56	N 32 13 49.62	W 103 38 28.37
	15100.00	90.25	179.66	12330.48	2983.93	-2984.97	-164.53	0.00	448160.74	755351.16	N 32 13 48.63	W 103 38 28.37
	15200.00	90.25	179.66	12330.05	3083.93	-3084.97	-163.93	0.00	448060.75	755351.76	N 32 13 47.64	W 103 38 28.37
	15300.00	90.25	179.66	12329.62	3183.93	-3184.96	-163.34	0.00	447960.75	755352.36	N 32 13 46.65	W 103 38 28.37
	15400.00	90.25	179.66	12329.19	3283.93	-3284.96	-162.74	0.00	447860.76	755352.96	N 32 13 45.66	W 103 38 28.37
	15500.00	90.25	179.66	12328.76	3383.93	-3384.96	-162.14	0.00	447760.77	755353.56	N 32 13 44.67	W 103 38 28.37
	15600.00	90.25	179.66	12328.33	3483.93	-3484.96	-161.54	0.00	447660.77	755354.16	N 32 13 43.68	W 103 38 28.37
	15700.00	90.25	179.66	12327.91	3583.93	-3584.95	-160.94	0.00	447560.78	755354.75	N 32 13 42.69	W 103 38 28.37
	15800.00	90.25	179.66	12327.48	3683.93	-3684.95	-160.34	0.00	447460.79	755355.35	N 32 13 41.70	W 103 38 28.37
	15900.00	90.25	179.66	12327.05	3783.92	-3784.95	-159.74	0.00	447360.79	755355.95	N 32 13 40.71	W 103 38 28.37
Wolfcamp Y SS	*15910.73*	*90.25*	*179.66*	*12327.00*	*3794.65*	*-3795.68*	*-159.68*	*0.00*	*447350.07*	*755356.02*	*N 32 13 40.61*	*W 103 38 28.37*
	16000.00	90.25	179.66	12326.62	3883.92	-3884.95	-159.15	0.00	447260.80	755356.55	N 32 13 39.72	W 103 38 28.37
	16100.00	90.25	179.66	12326.19	3983.92	-3984.94	-158.55	0.00	447160.81	755357.15	N 32 13 38.73	W 103 38 28.37
	16200.00	90.25	179.66	12325.76	4083.92	-4084.94	-157.95	0.00	447060.81	755357.75	N 32 13 37.75	W 103 38 28.37
	16300.00	90.25	179.66	12325.33	4183.92	-4184.94	-157.35	0.00	446960.82	755358.35	N 32 13 36.76	W 103 38 28.37
	16400.00	90.25	179.66	12324.90	4283.92	-4284.93	-156.75	0.00	446860.83	755358.95	N 32 13 35.77	W 103 38 28.37
	16500.00	90.25	179.66	12324.47	4383.92	-4384.93	-156.15	0.00	446760.83	755359.54	N 32 13 34.78	W 103 38 28.37
	16600.00	90.25	179.66	12324.04	4483.92	-4484.93	-155.55	0.00	446660.84	755360.14	N 32 13 33.79	W 103 38 28.37
	16700.00	90.25	179.66	12323.61	4583.92	-4584.93	-154.96	0.00	446560.85	755360.74	N 32 13 32.80	W 103 38 28.37
	16800.00	90.25	179.66	12323.18	4683.92	-4684.92	-154.36	0.00	446460.86	755361.34	N 32 13 31.81	W 103 38 28.37
	16900.00	90.25	179.66	12322.75	4783.92	-4784.92	-153.76	0.00	446360.86	755361.94	N 32 13 30.82	W 103 38 28.38
	17000.00	90.25	179.66	12322.32	4883.91	-4884.92	-153.16	0.00	446260.87	755362.54	N 32 13 29.83	W 103 38 28.38
NMNM0001917 - NMNM0033503 Crossing	*17024.90*	*90.25*	*179.66*	*12322.21*	*4908.81*	*-4909.82*	*-153.01*	*0.00*	*446235.97*	*755362.69*	*N 32 13 29.58*	*W 103 38 28.38*
	17100.00	90.25	179.66	12321.89	4983.91	-4984.92	-152.56	0.00	446160.88	755363.14	N 32 13 28.84	W 103 38 28.38
	17200.00	90.25	179.66	12321.46	5083.91	-5084.91	-151.96	0.00	446060.88	755363.73	N 32 13 27.85	W 103 38 28.38
	17300.00	90.25	179.66	12321.03	5183.91	-5184.91	-151.36	0.00	445960.89	755364.33	N 32 13 26.86	W 103 38 28.38
	17400.00	90.25	179.66	12320.60	5283.91	-5284.91	-150.76	0.00	445860.90	755364.93	N 32 13 25.87	W 103 38 28.38
	17500.00	90.25	179.66	12320.17	5383.91	-5384.90	-150.17	0.00	445760.90	755365.53	N 32 13 24.88	W 103 38 28.38
	17600.00	90.25	179.66	12319.75	5483.91	-5484.90	-149.57	0.00	445660.91	755366.13	N 32 13 23.89	W 103 38 28.38
	17700.00	90.25	179.66	12319.32	5583.91	-5584.90	-148.97	0.00	445560.92	755366.73	N 32 13 22.90	W 103 38 28.38
	17800.00	90.25	179.66	12318.89	5683.91	-5684.90	-148.37	0.00	445460.92	755367.33	N 32 13 21.91	W 103 38 28.38
	17900.00	90.25	179.66	12318.46	5783.91	-5784.89	-147.77	0.00	445360.93	755367.92	N 32 13 20.92	W 103 38 28.38
	18000.00	90.25	179.66	12318.03	5883.90	-5884.89	-147.17	0.00	445260.94	755368.52	N 32 13 19.93	W 103 38 28.38
	18100.00	90.25	179.66	12317.60	5983.90	-5984.89	-146.57	0.00	445160.94	755369.12	N 32 13 18.94	W 103 38 28.38
	18200.00	90.25	179.66	12317.17	6083.90	-6084.89	-145.98	0.00	445060.95	755369.72	N 32 13 17.96	W 103 38 28.38
	18300.00	90.25	179.66	12316.74	6183.90	-6184.88	-145.38	0.00	444960.96	755370.32	N 32 13 16.97	W 103 38 28.38
	18400.00	90.25	179.66	12316.31	6283.90	-6284.88	-144.78	0.00	444860.96	755370.92	N 32 13 15.98	W 103 38 28.38
	18500.00	90.25	179.66	12315.88	6383.90	-6384.88	-144.18	0.00	444760.97	755371.52	N 32 13 14.99	W 103 38 28.38
	18600.00	90.25	179.66	12315.45	6483.90	-6484.88	-143.58	0.00	444660.98	755372.11	N 32 13 14.00	W 103 38 28.38
	18700.00	90.25	179.66	12315.02	6583.90	-6584.87	-142.98	0.00	444560.98	755372.71	N 32 13 13.01	W 103 38 28.39
	18800.00	90.25	179.66	12314.59	6683.90	-6684.87	-142.38	0.00	444460.99	755373.31	N 32 13 12.02	W 103 38 28.39
	18900.00	90.25	179.66	12314.16	6783.90	-6784.87	-141.79	0.00	444361.00	755373.91	N 32 13 11.03	W 103 38 28.39
	19000.00	90.25	179.66	12313.73	6883.90	-6884.86	-141.19	0.00	444261.00	755374.51	N 32 13 10.04	W 103 38 28.39
	19100.00	90.25	179.66	12313.30	6983.89	-6984.86	-140.59	0.00	444161.01	755375.11	N 32 13 9.05	W 103 38 28.39
	19200.00	90.25	179.66	12312.87	7083.89	-7084.86	-139.99	0.00	444061.02	755375.71	N 32 13 8.06	W 103 38 28.39
	19300.00	90.25	179.66	12312.44	7183.89	-7184.86	-139.39	0.00	443961.02	755376.30	N 32 13 7.07	W 103 38 28.39
	19400.00	90.25	179.66	12312.01	7283.89	-7284.85	-138.79	0.00	443861.03	755376.90	N 32 13 6.08	W 103 38 28.39
	19500.00	90.25	179.66	12311.59	7383.89	-7384.85	-138.19	0.00	443761.04	755377.50	N 32 13 5.09	W 103 38 28.39
	19600.00	90.25	179.66	12311.16	7483.89	-7484.85	-137.59	0.00	443661.04	755378.10	N 32 13 4.10	W 103 38 28.39
	19700.00	90.25	179.66	12310.73	7583.89	-7584.85	-137.00	0.00	443561.05	755378.70	N 32 13 3.11	W 103 38 28.39
	19800.00	90.25	179.66	12310.30	7683.89	-7684.84	-136.40	0.00	443461.06	755379.30	N 32 13 2.12	W 103 38 28.39
	19900.00	90.25	179.66	12309.87	7783.89	-7784.84	-135.80	0.00	443361.06	755379.90	N 32 13 1.13	W 103 38 28.39
	20000.00	90.25	179.66	12309.44	7883.89	-7884.84	-135.20	0.00	443261.07	755380.50	N 32 13 0.14	W 103 38 28.39
	20100.00	90.25	179.66	12309.01	7983.89	-7984.83	-134.60	0.00	443161.08	755381.09	N 32 12 59.15	W 103 38 28.39
	20200.00	90.25	179.66	12308.58	8083.88	-8084.83	-134.00	0.00	443061.08	755381.69	N 32 12 58.16	W 103 38 28.39
	20300.00	90.25	179.66	12308.15	8183.88	-8184.83	-133.40	0.00	442961.09	755382.29	N 32 12 57.18	W 103 38 28.39
	20400.00	90.25	179.66	12307.72	8283.88	-8284.83	-132.81	0.00	442861.10	755382.89	N 32 12 56.19	W 103 38 28.39
	20500.00	90.25	179.66	12307.29	8383.88	-8384.82	-132.21	0.00	442761.10	755383.49	N 32 12 55.20	W 103 38 28.39
	20600.00	90.25	179.66	12306.86	8483.88	-8484.82	-131.61	0.00	442661.11	755384.09	N 32 12 54.21	W 103 38 28.40
	20700.00	90.25	179.66	12306.43	8583.88	-8584.82	-131.01	0.00	442561.12	755384.69	N 32 12 53.22	W 103 38 28.40
	20800.00	90.25	179.66	12306.00	8683.88	-8684.82	-130.41	0.00	442461.13	755385.28	N 32 12 52.23	W 103 38 28.40
	20900.00	90.25	179.66	12305.57	8783.88	-8784.81	-129.81	0.00	442361.13	755385.88	N 32 12 51.24	W 103 38 28.40
	20977.10	*90.25*	*179.66*	*12305.24*	*8860.98*	*-8861.91*	*-129.35*	*0.00*	*442284.04*	*755386.34*	*N 32 12 50.48*	*W 103 38 28.40*
	21000.00	90.25	179.66	12305.14	8883.88	-8884.81	-129.21	0.00	442261.14	755386.48	N 32 12 50.25	W 103 38 28.40
	21100.00	90.25	179.66	12304.71	8983.88	-8984.81	-128.62	0.00	442161.15	755387.08	N 32 12 49.26	W 103 38 28.40
	21200.00	90.25	179.66	12304.28	9083.88	-9084.80	-128.02	0.00	442061.15	755387.68	N 32 12 48.27	W 103 38 28.40
	21300.00	90.25	179.66	12303.85	9183.87	-9184.80	-127.42	0.00	441961.16	755388.28	N 32 12 47.28	W 103 38 28.40
	21400.00	90.25	179.66	12303.43	9283.87	-9284.80	-126.82	0.00	441861.17	755388.88	N 32 12 46.29	W 103 38 28.40
	21500.00	90.25	179.66	12303.00	9383.87	-9384.80	-126.22	0.00	441761.17	755389.47	N 32 12 45.30	W 103 38 28.40
	21600.00	90.25	179.66	12302.57	9483.87	-9484.79	-125.62	0.00	441661.18	755390.07	N 32 12 44.31	W 103 38 28.40
	21700.00	90.25	179.66	12302.14	9583.87	-9584.79	-125.02	0.00	441561.19	755390.67	N 32 12 43.32	W 103 38 28.40
	21800.00	90.25	179.66	12301.71	9683.87	-9684.79	-124.42	0.00	441461.19	755391.27	N 32 12 42.33	W 103 38 28.40
	21900.00	90.25	179.66	12301.28	9783.87	-9784.79	-123.83	0.00	441361.20	755391.87	N 32 12 41.34	W 103 38 28.40
	22000.00	90.25	179.66	12300.85	9883.87	-9884.78	-123.23	0.00	441261.21	755392.47	N 32 12 40.35	W 103 38 28.40
	22100.00	90.25	179.66	12300.42	9983.87	-9984.78	-122.63	0.00	441161.21	755393.07	N 32 12 39.36	W 103 38 28.40
Cimarex Dos Equis 11-14 Federal Com 63H - PBHL [100' FSL, 1356' FEL]	22197.55	90.25	179.66	12300.00	10081.42	-10082.33	-122.04	0.00	441063.67	755393.65	N 32 12 38.40	W 103 38 28.40

Survey Type: Non-Def Plan

Survey Error Model: ISCWSA Rev 0 *** 3-D 95.000% Confidence 2.7955 sigma

Survey Program:

Description	Part	MD From (ft)	MD To (ft)	EOU Freq (ft)	Hole Size (in)	Casing Diameter (in)	Expected Max Inclination (deg)	Survey Tool Type	Borehole / Survey
	1	0.000	26.000	1/100.000	30.000	30.000		NAL_MWD_IFR1+MS-Depth Only	Dos Equis 11-14 Federal Com 63H / Cimarex Dos Equis 11-14 Federal Com 63H Rev0 RM
	1	26.000	22197.550	1/100.000	30.000	30.000		NAL_MWD_IFR1+MS	Dos Equis 11-14 Federal Com 63H / Cimarex Dos Equis 11-14

Schlumberger

Cimarex Dos Equis 11-14 Federal Com 63H Rev0 RM 26Aug19 Proposal
Geodetic Report
(Non-Def Plan)

Report Date:	August 27, 2019 - 01:12 PM	**Survey / DLS Computation:**	Minimum Curvature / Lubinski
Client:	Cimarex Energy	**Vertical Section Azimuth:**	179.657 ° (Grid North)
Field:	NM Lea County (NAD 83)	**Vertical Section Origin:**	0.000 ft, 0.000 ft
Structure / Slot:	Cimarex Dos Equis 11-14 Federal Com 63H / New Slot	**TVD Reference Datum:**	RKB
Well:	Dos Equis 11-14 Federal Com 63H	**TVD Reference Elevation:**	3628.800 ft above MSL
Borehole:	Dos Equis 11-14 Federal Com 63H	**Seabed / Ground Elevation:**	3602.800 ft above MSL
UWI / API#:	Unknown / Unknown	**Magnetic Declination:**	6.670 °
Survey Name:	Cimarex Dos Equis 11-14 Federal Com 63H Rev0 RM 26Aug19	**Total Gravity Field Strength:**	998.4379mgn (9.80665 Based)
Survey Date:	August 26, 2019	**Gravity Model:**	GARM
Tort / AHD / DDI / ERD Ratio:	106.471 ° / 10143.984 ft / 6.288 / 0.822	**Total Magnetic Field Strength:**	47893.881 nT
Coordinate Reference System:	NAD83 New Mexico State Plane, Eastern Zone, US Feet	**Magnetic Dip Angle:**	59.899 °
Location Lat / Long:	N 32° 14' 18.15525", W 103° 38' 26.22650"	**Declination Date:**	August 26, 2019
Location Grid N/E Y/X:	N 451145.590 ftUS, E 755515.690 ftUS	**Magnetic Declination Model:**	HDGM 2019
CRS Grid Convergence Angle:	0.3695 °	**North Reference:**	Grid North
Grid Scale Factor:	0.99996163	**Grid Convergence Used:**	0.3695 °
Version / Patch:	2.10.760.0	**Total Corr Mag North->Grid North:**	6.3003 °
		Local Coord Referenced To:	Well Head

Comments	MD (ft)	Incl (°)	Azim Grid (°)	TVD (ft)	VSEC (ft)	NS (ft)	EW (ft)	DLS (°/100ft)	Northing (ftUS)	Easting (ftUS)	Latitude (N/S ° ' ")	Longitude (E/W ° ' ")
SHL [384' FNL, 1176' FEL]	0.00	0.00	180.69	0.00	0.00	0.00	0.00	N/A	451145.59	755515.69	N 32 14 18.16	W 103 38 26.23
KOP - Build 12°/100' DLS	11742.38	0.00	231.29	11742.38	0.00	0.00	0.00	0.00	451145.59	755515.69	N 32 14 18.16	W 103 38 26.23
Build & Turn 12°/100' DLS	12034.05	35.00	231.29	12016.24	53.60	-54.01	-67.37	12.00	451091.59	755448.32	N 32 14 17.63	W 103 38 27.01
Build 4°/100' DLS	12502.59	75.00	179.66	12291.21	390.81	-391.89	-180.06	12.00	450753.71	755335.64	N 32 14 14.29	W 103 38 28.35
Landing Point	12883.74	90.25	179.66	12340.00	767.69	-768.77	-177.80	4.00	450376.85	755337.90	N 32 14 10.56	W 103 38 28.35
Cimarex Dos Equis 11-14 Federal Com 63H - PBHL [100' FSL, 1356' FEL]	22197.55	90.25	179.66	12300.00	10081.42	-10082.33	-122.04	0.00	441063.67	755393.65	N 32 12 38.40	W 103 38 28.40

Survey Type: Non-Def Plan

Survey Error Model: ISCWSA Rev 0 *** 3-D 95.000% Confidence 2.7955 sigma

Survey Program:

Description	Part	MD From (ft)	MD To (ft)	EOU Freq (ft)	Hole Size (in)	Casing Diameter (in)	Expected Max Inclination (deg)	Survey Tool Type	Borehole / Survey
	1	0.000	26.000	1/100.000	30.000	30.000		NAL_MWD_IFR1+MS-Depth Only	Dos Equis 11-14 Federal Com 63H / Cimarex Dos Equis 11-14 Federal Com 63H Rev0 RM
	1	26.000	22197.550	1/100.000	30.000	30.000		NAL_MWD_IFR1+MS	Dos Equis 11-14 Federal Com 63H / Cimarex Dos Equis 11-14

Cimarex Energy

Rev 0

Borehole:	Well:	Field:	Structure:
Dos Equis 11-14 Federal Com 63H	Dos Equis 11-14 Federal Com 63H	NM Lea County (NAD 83)	Cimarex Dos Equis 11-14 Federal Com 63H

Gravity & Magnetic Parameters

Model:	HDGM 2019	Dip:	59.899°	Date:	26-Aug-2019
MagDec:	6.67°	FS:	47893.881nT	Gravity FS:	998.438mgn (9.80665 Based)

Surface Location NAD83 New Mexico State Plane, Eastern Zone, US Feet

Lat:	N 32 14 18.16	Northing:	451145.59ftUS	Grid Conv:	0.3695°
Lon:	W 103 38 26.23	Easting:	755515.69ftUS	Scale Fact:	0.99996163

Miscellaneous

Slot: New Slot TVD Ref: RKB(3628.8ft above MSL)

Plan: Cimarex Dos Equis 11-14 Federal Com 63H Rev0 RM 26Aug19

EW (ft) Scale = 1:2712.35(ft)

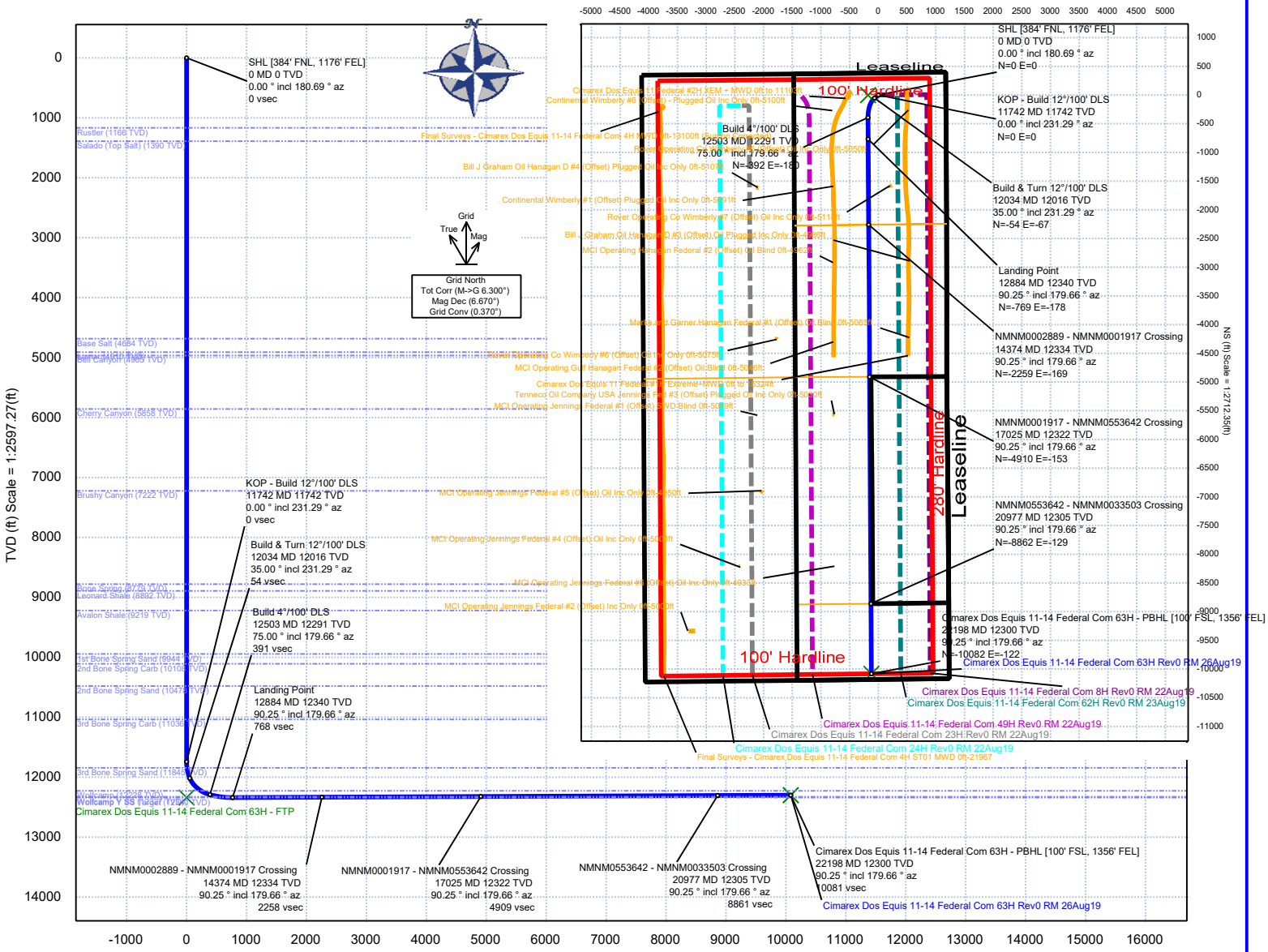

Vertical Section (ft) Azim = 179.66° Scale = 1:2597.27(ft) Origin = 0N/-S, 0E/-W

Critical Points

Critical Point	MD	INCL	AZIM	TVD	VSEC	N(+)/S(-)	E(+)/W(-)	DLS
SHL [384' FNL, 1176' FEL]	0.00	0.00	180.69	0.00	0.00	0.00	0.00	
Rustler	1166.00	0.00	231.29	1166.00	0.00	0.00	0.00	0.00
Salado (Top Salt)	1390.00	0.00	231.29	1390.00	0.00	0.00	0.00	0.00
Base Salt	4684.00	0.00	231.29	4684.00	0.00	0.00	0.00	0.00
Lamar	4910.00	0.00	231.29	4910.00	0.00	0.00	0.00	0.00
Bell Canyon	4965.00	0.00	231.29	4965.00	0.00	0.00	0.00	0.00
Cherry Canyon	5858.00	0.00	231.29	5858.00	0.00	0.00	0.00	0.00
Brushy Canyon	7222.00	0.00	231.29	7222.00	0.00	0.00	0.00	0.00
Bone Spring	8779.00	0.00	231.29	8779.00	0.00	0.00	0.00	0.00
Leonard Shale	8892.00	0.00	231.29	8892.00	0.00	0.00	0.00	0.00
Avalon Shale	9219.00	0.00	231.29	9219.00	0.00	0.00	0.00	0.00
1st Bone Spring Sand	9944.00	0.00	231.29	9944.00	0.00	0.00	0.00	0.00
2nd Bone Spring Carb	10108.00	0.00	231.29	10108.00	0.00	0.00	0.00	0.00
2nd Bone Spring Sand	10478.00	0.00	231.29	10478.00	0.00	0.00	0.00	0.00
3rd Bone Spring Carb	11036.00	0.00	231.29	11036.00	0.00	0.00	0.00	0.00
KOP - Build 12°/100' DLS	11742.38	0.00	231.29	11742.38	0.00	0.00	0.00	0.00
3rd Bone Spring Sand	11845.81	12.41	231.29	11845.00	6.93	-6.98	-8.71	12.00
Build & Turn 12°/100' DLS	12034.05	35.00	231.29	12016.24	53.60	-54.01	-67.37	12.00
Wolfcamp	12340.66	59.05	191.77	12228.00	243.30	-244.30	-166.23	12.00
Build 4°/100' DLS	12502.59	75.00	179.66	12291.21	390.81	-391.89	-180.06	12.00
Wolfcamp Y SS	12684.36	82.27	179.66	12327.00	568.90	-569.98	-178.99	4.00
Wolfcamp Y SS Target	12871.43	89.75	179.66	12340.00	755.38	-756.46	-177.87	4.00
Landing Point	12883.74	90.25	179.66	12340.00	767.69	-768.77	-177.80	4.00
Wolfcamp Y SS Target	12883.74	90.25	179.66	12340.00	767.69	-768.77	-177.80	0.00
NMNM0002889 - NMNM0001917 Crossing	14374.30	90.25	179.66	12333.60	2258.24	-2259.29	-168.88	0.00
Wolfcamp Y SS	15910.73	90.25	179.66	12327.00	3794.65	-3795.68	-159.68	0.00
NMNM0001917 - NMNM0553642 Crossing	17024.90	90.25	179.66	12322.21	4908.81	-4909.82	-153.01	0.00
NMNM0553642 - NMNM0033503 Crossing	20977.10	90.25	179.66	12305.24	8860.98	-8861.91	-129.35	0.00
Cimarex Dos Equis 11-14 Federal Com 63H - PBHL [100' FSL, 1356' FEL]	22197.55	90.25	179.66	12300.00	10081.42	-10082.33	-122.04	0.00
Wolfcamp A1	NaN			12355.00				
Wolfcamp A2	NaN			12991.00				

1. Geological Formations

TVD of target 12,300
MD at TD 22,198

Pilot Hole TD N/A
Deepest expected fresh water

Formation	Depth (TVD) from KB	Water/Mineral Bearing/Target Zone	Hazards
Rustler	1166	N/A	
Salado (Top Salt)	1390	N/A	
Base of Salt	4684	N/A	
Lamar	4910	N/A	
Bell Canyon	4965	N/A	
Cherry Canyon	5858	N/A	
Brushy Canyon	7222	Hydrocarbons	
Bone Spring	8779	Hydrocarbons	
Leonard Shale	8892	Hydrocarbons	
Avalon Shale	9219	Hydrocarbons	
1st Bone Spring Sand	9944	Hydrocarbons	
2nd Bone Spring Carb	10108	Hydrocarbons	
2nd Bone Spring Sand	10478	Hydrocarbons	
3rd Bone Spring Carb	11036	Hydrocarbons	
3rd Bone Spring Sand	11845	Hydrocarbons	
Wolfcamp	12228	Hydrocarbons	
Wolfcamp (Target)	12340	Hydrocarbons	

2. Casing Program

Hole Size	Casing Depth From	Casing Depth To	Setting Depth TVD	Casing Size	Weight (lb/ft)	Grade	Conn.	SF Collapse	SF Burst	SF Tension
14 3/4	0	1216	1216	10-3/4"	40.50	J-55	BT&C	2.84	5.63	12.77
9 7/8	0	12503	12291	7-5/8"	29.70	L-80	BT&C	2.50	1.20	1.82
6 3/4	0	11742	11742	5-1/2"	20.00	L-80	LT&C	1.16	1.20	1.88
6 3/4	11742	22198	12300	5"	18.00	P-110	BT&C	1.68	1.70	57.75
					BLM Minimum Safety Factor			1.125	1	1.6 Dry 1.8 Wet

TVD was used on all calculations.
All casing strings will be tested in accordance with Onshore Oil and Gas Order #2 III.B.1.h

Request Variance for 5-1/2" x 7-5/8" annular clearance. The portion that does not meet clearance will not be cemented

	Y or N
Is casing new? If used, attach certification as required in Onshore Order #1	Y
Does casing meet API specifications? If no, attach casing specification sheet.	Y
Is premium or uncommon casing planned? If yes attach casing specification sheet.	Y
Does the above casing design meet or exceed BLM's minimum standards? If not provide justification (loading assumptions, casing design criteria).	Y
Will the intermediate pipe be kept at a minimum 1/3 fluid filled to avoid approaching the collapse pressure rating of the casing?	Y
Is well located within Capitan Reef?	N
If yes, does production casing cement tie back a minimum of 50' above the Reef?	N
Is well within the designated 4 string boundary.	N
Is well located in SOPA but not in R-111-P?	N
If yes, are the first 2 strings cemented to surface and 3rd string cement tied back 500' into previous casing?	N
Is well located in R-111-P and SOPA?	N
If yes, are the first three strings cemented to surface?	N
Is 2nd string set 100' to 600' below the base of salt?	N
Is well located in high Cave/Karst?	N
If yes, are there two strings cemented to surface?	N
(For 2 string wells) If yes, is there a contingency casing if lost circulation occurs?	N
Is well located in critical Cave/Karst?	N
If yes, are there three strings cemented to surface?	N
Is AC Report included?	Y

3. Cementing Program

Casing	# Sks	Wt. lb/gal	Yld ft3/sack	H2O gal/sk	500# Comp. Strength (hours)	Slurry Description
Surface	472	13.50	1.72	9.15	15.5	Lead: Class C + Bentonite
	127	14.80	1.34	6.32	9.5	Tail: Class C + LCM
Intermediate Stage 1	584	10.30	3.64	22.18		Lead: Tuned Light + LCM
	198	14.80	1.36	6.57	9.5	Tail: Class C + Retarder
Intermediate Stage 2	785	12.90	1.88	9.65	12	Lead: 35:65 (Poz:C) + Salt + Bentonite
Production	840	14.20	1.30	5.86	14:30	Tail: 50:50 (Poz:H) + Salt + Bentonite + Fluid Loss + Dispersant + SMS

DV tool with possible annular casing packer as needed is proposed at a depth of +/- 4,910'.

Casing String	TOC	% Excess
Surface	0	45
Intermediate Stage 1	4910	47
Intermediate Stage 2	0	37
Production	11742	25

Cimarex request the ability to perform casing integrity tests after plug bump of cement job.

4. Pressure Control Equipment

	A variance is requested for the use of a diverter on the surface casing. See attached for schematic.

BOP installed and tested before drilling which hole?	Size	Min Required WP	Type		Tested To
9 7/8	**13 5/8**	**5M**	Annular	X	50% of working pressure
			Blind Ram		5M
			Pipe Ram	X	
			Double Ram	X	
			Other		
6 3/4	**13 5/8**	**10M**	Annular	X	50% of working pressure
			Blind Ram		10M
			Pipe Ram	X	
			Double Ram	X	
			Other		

BOP/BOPE will be tested by an independent service company to 250 psi low and the high pressure indicated above per Onshore Order 2 requirements. The System may be upgraded to a higher pressure but still tested to the working pressure listed in the table above. If the system is upgraded all the components installed will be functional and tested.

Pipe rams will be operationally checked each 24 hour period. Blind rams will be operationally checked on each trip out of the hole. These checks will be noted on the daily tour sheets. Other accessories to the BOP equipment will include a Kelly cock and floor safety valve (inside BOP) and choke lines and choke manifold. See attached schematics.

X		Formation integrity test will be performed per Onshore Order #2. On Exploratory wells or on that portion of any well approved for a 5M BOPE system or greater, a pressure integrity test of each casing shoe shall be performed. Will be tested in accordance with Onshore Oil and Gas Order #2 III.B.1.i.
X		A variance is requested for the use of a flexible choke line from the BOP to Choke Manifold. See attached for specs and hydrostatic test chart.
	N	Are anchors required by manufacturer?

5. Mud Program

Depth	Type	Weight (ppg)	Viscosity	Water Loss
0' to 1216'	FW Spud Mud	8.30 - 8.80	30-32	N/C
1216' to 12503'	Brine Diesel Emulsion	8.50 - 9.00	30-35	N/C
12503' to 22198'	Oil Based Mud	12.00 - 12.50	50-70	N/C

Sufficient mud materials to maintain mud properties and meet minimum lost circulation and weight increase requirements will be kept on location at all times.

The Brine Emulsion is completely saturated brine fluid that ties diesel into itself to lower the weight of the fluid. The drilling fluid is completely salt saturated.

What will be used to monitor the loss or gain of fluid?	PVT/Pason/Visual Monitoring

6. Logging and Testing Procedures

Logging, Coring and Testing	
	Will run GR/CNL fromTD to surface (horizontal well – vertical portion of hole). Stated logs run will be in the Completion Report and submitted to the BLM.
	No logs are planned based on well control or offset log information.
	Drill stem test?
	Coring?

Additional Logs Planned	Interval

7. Drilling Conditions

Condition	
BH Pressure at deepest TVD	7995 psi
Abnormal Temperature	No

Hydrogen Sulfide (H2S) monitors will be installed prior to drilling out the surface shoe. If H2S is detected in concentrations greater than 100 ppm, the operator will comply with the provisions of Onshore Oil and Gas Order #6. If Hydrogen Sulfide is encountered, measured values and formations will be provided to the BLM.	
X	H2S is present
X	H2S plan is attached

8. Other Facets of Operation

9. Wellhead

A multi-bowl wellhead system will be utilized.

After running the 10-3/4" surface casing, a 13 5/8" BOP/BOPE system with a minimum working pressure of 10000 psi will be installed on the wellhead system and will be pressure tested to 250 psi low followed by a 10000 psi test. Annular will be tested to 50% of working pressure. The pressure test will be repeated at least every 30 days, as per Onshore Order No. 2.

The multi-bowl wellhead will be installed by vendor's representative. A copy of the installation instructions has been sent to the BLM field office.

The wellhead will be installed by a third-party welder while being monitored by the wellhead vendor representative.

All BOP equipment will be tested utilizing a conventional test plug. Not a cup or J-packer type.

A solid steel body pack-off will be utilized after running and cementing the intermediate casing. After installation the pack-off and lower flange will be pressure tested to 10000 psi.

All casing strings will be tested as per Onshore Order No.2 to atleast 0.22 psi/ft or 1,500 whichever is greater and not to exceed 70% of casing burst.

If well conditions dictate conventional slips will be set and BOPE will be tested to appropriate pressures based on permitted pressure requirements.

Cimarex 10M Well Control Plan

Version 1.0

BOPE Preventer Utilization

The table below displays all BHA components, drill pipe, casing, or open hole that could be present during a required shut in and the associated preventer component that would provide a barrier to flow. It is specific to the hole section that requires a 10M system. The mud system being utilized in the hole will always assumed to be the first barrier to flow. The below table, combined with the mud program, documents that two barriers to flow can be maintained at all times, independent of the rating of the annular preventer.

Drill String Element	OD	Preventer	RWP
4” Drillpipe	4”	Lower Ram 3 1/2” - 5 ½” VBR* Upper Ram 3 1/2” - 5 ½” VBR*	10M
4.5” Drillpipe	4.5”	Lower Ram 3 1/2” - 5 ½” VBR* Upper Ram 3 1/2” - 5 ½” VBR*	10M
4” HWDP Drillpipe	4”	Lower Ram 3 1/2” - 5 ½” VBR* Upper Ram 3 1/2” - 5 ½” VBR*	10M
4.5” HWDP Drillpipe	4.5”	Lower Ram 3 1/2” - 5 ½” VBR* Upper Ram 3 1/2” - 5 ½” VBR*	10M
Drill Collars (including non-magnetic)	4.75-5.25”	Lower Ram 3 1/2” - 5 ½” VBR* Upper Ram 3 1/2” - 5 ½” VBR*	10M
Production Casing	5.5”	Lower Ram 3 1/2” - 5 ½” VBR* Upper Ram 3 1/2” - 5 ½” VBR*	10M
Production Casing	5”	Lower Ram 3 1/2” - 5 ½” VBR* Upper Ram 3 1/2” - 5 ½” VBR*	10M
Production Casing	4.5”	Lower Ram 3 1/2” - 5 ½” VBR* Upper Ram 3 1/2” - 5 ½” VBR*	10M
ALL	0-13 5/8”	Annular	5M
0pen Hole		Blind Rams	10M

*VBR – Variable Bore Ram

Well Control Procedures

Proper well control response is highly specific to current well conditions and must be adapted based on environment as needed. The procedures below are given in “common” operating conditions to cover the basic and most necessary operations required during the wellbore construction. These include drilling ahead, tripping pipe, tripping BHA, running casing, and pipe out of the hole/open hole. In some of the procedures below, there will be a switch of control from the lesser RWP annular to the appropriate 10M RWP ram. The pressure at which this is done is variable based on overall well conditions that must be evaluated situationally. The pressure that control is switched may be equal to or less than the RWP but at no time will the pressure on the annular preventer exceed the RWP of the annular. The annular will be tested to 5,000 psi. This will be the RWP of the annular preventer.

Shutting In While Drilling

1. Sound alarm to alert crew
2. Space out drill string
3. Shut down pumps
4. Shut in uppermost BOPE preventer (typically the annular preventer) and open HCR.
5. Verify well is shut-in and flow has stopped
6. Notify supervisory personnel
7. Record data (SIDP, SICP, Pit Gain, and Time)
8. Hold pre-job safety meeting and discuss kill procedure

9. If pressure is anticipated to climb to the RWP of the annular preventer during kill procedure, swap control of the well to the upper pipe ram

Shutting In While Tripping

1. Sound alarm and alert crew
2. Install open, full open safety valve and close valve
3. Shut in uppermost BOPE preventer (typically the annular preventer) and open HCR.
4. Verify well is shut-in and flow has stopped
5. Notify supervisory personnel
6. Record data (SIDP, SICP, Pit Gain, and Time)
7. Hold pre-job safety meeting and discuss kill procedure
8. If pressure is anticipated to climb to the RWP of the annular preventer during kill procedure, swap control of the well to the upper pipe ram

Shutting In While Running Casing

1. Sound alarm and alert crew
2. Install circulating swedge. Close high pressure, low torque valves.
3. Shut in uppermost BOPE preventer (typically the annular preventer) and open HCR.
4. Verify well is shut-in and flow has stopped
5. Notify supervisory personnel
6. Record data (SIDP, SICP, Pit Gain, and Time)
7. Hold Pre-job safety meeting and discuss kill procedure
8. If pressure is anticipated to climb to the RWP of the annular preventer during kill procedure, swap control of the well to the upper pipe ram

Shutting in while out of hole

1. Sound alarm
2. Shut-in well: close blind rams
3. Verify well is shut-in and monitor pressures
4. Notify supervisory personnel
5. Record data (SIDP, SICP, Pit Gain, and Time)
6. Hold Pre-job safety meeting and discuss kill procedure

Shutting in prior to pulling BHA through stack

1. Prior to pulling last joint of drill pipe thru the stack space out and check flow. If flowing see steps below.
2. Sound alarm and alert crew
3. Install open, full open safety valve and close valve
4. Shut in upper pipe ram and open HCR.

5. Verify well is shut-in and flow has stopped

6. Notify supervisory personnel

7. Record data (SIDP, SICP, Pit Gain, and Time)

8. Hold pre-job safety meeting and discuss kill procedure

Shutting in while BHA is in the stack and ram preventer and combo immediately available

1. Sound alarm and alert crew

2. Stab Crossover and install open, full open safety valve and close valve

3. Space out drill string with upset just beneath the compatible pipe ram.

4. Shut in upper compatible pipe ram and open HCR.

5. Verify well is shut-in and flow has stopped

6. Notify supervisory personnel

7. Record data (SIDP, SICP, Pit Gain, and Time)

8. Hold pre-job safety meeting and discuss kill procedure

Shutting in while BHA is in the stack and no ram preventer or combo immediately available

1. Sound alarm and alert crew

2. If possible pick up high enough, to pull string clear and follow “Open Hole” scenario

3. If not possible to pick up high enough:

    1. Stab Crossover, make up one joint/stand of drill pipe, and install open, full open safety valve and close valve

4. Space out drill string with upset just beneath the compatible pipe ram.

5. Shut in upper compatible pipe ram and open HCR.

6. Verify well is shut-in and flow has stopped

7. Notify supervisory personnel

8. Record data (SIDP, SICP, Pit Gain, and Time)

9. Hold pre-job safety meeting and discuss kill procedure

Dos Equis 11-14 Fed Com 63H

CACTUS FOR SERVICE
WEARBUSHING
IN CASING HEAD &
CASING SPOOL

LEA CO., NM

Multi-bowl Wellhead Diagram

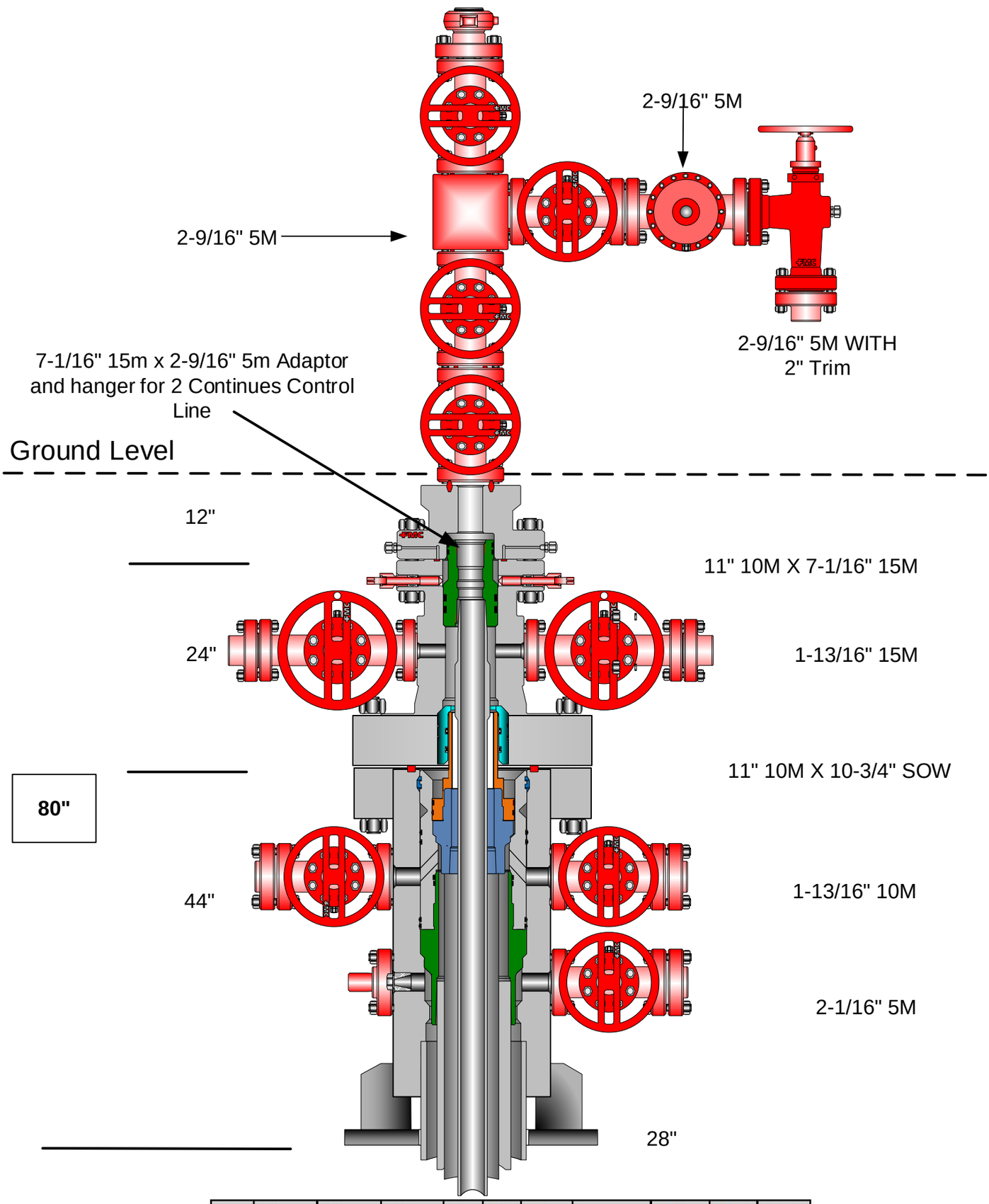

Hole Size	Casing Depth From	Casing Depth To	Setting Depth TVD	Casing Size	Weight (lb/ft)	Grade	Conn.	SF Collapse	SF Burst	SF Tension
14 3/4	0	1216	1216	10-3/4"	40.50	J-55	BT&C	2.84	5.63	12.77
9 7/8	0	12503	12291	7-5/8"	29.70	L-80	BT&C	2.50	1.20	1.82
6 3/4	0	11742	11742	5-1/2"	20.00	L-80	LT&C	1.16	1.20	1.88
6 3/4	11742	22198	12300	5"	18.00	P-110	BT&C	1.68	1.70	57.75
						BLM Minimum Safety Factor		1.125	1	1.6 Dry 1.8 Wet

PWD Data Report

04/09/2020

APD ID: 10400047745 **Submission Date:** 09/30/2019

Operator Name: CIMAREX ENERGY COMPANY

Well Name: DOS EQUIS 11-14 FEDERAL COM **Well Number:** 63H

Well Type: OIL WELL **Well Work Type:** Drill

Section 1 - General

Would you like to address long-term produced water disposal? NO

Section 2 - Lined Pits

Would you like to utilize Lined Pit PWD options? N

Produced Water Disposal (PWD) Location:

PWD surface owner: **PWD disturbance (acres):**

Lined pit PWD on or off channel:

Lined pit PWD discharge volume (bbl/day):

Lined pit specifications:

Pit liner description:

Pit liner manufacturers information:

Precipitated solids disposal:

Decribe precipitated solids disposal:

Precipitated solids disposal permit:

Lined pit precipitated solids disposal schedule:

Lined pit precipitated solids disposal schedule attachment:

Lined pit reclamation description:

Lined pit reclamation attachment:

Leak detection system description:

Leak detection system attachment:

Operator Name: CIMAREX ENERGY COMPANY

Well Name: DOS EQUIS 11-14 FEDERAL COM **Well Number:** 63H

Lined pit Monitor description:

Lined pit Monitor attachment:

Lined pit: do you have a reclamation bond for the pit?

Is the reclamation bond a rider under the BLM bond?

Lined pit bond number:

Lined pit bond amount:

Additional bond information attachment:

Section 3 - Unlined Pits

Would you like to utilize Unlined Pit PWD options? N

Produced Water Disposal (PWD) Location:

PWD disturbance (acres): **PWD surface owner:**

Unlined pit PWD on or off channel:

Unlined pit PWD discharge volume (bbl/day):

Unlined pit specifications:

Precipitated solids disposal:

Decribe precipitated solids disposal:

Precipitated solids disposal permit:

Unlined pit precipitated solids disposal schedule:

Unlined pit precipitated solids disposal schedule attachment:

Unlined pit reclamation description:

Unlined pit reclamation attachment:

Unlined pit Monitor description:

Unlined pit Monitor attachment:

Do you propose to put the produced water to beneficial use?

Beneficial use user confirmation:

Estimated depth of the shallowest aquifer (feet):

Does the produced water have an annual average Total Dissolved Solids (TDS) concentration equal to or less than that of the existing water to be protected?

TDS lab results:

Geologic and hydrologic evidence:

State authorization:

Unlined Produced Water Pit Estimated percolation:

Unlined pit: do you have a reclamation bond for the pit?

Operator Name: CIMAREX ENERGY COMPANY

Well Name: DOS EQUIS 11-14 FEDERAL COM **Well Number:** 63H

Is the reclamation bond a rider under the BLM bond?

Unlined pit bond number:

Unlined pit bond amount:

Additional bond information attachment:

Section 4 - Injection

Would you like to utilize Injection PWD options? N

Produced Water Disposal (PWD) Location:

PWD surface owner: **PWD disturbance (acres):**

Injection PWD discharge volume (bbl/day):

Injection well mineral owner:

Injection well type:

Injection well number: **Injection well name:**

Assigned injection well API number? **Injection well API number:**

Injection well new surface disturbance (acres):

Minerals protection information:

Mineral protection attachment:

Underground Injection Control (UIC) Permit?

UIC Permit attachment:

Section 5 - Surface Discharge

Would you like to utilize Surface Discharge PWD options? N

Produced Water Disposal (PWD) Location:

PWD surface owner: **PWD disturbance (acres):**

Surface discharge PWD discharge volume (bbl/day):

Surface Discharge NPDES Permit?

Surface Discharge NPDES Permit attachment:

Surface Discharge site facilities information:

Surface discharge site facilities map:

Section 6 - Other

Would you like to utilize Other PWD options? N

Produced Water Disposal (PWD) Location:

PWD surface owner: **PWD disturbance (acres):**

Other PWD discharge volume (bbl/day):

Operator Name: CIMAREX ENERGY COMPANY

Well Name: DOS EQUIS 11-14 FEDERAL COM **Well Number:** 63H

Other PWD type description:

Other PWD type attachment:

Have other regulatory requirements been met?

Other regulatory requirements attachment:

Bond Info Data Report

04/09/2020

APD ID: 10400047745

Submission Date: 09/30/2019

Highlighted data reflects the most recent changes

Operator Name: CIMAREX ENERGY COMPANY

Well Name: DOS EQUIS 11-14 FEDERAL COM

Well Number: 63H

Show Final Text

Well Type: OIL WELL

Well Work Type: Drill

Bond Information

Federal/Indian APD: FED

BLM Bond number: NMB001188

BIA Bond number:

Do you have a reclamation bond? NO

Is the reclamation bond a rider under the BLM bond?

Is the reclamation bond BLM or Forest Service?

BLM reclamation bond number:

Forest Service reclamation bond number:

Forest Service reclamation bond attachment:

Reclamation bond number:

Reclamation bond amount:

Reclamation bond rider amount:

Additional reclamation bond information attachment: