Form 3160-5
(June 2015)

UNITED STATES
DEPARTMENT OF THE INTERIOR
BUREAU OF LAND MANAGEMENT

FORM APPROVED
OMB NO. 1004-0137
Expires: January 31, 2018

SUNDRY NOTICES AND REPORTS ON WELLS

Do not use this form for proposals to drill or to re-enter an abandoned well. Use form 3160-3 (APD) for such proposals.

SUBMIT IN TRIPLICATE - Other instructions on page 2

5. Lease Serial No.
NMNM127446

6. If Indian, Allottee or Tribe Name

7. If Unit or CA/Agreement, Name and/or No.

1. Type of Well
☒ Oil Well ☐ Gas Well ☐ Other

8. Well Name and No.
DONKEY KONG 1 FED COM 503H

2. Name of Operator
CENTENNIAL RESOURCE PRODUCTION
Contact: KANICIA SCHLICHTING
E-Mail: kanicia.schlichting@cdevinc.com

9. API Well No.
30-025-45680-00-X1

3a. Address
1001 17TH STREET SUITE 1800
DENVER, CO 80202

3b. Phone No. (include area code)
Ph: 720.499.1537

10. Field and Pool or Exploratory Area
OJO CHISO

4. Location of Well *(Footage, Sec., T., R., M., or Survey Description)*
Sec 1 T23S R34E NWSE 2090FSL 1416FEL
32.332127 N Lat, 103.419800 W Lon

OCD – HOBBS
04/09/2020
RECEIVED

11. County or Parish, State
LEA COUNTY, NM

12. CHECK THE APPROPRIATE BOX(ES) TO INDICATE NATURE OF NOTICE, REPORT, OR OTHER DATA

TYPE OF SUBMISSION	TYPE OF ACTION			
☒ Notice of Intent	☐ Acidize	☐ Deepen	☐ Production (Start/Resume)	☐ Water Shut-Off
☐ Subsequent Report	☐ Alter Casing	☐ Hydraulic Fracturing	☐ Reclamation	☐ Well Integrity
☐ Final Abandonment Notice	☐ Casing Repair	☐ New Construction	☐ Recomplete	☒ Other Change to Original A PD
	☐ Change Plans	☐ Plug and Abandon	☐ Temporarily Abandon	
	☐ Convert to Injection	☐ Plug Back	☐ Water Disposal	

13. Describe Proposed or Completed Operation: Clearly state all pertinent details, including estimated starting date of any proposed work and approximate duration thereof. If the proposal is to deepen directionally or recomplete horizontally, give subsurface locations and measured and true vertical depths of all pertinent markers and zones. Attach the Bond under which the work will be performed or provide the Bond No. on file with BLM/BIA. Required subsequent reports must be filed within 30 days following completion of the involved operations. If the operation results in a multiple completion or recompletion in a new interval, a Form 3160-4 must be filed once testing has been completed. Final Abandonment Notices must be filed only after all requirements, including reclamation, have been completed and the operator has determined that the site is ready for final inspection.

Centennial Resource Production, LLC requests to update the APD drilling attachments. We will be drilling this well on Patterson Rig 588 so we have updated the attachments to reflect the new rig.

Below are the new attachments:
? H2S Plans with updated Contacts
? Patterson 588 ? BOP Schematic
? Patterson 588 Choke Manifold
? Multi-bowl Procedures
? Patterson CoFLex Choke line specification and variance request

14. I hereby certify that the foregoing is true and correct.

Electronic Submission #508862 verified by the BLM Well Information System
For CENTENNIAL RESOURCE PRODUCTION, sent to the Hobbs
Committed to AFMSS for processing by PRISCILLA PEREZ on 03/30/2020 (20PP1838SE)

Name *(Printed/Typed)* KANICIA SCHLICHTING — Title SR REGULATORY ANALYST

Signature (Electronic Submission) — Date 03/30/2020

THIS SPACE FOR FEDERAL OR STATE OFFICE USE

Approved By JEROMY PORTER — Title PETROLEUM ENGINEER — Date 04/06/2020

Conditions of approval, if any, are attached. Approval of this notice does not warrant or certify that the applicant holds legal or equitable title to those rights in the subject lease which would entitle the applicant to conduct operations thereon.

Office Hobbs

Title 18 U.S.C. Section 1001 and Title 43 U.S.C. Section 1212, make it a crime for any person knowingly and willfully to make to any department or agency of the United States any false, fictitious or fraudulent statements or representations as to any matter within its jurisdiction.

(Instructions on page 2)

**** BLM REVISED ** BLM REVISED ** BLM REVISED ** BLM REVISED ** BLM REVISED ****

Kz

Revisions to Operator-Submitted EC Data for Sundry Notice #508862

	Operator Submitted	BLM Revised (AFMSS)
Sundry Type:	APDCH NOI	APDCH NOI
Lease:	NMNM127446	NMNM127446
Agreement:		
Operator:	CENTENNIAL RESOURCE PRODUCTION 1001 17 STREET SUITE 1800 DENVER, CO 80202 Ph: 720-499-1537	CENTENNIAL RESOURCE PRODUCTION 1001 17TH STREET SUITE 1800 DENVER, CO 80202 Ph: 720.441.5515
Admin Contact:	KANICIA SCHLICHTING SR REGULATORY ANALYST E-Mail: kanicia.schlichting@cdevinc.com Ph: 720.499.1537	KANICIA SCHLICHTING SR REGULATORY ANALYST E-Mail: kanicia.schlichting@cdevinc.com Ph: 720.499.1537
Tech Contact:	KANICIA SCHLICHTING SR REGULATORY ANALYST E-Mail: kanicia.schlichting@cdevinc.com Ph: 720.499.1537	KANICIA SCHLICHTING SR REGULATORY ANALYST E-Mail: kanicia.schlichting@cdevinc.com Ph: 720.499.1537
Location:		
State:	NM	NM
County:	LEA	LEA
Field/Pool:	OJO CHISO;BONE SPRING, S	OJO CHISO
Well/Facility:	DONKEY KONG 1 FEDERAL COM 503H Sec 1 T23S R34E Mer NMP 2090FSL 1416FEL 32.332125 N Lat, 103.419801 W Lon	DONKEY KONG 1 FED COM 503H Sec 1 T23S R34E NWSE 2090FSL 1416FEL 32.332127 N Lat, 103.419800 W Lon

Donkey Kong 1 Fed Com 501H

Centennial Drilling Plan for 3-Casing String Bone Springs Formation

13-3/8" x 9-5/8" x 5-1/2" Casing Design

1. Drill 17-1/2" surface hole to Total Depth with Spudder Rig and perform wellbore cleanup cycles.
2. Run and land 13-3/8" casing to Depth.
3. Cement 13-3/8" casing – cement to surface.
4. Cut / Dress Conductor and 13-3/8" casing as needed, weld on Cameron Multi-bowl system with baseplate supported by 20" conductor.
5. Test Weld to 70% of 13-3/8" casing collapse. Place nightcap with Pressure Gauge on wellhead and test seals to 70% of Casing Collapse.
6. Bleed Pressure if necessary and remove nightcap. Nipple up and test BOPE with test plug per Onshore Order 2.
7. Test casing per COA WOC timing (.22 psi/ft or 1500 psi whichever is greater) - not to exceed 70% casing burst. Cement must have achieved 500psi compressive strength prior to test.
8. Install wear bushing then drill out 13-3/8" shoe-track plus 20' and conduct FIT to minimum of the MW equivalent anticipated to control the formation pressure to the next casing point.
9. Drill 12-1/4" Intermediate hole to 9-5/8" casing point. (Base Capitan Reef).
10. Remove wear bushing then run and land 9-5/8" Intermediate Casing with mandrel hanger in wellhead.
11. Cement 9-5/8 casing – cement to surface.
12. Washout stack then run wash tool in wellhead and wash hanger and pack-off setting area.
13. Install pack-off and test to 5000 psi for 15 minutes.
    a. Test casing per COA WOC timing (.22 psi/ft or 1500 psi whichever is greater) - not to exceed 70% casing burst. Cement must have achieved 500psi compressive strength prior to test.
14. Install wear bushing then drill out 9-5/8" shoe-track plus 20' and conduct FIT to minimum MW equivalent to control the formation pressure to TD of well.
15. Drill 8-3/4" Vertical hole to KOP – Trip out for Curve BHA.
16. Drill 8-3/4" Curve, landing in production interval – Trip for Lateral BHA.
17. Drill 8-1/2" Lateral to Permitted BHL, perform cleanup cycles and trip out to run 5-1/2" Production Casing.
18. Remove wear bushing then run 5-1/2" production casing to TD landing casing mandrel in wellhead.
19. Cement 5-1/2" Production string to surface.
20. Run in with wash tool and wash wellhead area – install pack-off and test to 5000psi for 15 minutes.
21. Install BPV in 5-1/2" mandrel hanger – Nipple down BOPE and install nightcap.
22. Test nightcap void to 5000psi for 30 minutes.

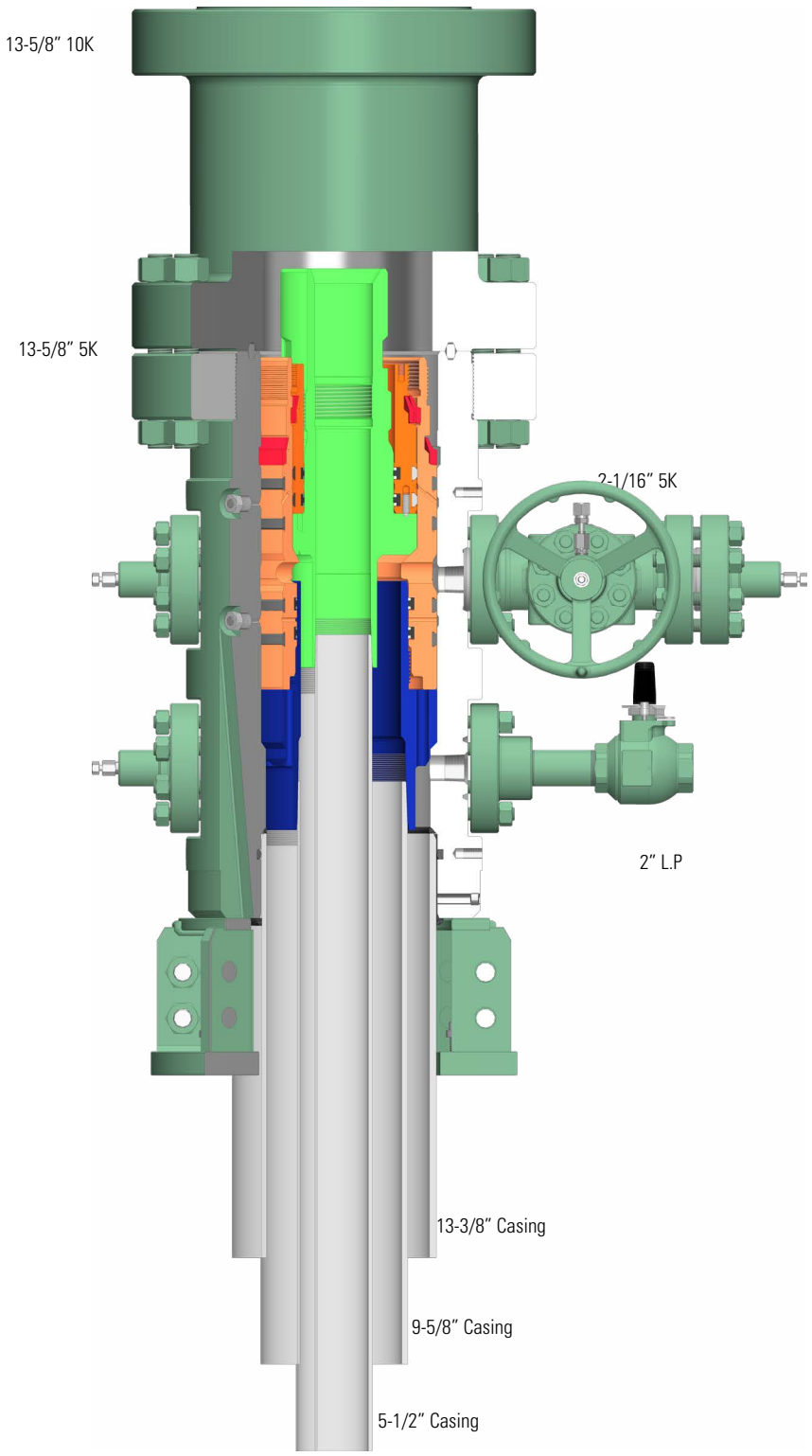

CENTENNIAL
RESOURCE DEVELOPMENT, INC

CAMERON CONFIDENTIAL INFORMATION			
DO NOT SCALE		CAMERON A Schlumberger Company	Surface Systems
Drawn by: C.Moore	Date: 7/1/19	13-5/8" 10k MN-DS	Rev: 02
Checked by: V.Atwell	Date: 7/1/19		
Drawing No: 1655807-A			

HYDROGEN SULFIDE CONTINGENCY PLAN

Donkey Kong 1 Fed Com 501H

Section 23

T 23S R 34E 2090’ FSL & 1356’ FEL

Lea County, NM

Initial Date: 10/9/18

Revision Date:

Table of Contents

INTRODUCTION

This plan specifies precautionary measures, safety equipment, emergency procedures, responsibilities, duties, and the compliance status pertaining to the production operations of Hydrogen Sulfide producing wells on:

Centennial Resource Development, Inc.

This plan will be in full effect prior to and continuing with all drilling operations for all wells producing potential Hydrogen Sulfide on the

Donkey Kong 1 Fed Com 501H

This plan was developed in response to the potential hazards involved when producing formations that may contain Hydrogen Sulfide (H_2S) It has been written in compliance with current New Mexico Oil Conservation Division Rule 118 and Bureau of Land Management 43 CFR 3160 Onshore Order No. 6.

All personnel shall receive proper H2S training in accordance with Onshore Order III.C.3.a

This plan shall require the full cooperation and efforts of all individuals participating in the production of potential H_2S wells.

Each individual is required to know their assigned responsibilities and duties in regard to normal production operations and emergency procedures.

Each person should thoroughly understand and be able to use all safety related equipment on the production facility.

Each person should become familiar with the location of all safety equipment and become involved in ensuring that all equipment is properly stored, easily accessible, and routinely maintained.

An ongoing training program will remain in effect with regular training, equipment inspections, and annual certifications for all personnel.

Centennial Resource Development, Inc. shall make every reasonable effort to provide all possible safeguards to protect all personnel, both on this location and in the immediate vicinity, from the harmful effects of H_2S exposure, if a release to the atmosphere should occur.

DIRECTIONS TO LOCATION

Donkey Kong 1 Fed Com 501H

Section 23

T 23S R 34E 2090’ FSL & 1356’ FEL

Lea County, NM

COMMENCING AT THE INTERSECTION OF N.M. 207 AND N.M. 176 IN EUNICE, NEW MEXICO, PROCEED IN A SOUTHERLY DIRECTION ALONG NM-207 APPROXIMATELY 2.5 MILES TO THE JUNCTION OF THIS ROAD AND DELAWARE BASIN ROAD TO THE WEST; TURN RIGHT AND PROCEED IN A WESTERLY, THEN SOUTHWESTERLY, THEN WESTERLY DIRECTION APPROXIMATELY 20.3 MILES TO THE JUNCTION OF THIS ROAD AND AN EXISTING ROAD TO THE NORTH; TURN RIGHT AND PROCEED IN A NORTHERLY DIRECTION APPROXIMATELY 0.3 MILES TO THE BEGINNING OF THE PROPOSED ACCESS FOR THE DUCK HUNT 1 STATE COM #601 & #602 TO THE EAST; FOLLOW ROAD FLAGS IN AN EASTERLY, THEN NORTHERLY, DIRECTION APPROXIMATELY 6,204' TO THE BEGINNING OF THE ROAD FLAGS TO THE NORTHWEST; FOLLOW ROAD FLAGS IN A NORTHWESTERLY DIRECTION APPROXIMATELY 29' TO THE PROPOSED LOCATION.
TOTAL DISTANCE FROM EUNICE, NEW MEXICO TO THE PROPOSED WELL LOCATION IS APPROXIMATELY 24.3 MILES.

SAFE BRIEFING AREAS

Two areas will be designated as “SAFE BRIEFING AREAS”.

The Primary Safe Briefing Area

If the Primary Safe Briefing Area cannot be used due to wind conditions; the designated secondary safe briefing area will be used.

These two areas are so designated for accessibility reasons related to self-contained safe breathing air device locations, evacuation muster point utility, and for ease of overall communication, organizational support, as well as the all-important prevailing wind directions. Drawings of the facility denoting these locations are included on Page 15.

If H_2S is detected in concentrations equal to or in excess of 15 PPM, all personnel not assigned emergency duties are to assemble in the appropriate “SAFE BRIEFING AREA” for instructions.

Wind Direction Indicators: A windsock, shall be positioned, allowing the wind direction to be observed from anywhere on the charted facility location.

Warning-DANGER SIGNS for Approaching Traffic: All signs shall also be illuminated under conditions of poor visibility.

DANGER
POISONOUS GAS
HYDROGEN SULFIDE
DO NOT APPROACH IF AMBER LIGHTS ARE FLASHING

An amber strobe light system will be activated for H_2S concentrations of 10 PPM or greater and an audible alarm will sound when H_2S exceeds 15 ppm, and. This condition will exist until the all clear is given.

DRILL SITE LOCATION:

1. The drilling rig should be situated on location such that the prevailing winds blow across the rig toward the reserve pit or at right angles to a line from the rig to the reserve pit.
2. The entrance to the location should be designated so that it can be barricaded if Hydrogen Sulfide emergency conditions arise. An auxiliary exit (or entrance) should be available in case of a catastrophe; a shift in wind direction would not preclude escape from the location. Appropriate warning signs and flags should be placed at all location entrances.
3. Once H2S safety procedures are established on location, no beards or facial hair, which will interfere with face seal or mask, will be allowed on location.
4. A minimum of two BRIEFING AREAS will be established, no less than 250 feet from the wellhead and in such location that at least one area will be up-wind from the well at all times. Upon recognition of an emergency situation, all personnel should assemble at the designated briefing areas for instructions.
5. A safety equipment trailer will be station at one of the briefing areas.
6. Windsocks will be installed and wind streamers (6 to 8 feet above ground level) placed at the location entrance. Windsocks shall be illuminated for nighttime operations. Personnel should develop wind direction consciousness.
7. The mud-logging trailer will be located so as to minimize the danger from the gas that breaks out of the drilling fluid.
8. Shale shaker mud tanks will be located so as to minimize the danger from gas that breaks out of the drilling fluid.
9. Electric power plant(s) will be located as far from the well bore as practical so that it may be used under conditions where it otherwise would have to be shut down.
10. When approaching depth where Hydrogen Sulfide may be encountered, appropriate warning signs will be posted on all access roads to the location and at the foot of all stairways to the derrick floor.
11. Appropriate smoking areas will be designated, and smoking will be prohibited elsewhere.

The table below lists various poisonous gases and the concentrations at which they become dangerous.

TOXICITY OF VARIOUS GASES

TOXICITY OF GASES (Taken from API RP-49 September 1974 – Re-issued August 1978)					
Common Name	**Chemical Formula**	**Gravity (Air = 1)**	**Threshold 1 Limit**	**Hazardous 2 Limit**	**Lethal 3 Limit**
Hydrogen Sulfide	H_2S	1.18	10 ppm	250 ppm/1hr	600 ppm
Sulfur Dioxide	SO_2	2.21	20 ppm	---	1000 ppm
Carbon Monoxide	CO	0.97	50 ppm	400 ppm/1hr	1000 ppm
Carbon Dioxide	CO_2	1.52	5000 ppm	5%	10%
Methane	CH_4	0.55	90000 ppm	Combustible Above 5% in Air	

1. Threshold concentration at which it is believed that all workers may repeatedly be exposed day after day, without adverse effect	2. Hazardous concentration that may cause death	3. Lethal concentration that will cause death with short-term exposure

Properties of Gases

The produced gas will probably be a mixture of Carbon Dioxide, Hydrogen Sulfide, and Methane.

Carbon Dioxide
Carbon Dioxide (CO_2) is usually considered inert and is commonly used to extinguish fires.

It is heavier than air (1.52 times) and it will concentrate in low areas of still air.

Humans cannot breathe air containing more than 10% CO_2 without losing consciousness. Air containing 5% CO_2 will cause disorientation in a few minutes.

Continued exposures to CO_2 after being affected will cause convulsions, coma, and respiratory failure.

The threshold limit of CO_2 is 5000 ppm.

Short-term exposure to 50,000 PPM (5%) is reasonable. This gas is colorless and odorless and can be tolerated in relatively high concentrations.

Hydrogen Sulfide

Hydrogen Sulfide (H_2S) itself is a colorless, transparent gas and is flammable. It is heavier than air and, hence, may accumulate in low places.

Although the slightest presence of H_2S in the air is normally detectable by its characteristic "rotten egg" odor, it is dangerous to rely on the odor as a means of detecting excessive concentrations because the sense of smell is rapidly lost, allowing lethal concentrations to be accumulated without warning. The following table indicates the poisonous nature of Hydrogen Sulfide.

HYDROGEN SULFIDE TOXICITY			
Concentration			Effects
%H_2S	PPM	GR/100 SCF 1	
0.001	10	0.65	Safe for 8 hours without respirator. Obvious and unpleasant odor.
0.002	20	1.30	Burning in eyes and irritation of respiratory tract after on hour.
0.01	100	6.48	Kills smell in 3 to 15 minutes; may sting eyes and throat.
0.02	200	12.96	Kills smell shortly; stings eyes and throat.
0.05	500	32.96	Dizziness; breathing ceases in a few minutes; need prompt artificial respiration.
0.07	700	45.92	Unconscious quickly; death will result if not rescued promptly
0.10	1000	64.80	DEATH!
Note: 1 grain per 100 cubic feet			

Sulfur Dioxide

Sulfur Dioxide is a colorless, transparent gas and is non-flammable.

Sulfur Dioxide (SO_2) is produced during the burning of H_2S. Although SO_2 is heavier than air, it will be picked up by a breeze and carried downwind at elevated temperatures. Since Sulfur Dioxide is extremely irritating to the eyes and mucous membranes of the upper respiratory tract, it has exceptionally good warning powers in this respect. The following table indicates the toxic nature of the gas.

SULFUR DIOXIDE TOXICITY		
Concentration		Effects
$\%SO_2$	PPM	
0.0005	3 to 5	Pungent odor-normally a person can detect SO_2 in this range.
0.0012	12	Throat irritation, coughing, and constriction of the chest tearing and smarting of eyes.
0.15	150	So irritating that it can only be endured for a few minutes.
0.05	500	Causes a sense of suffocation, even with first breath.

H_2S REQUIRED EQUIPMENT LIST

RESPIRATORY SAFETY SYSTEMS

- Working cascade system available on rig floor and pit system & 750’ of air line hose
- Four (4) breathing air manifolds
- Four (4) 30-minute rescue packs
- Five (5) work/Escape units
- Five (5) escape units
- One (1) filler hose for the work/escape/resuce units

DETECTION AND ALARM SYSTEM

- 4 channel H2S monitor
- 4 wireless H2S monitors
- H2S alarm system (Audible/Red strobe)
- Personal gas monitor for each person on location
- Gas sample tubes

WELL CONTROL EQUIPMENT

- Flare line with remote ignitor and backup flare gun, placed 150’ from wellhead
- Choke manifold with remotely operated choke
- Mud gas separator

VISUAL WARNING SYSTEMS

- One color code condition sign will be placed at each entrance reflecting possible conditions at the site
- A colored condition flag will be on display, reflecting current condition at the site at the time
- At least 4 wind socks placed on location, visible at all angles and locations

MUD PROGRAM

- Mud will contain sufficient weight and additives to control and minimize H2S

METALLURGY

- All drill strings, casing, tubing, wellhead, BOP, spools, kill lines, choke manifold and lines, and valves shall be suitable for anticipated H2S volume and pressure

COMMUNICATION

- Cell phones, intercoms, and satellite phones will be available on location

ADDITIONAL SAFETY RELATED ITEMS

- Stretcher
- 2 OSHA full body harness
- 20# class ABC fire extinguisher

DETERMINATION OF RADIUS OF EXPOSURE

Potentially hazardous volume means a volume of gas of such H2S concentration and flow rate that it may result in radius of exposure-calculated ambient concentrations of 100 ppm H2S at any occupied residence, school, church, park, school bus stop, place of business or other area where the public could reasonably be expected to frequent, or 500 ppm H2S at any Federal, State, County or municipal road or highway.

Currently there are no residence located within the ROE

Radius of exposure means the calculation resulting from using the Pasquill -Gifford derived equation, or by such other method(s) that may be approved by the authorized officer.
Advanced Fire and Safety has provided the Pasquill-Gifford formula in excel format for simple calculations.

NEW MEXICO OIL & GAS CONSERVATION DIVISION 118

Donkey Kong 1 Fed Com 501H

H2S Concentration- 80 PPM (Block 13)

Maximum Escape Volume- 2400 MCF/Day (Block 13)

100 PPM Radius of Exposure (Block 15)- 36
(Formula= 1.589 x (B5/1000000) x (B6 x 1000) x .6258

500 PPM Radius of Exposure (Block 16)- 16
Formula= .4546 x (B5/1000000) x (B6 x 1000) x .6258

EMERGENCY CONTACT LIST

911 is available in the area			
NAME	**POSITION**	**COMPANY**	**NUMBER**
Centennial Contacts			
Ronny Hise	Drilling Engineer	CDEV	432-770-4786
Jason Fitzgerald	Superintendent	CDEV	318-347-3916
Brett Thompson	Drilling Manager	CDEV	720-656-7027
Derrick Melton	HSE Manager	CDEV	432-315-0118
Patt 588 Drilling Office	Drilling Supervisor	CDEV	432-232-3043
Local Emergency Response			
Fire Department			575-395-2511
Jal Community Hospital			505-395-2511
State Police			505-827-9000
Lea County Sheriff			575-396-3611
Safety Contractor			
Advanced Safety	Office	Advanced Safety	833-296-3913
Jarvis Lister	Permian Supervisor	Advanced Safety	337-344-7150
Clint Hudson	Operations Manager	Advanced Safety	337-552-8330
Well Control Company			
Wild Well Control			866-404-9564
Contractors			
Tommy E Lee	Pump Trucks		432-813-7140
Kevin Reed	Drilling Fluids	AES	432-684-7101
Compass Coordinators	Cement	Compass	432-561-5970

Centennial Resource Production, LLC hereby requests to use a CO-Flex Choke line on Patterson 588 for the Donkey Kong 1 Fed Com 501/502/503 wells. The Flex Hose specifications are listed on the following pages.

ContiTech

CONTITECH RUBBER Industrial Kft.	No: QC-DB-212 / 2015
	Page: 5 / 77

QUALITY CONTROL INSPECTION AND TEST CERTIFICATE				CERT. N°: 692
PURCHASER: ContiTech Oil & Marine Corp.				P.O. N°: 4500513244
CONTITECH RUBBER order N°: 540332	HOSE TYPE: 3" ID			Choke and Kill Hose
HOSE SERIAL N°: 69902	NOMINAL / ACTUAL LENGTH:			7,62 m / 7,62 m
W.P. 68,9 MPa 10000 psi	T.P. 103,4 MPa 15000 psi			Duration: 60 min.

Pressure test with water at ambient temperature

See attachment. (1 page)

COUPLINGS Type	Serial N°		Quality	Heat N°	
3" coupling with	7676	7843	AISI 4130	627881	J3796
3 1/16" 10K API Swivel Flange end			AISI 4130	036282	
Hub			AISI 4130	J3796	

NOT DESIGNED FOR WELL TESTING **API Spec 16 C**

Fire Rated **ASSET No.: 25491** **Temperature rate:"B"**

All metal parts are flawless

WE CERTIFY THAT THE ABOVE HOSE HAS BEEN MANUFACTURED IN ACCORDANCE WITH THE TERMS OF THE ORDER INSPECTED AND PRESSURE TESTED AS ABOVE WITH SATISFACTORY RESULT.

STATEMENT OF CONFORMITY: We hereby certify that the above items/equipment supplied by us are in conformity with the terms, conditions and specifications of the above Purchaser Order and that these items/equipment were fabricated inspected and tested in accordance with the referenced standards, codes and specifications and meet the relevant acceptance criteria and design requirements.

COUNTRY OF ORIGIN HUNGARY/EU

Date:	Inspector	Quality Control
31. March 2015.		ContiTech Industrial Kft. Quality Control

ATTACHMENT OF QUALITY CONTROL INSPECTION AND TEST CERTIFICATE *No: 691, 692*

File Name : 004880_69901,69902.GEV,...,004891_69901,69902.GEV
File Message : 69901,69902
Device Type : GX10
Serial No. : S5P606399
Data Count : 1345

Sampling Int. : 5.000 sec
Start Time : 2015/03/31 01:05:40.000
Stop Time : 2015/03/31 02:57:40.000

Print Group : Press-Temp
Print Range : 2015/03/31 01:05:40.000 - 2015/03/31 02:57:40.000

Data No.	Cursor A	Cursor B	Difference
	592	1312	720
Absolute Time	2015/03/31 01:55:00.000	2015/03/31 02:55:00.000	01:00:00.000
Tag Comment	Value A	Value B	Value B-A
Pressure[bar]	1064.32	1032.08	-12.24
Ambient Temperature[°C]	21.99	22.11	0.12

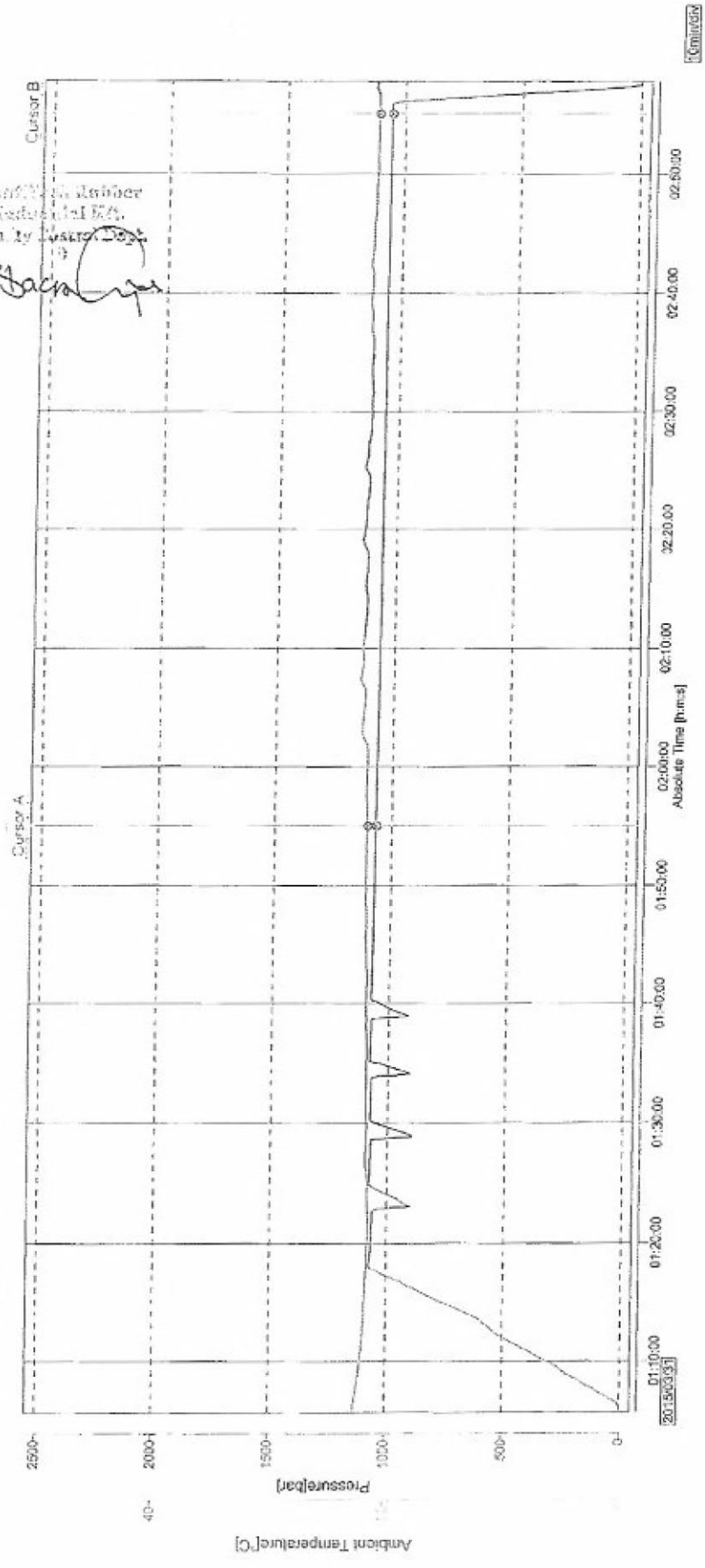

Hose Data Sheet

CRI Order No.	540332
Customer	ContiTech Oil & Marine Corp.
Customer Order No	4500513244 CBC671899
Item No.	1
Hose Type	Flexible Hose
Standard	**API SPEC 16C**
Inside dia in inches	3
Length	25 ft
Type of coupling one end	FLANGE 3.1/16" 10KPSI API SPEC 17D SV SWIVEL FLANGE C/W BX154 ST.STINLAID R.GR. SOUR
Type of coupling other end	FLANGE 3.1/16" 10KPSI API SPEC 17D SV SWIVEL FLANGE C/W BX154 ST.ST INLAID R.GR. SOUR
H2S service NACE MR0175	Yes
Working Pressure	10 000 psi
Design Pressure	10 000 psi
Test Pressure	15 000 psi
Safety Factor	2,25
Marking	USUAL PHOENIX
Cover	FIRE RESISTANT
Outside protection	Plastic spiralguard
Internal stripwound tube	No
Lining	OIL + GAS RESISTANT SOUR
Safety clamp	Yes
Lifting collar	Yes
Element C	Yes
Safety chain	Yes
Safety wire rope	No
Max.design temperature [°C]	100
Min.design temperature [°C]	-20
Min. Bend Radius operating [m]	1,00
Min. Bend Radius storage [m]	1,00
Electrical continuity	The Hose is electrically continuous
Type of packing	WOODEN CRATE ISPM-15

Patterson 588
Choke Manifold – 10M

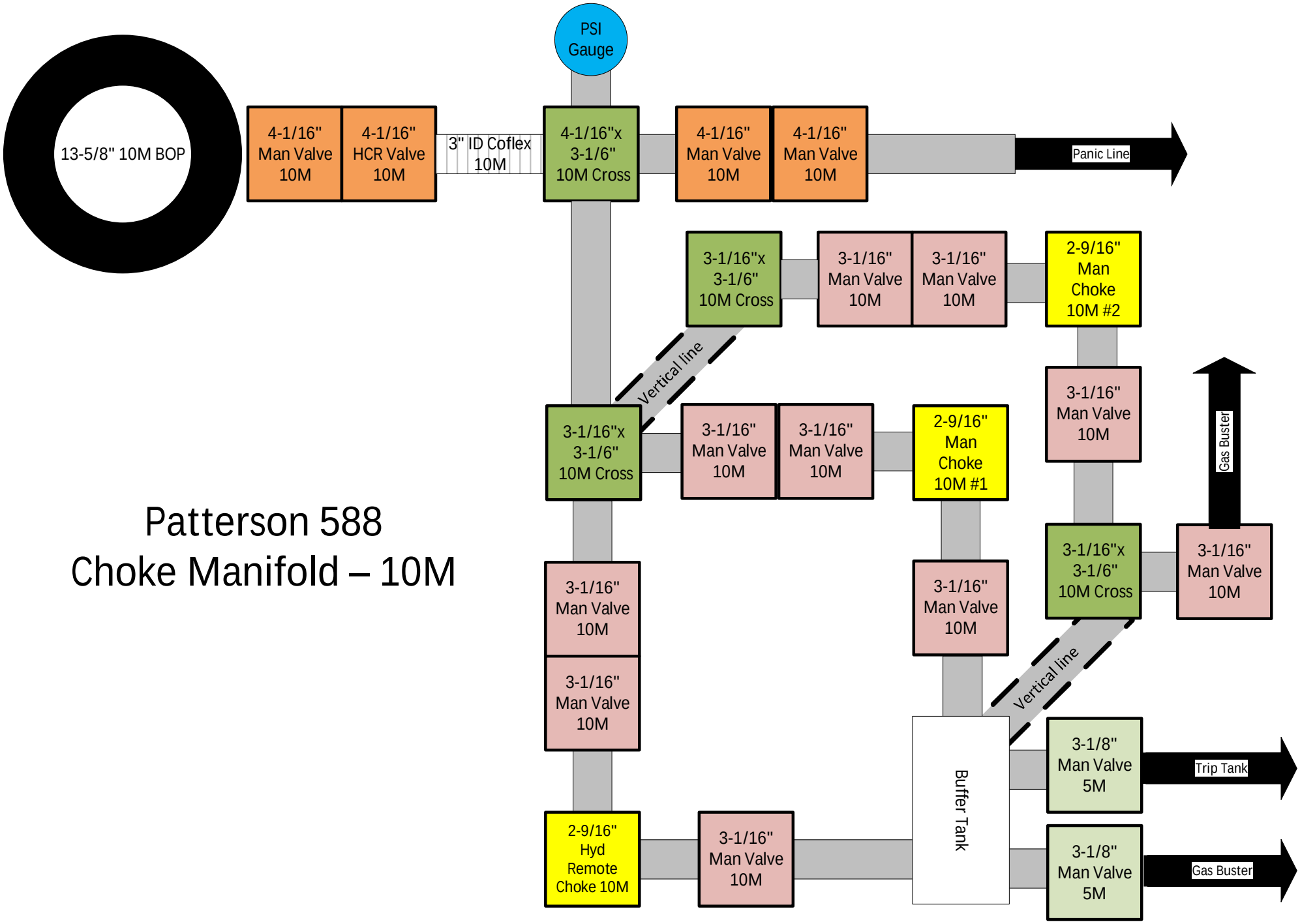

Patterson 588