Synergy Oil & Gas, Inc.

Brown State Well #28-1

Lea County, NM

AFTER P & A

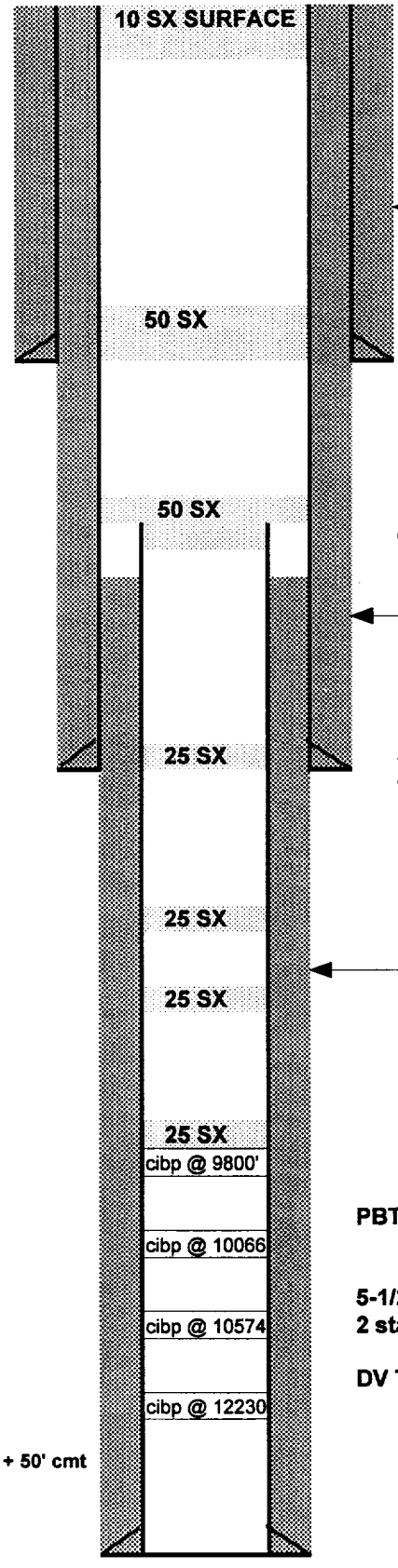

17-1/2" hole

50 SX FROM 450'-250'

13 3/8" 48# H-40 Csg set at 460' cmt'd w/ 350 sx Class "C". Circulated 50 sx

50 SX FROM 1650'-1450'

CASING CUT @ 1600'

12-1/4" hole

25 SX FROM 4175'-3825'

8-5/8" 24# & 32# K-55 Csg @ 4120' Cmt w/ 2000 sx Class "C" + gel & 150 sx Class "C" Circulated 400 sx

25 SX FROM 5750'-5400'

7-7/8" hole

25 SX FROM 6950'-6650'

25 SX ON TOP OF CIBP

Perfs: 9,832'-838' CIBP @ 9800' + 150' cmt

PBTD=10031'

Perfs: 10,116'-286' CIBP @ 10,066' + 35' cmt

5-1/2" 17# N-80 & S-95 Casing set at 12493'
2 stage cement-1: 1800 sx "H"
2: 700 50:50 Poz:"C"
DV Tool @ 5757'

Perfs: 10,624'-632' CIBP @ 10,574' + 35' cmt

Perfs: 12,328'-334', 12,356'-374' CIBP @ 12,230 + 50' cmt
Perfs: 12,390'-408' squeezed w/ 100 sx "H"

TD = 12493'

Received