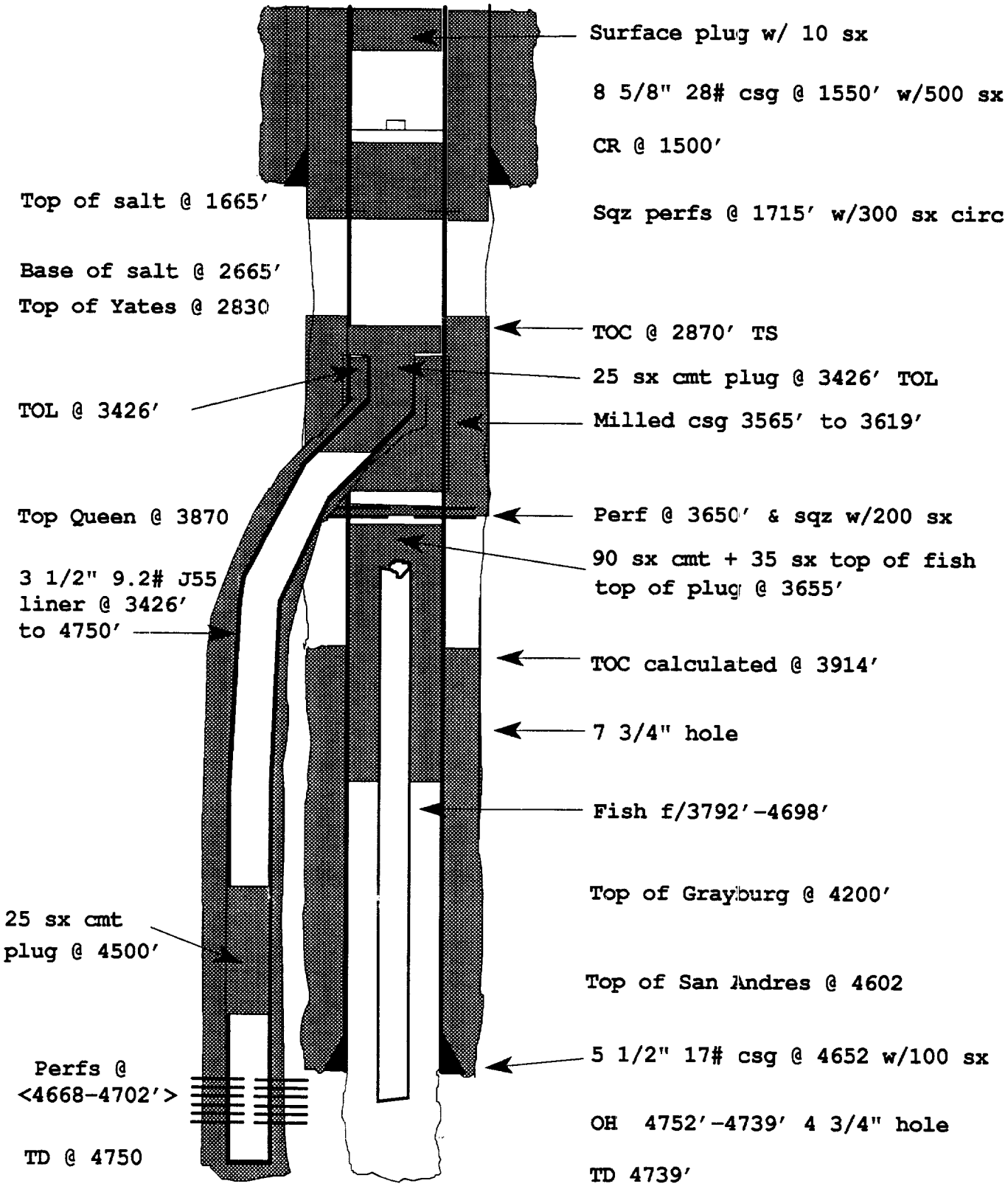STATE VACUUM #2, LEA CO., NEW MEXICO
PROPOSED WELLBORE