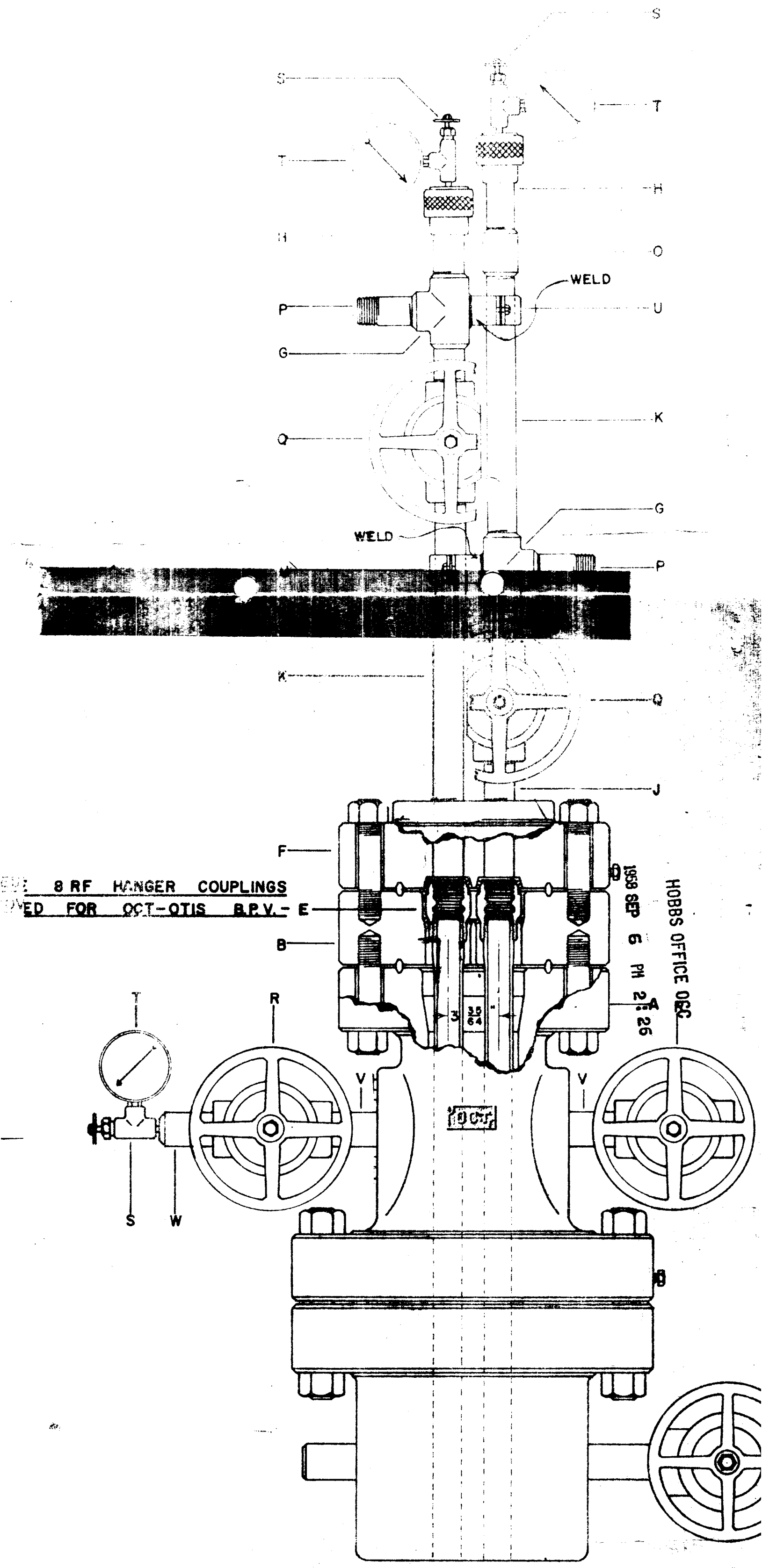
S
T
H
O
WELD
U
K
G
P
Q
J
F
D
E
B
A
R
V
W
8 RF HANGER COUPLINGS
ED FOR OCT-OTIS B.P.V.
1958 SEP 6 PM 2:26
HOBBS OFFICE OGC
DUAL TUBING SUSPENSION ASSEMBLY
NO. X-1427-K
OIL CENTER TOOL CO.
HOUSTON TEXAS
11-2-56
P.W.
H.F.
FOR R. OLSEN OIL CO.