NEW MEXICO OIL CONSERVATION COMMISSION

SANTA FE, NEW MEXICO

7-3-58

APPLICATION FOR DUAL COMPLETION

Field Name	County	Date
Blinebry Gas	Lea	September 22, 1958

Operator	Lease	Well No.
Magnolia Petroleum Company	J. N. Carson	2

Location of Well	Unit	Section	Township	Range
	H	33	21 South	37 East

1. Has the New Mexico Oil Conservation Commission heretofore authorized the dual completion of a well in these same pools or in the same zones within one mile of the subject well? YES X NO ____
2. If answer is yes, identify one such instance: Order No. DC-8 ; Operator, Lease, and Well No.:

Magnolia Petroleum Company E. O. Carson No. 8

3. The following facts are submitted:	Upper Zone	Lower Zone
a. Name of reservoir	Blinebry	Tubb
b. Top and Bottom of Pay Section (Perforations)	5473 5700	6068 6224
c. Type of production (Oil or Gas)	Gas	Gas
d. Method of Production (Flowing or Artificial Lift)	Flow	Flow

4. The following are attached. (Please mark YES or NO)

Yes a. Diagrammatic Sketch of the Dual Completion, showing all casing strings, including size and setting, top of cement, perforated intervals, tubing strings, including diameters and setting depth, location and type of packers and side door chokes, and such other information as may be pertinent.

Yes b. Plat showing the location of all wells on applicant's lease, all offset wells on offset leases, and the names and addresses of operators of all leases offsetting applicant's lease.

Yes c. Waivers consenting to such dual completion from each offset operator, or in lieu thereof, evidence that said offset operators have been furnished copies of the application.*

Yes d. Electrical log of the well or other acceptable log with tops and bottoms of producing zones and intervals of perforation indicated thereon. (If such log is not available at the time application is filed, it shall be submitted as provided by Rule 112-A.)

5. List all offset operators to the lease on which this well is located together with their correct mailing address.

Gulf Oil Corporation	P. O. Box 2167	Hobbs, New Mexico
Pan American Petroleum Corporation	P. O. Box 899	Roswell, New Mexico

6. Were all operators listed in Item 5 above notified and furnished a copy of this application? YES X NO ____. If answer is yes, give date of such notification September 22, 1958.

CERTIFICATE: I, the undersigned, state that I am the Petroleum Engineer of the Magnolia Petroleum Company (company), and that I am authorized by said company to make this report; and that this report was prepared under my supervision and direction and that the facts stated therein are true, correct and complete to the best of my knowledge.

J. L. Sanders Signature

* Should waivers from all offset operators not accompany an application for administrative approval, the New Mexico Oil Conservation Commission will hold the application for a period of twenty (20) days from date of receipt by the Commission's Santa Fe office. If, after said twenty-day period, no protest nor request for hearing is received by the Santa Fe office, the application will then be processed.

NOTE: If the proposed dual completion will result in an unorthodox well location and/or a non-standard proration unit in either or both of the producing zones, then separate application for approval of the same should be filed simultaneously with this application.

DIAGRAMMATIC WELL SKETCH
J. N. Carson No. 2
Brunson Field
Lea County, New Mexico

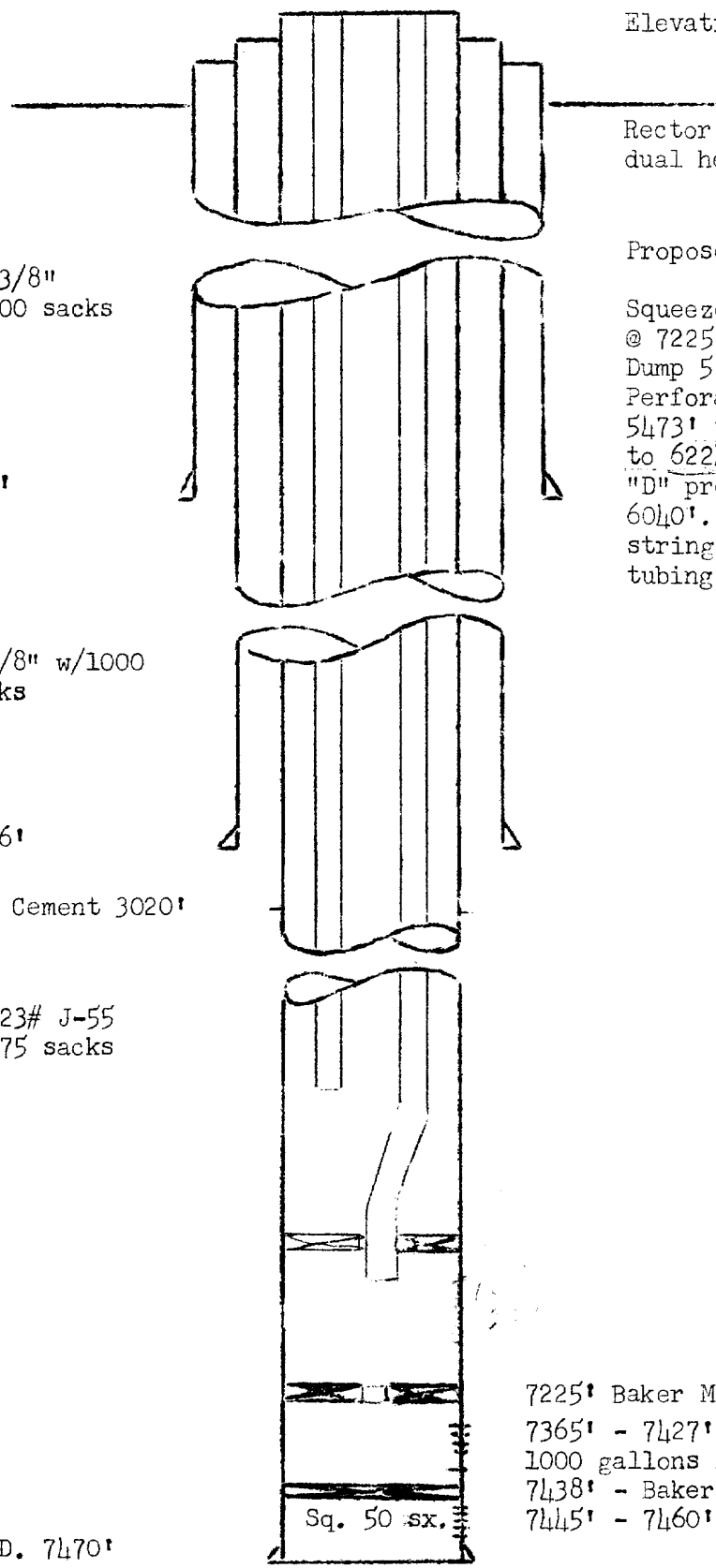

Elevation 3462' G. L.

Rector Mandrel type dual head

13-3/8" w/300 sacks

303'

9-5/8" w/1000 sacks

2966'

Top Cement 3020'

7" 23# J-55 w/775 sacks

T. D. 7470'

Proposed Recompletion:

Squeeze through Model "D" @ 7225' with 90 sacks. Dump 5' hydromite to 7220'. Perforate at intervals 5473' to 5700' and 6068' to 6224'. Set Baker Model "D" production packer @ 6040'. Complete with two strings of 2" EUE 8 RT tubing.

7225' Baker Model "D" Production Pkr.
7365' - 7427' at intervals treated w/ 1000 gallons 15% acid
7438' - Baker Model "K" Retainer
7445' - 7460'

X-6645

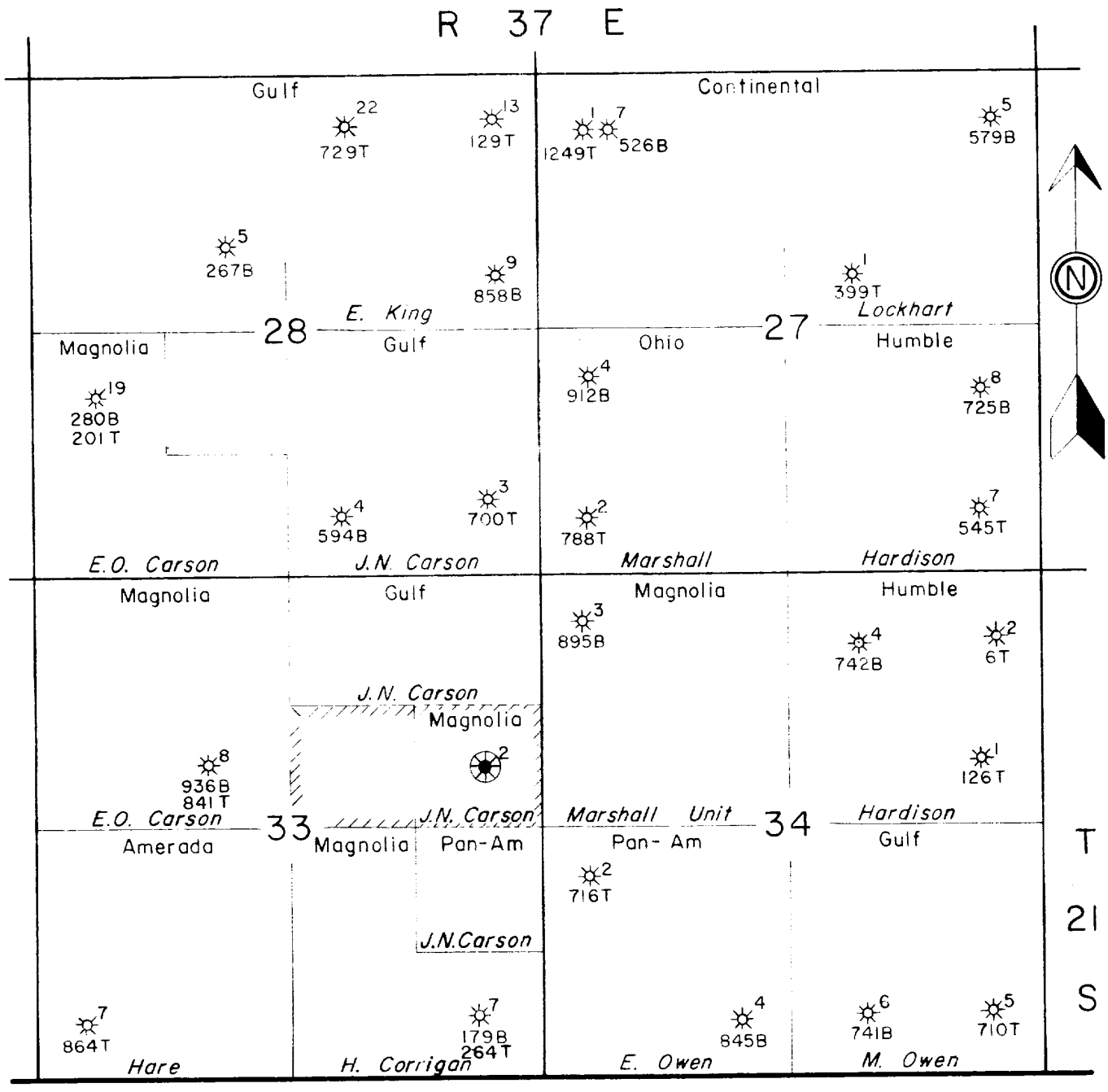

LEGEND

Proposed Gas Unit

Oil Well to be Converted to a Gas Well

179B — 1-1-58 Cumulative Blinebry Gas Production (MMCF)

264T — 1-1-58 Cumulative Tubb Gas Production (MMCF)

MAGNOLIA PETROLEUM COMPANY
PRODUCING DEPARTMENT
DALLAS - TEXAS
DISTRICT — LEA

BLINEBRY & TUBB GAS FIELDS

Lea County, New Mexico

SHEET NO.
SCALE 1" = 1600'
DATE 6-20-58
DRAWN BJB
CHECKED
APPROVED
REVISED