Federal 13-1
Sec 13, T21S, R32E
Lea County, New Mexico
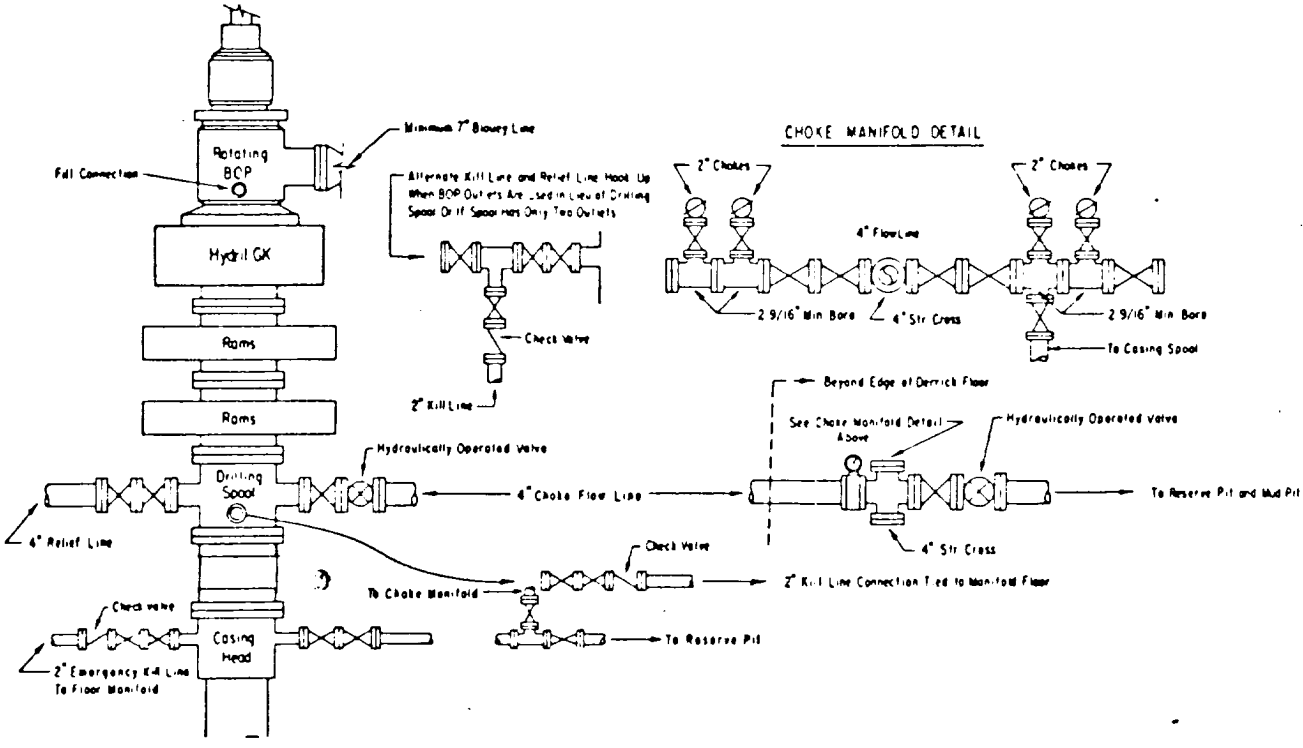
5000 psi working pressure