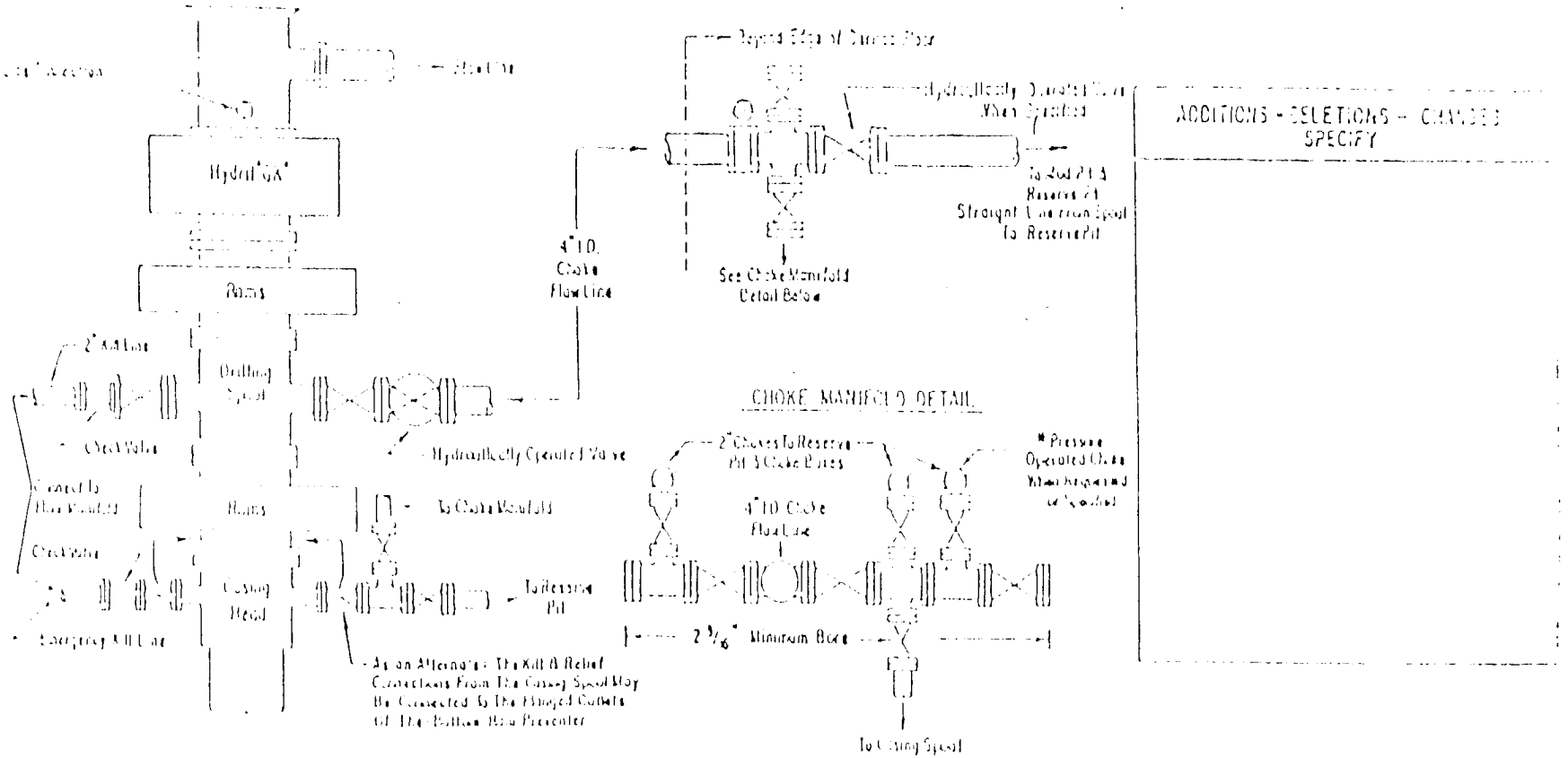

ILLEGIBLE

3000 PSI WORKING PRESSURE BLOWOUT PREVENTER HOOK-UP

The blowout preventer assembly shall consist of one blind ram preventer and one pipe ram preventer, both hydraulically operated, a Hydril "GK" preventer, valves, chokes and connections as illustrated. If a tapered drill string is used, a ram preventer must be provided for each size of drill pipe. Casing and tubing rams to fit the preventers must be available as needed. If current in use, the flanged outlets of the ram preventers must be used for connecting to the 4 inch I.D. choke flow line and kill line, except when air or gas drilling. The minimum rotary height shall be sufficient to install a rotating blowout preventer.

Minimum type utility equipment for the preventers: Hydraulically operated valves shall be as follows: (1) Multiple pumps, driven by a source of power, capable of fully charging the total accumulator volume from the nitrogen precharge pressure to the rated pressure within minutes. Also, the pumps are to be connected to the hydraulic operating system which is to be a closed system. (2) Accumulators with a total usable volume of not less than 200 PSI and connected are to receive the aforementioned fluid charge. With the charging pump shut down, the pressure of fluid will not drop below [illegible] PSI. [illegible] to close all the pressure operated devices simultaneously within [illegible] seconds, after a time, the remaining accumulator pressure shall be not less than 1000 PSI and the remaining accumulator fluid volume at least [illegible] percent of the original. (3) When operated, an alternate source of power, remote and explosion proof, is to be available to operate the closing pumps. [illegible] shall be additional pumps operated by separate power and equal in performance to the primary.

The choke manifold and lines to choke manifold shall have a separate control for each pressure operated device. Controls are to be located, with control handles indicating open and closed positions. A pressure reducer regulator must be provided for operating the Hydril preventer. When required, a second pressure reducer shall be available to fluid operating fluid pressure to non power [illegible] to 50 psi. Hydraulic oil, non explosive or better, is to be used as the fluid to operate the hydraulic equipment.

The choke manifold, choke flow line, and choke lines are to be supported by metal stands and adequately anchored. The choke flow line and choke lines shall be constructed as straight as possible and without sharp bends. Easy and safe access is to be maintained to the choke manifold. All valves are to be selected for operation in the presence of oil, gas, and drilling fluids. The choke flow line valves connected to the drilling spool and all ram type preventers must be equipped with stem extensions, universal joints if needed, and hand wheels which are to extend beyond the edge of the derrick substructure. All other valves are to be equipped with handles.