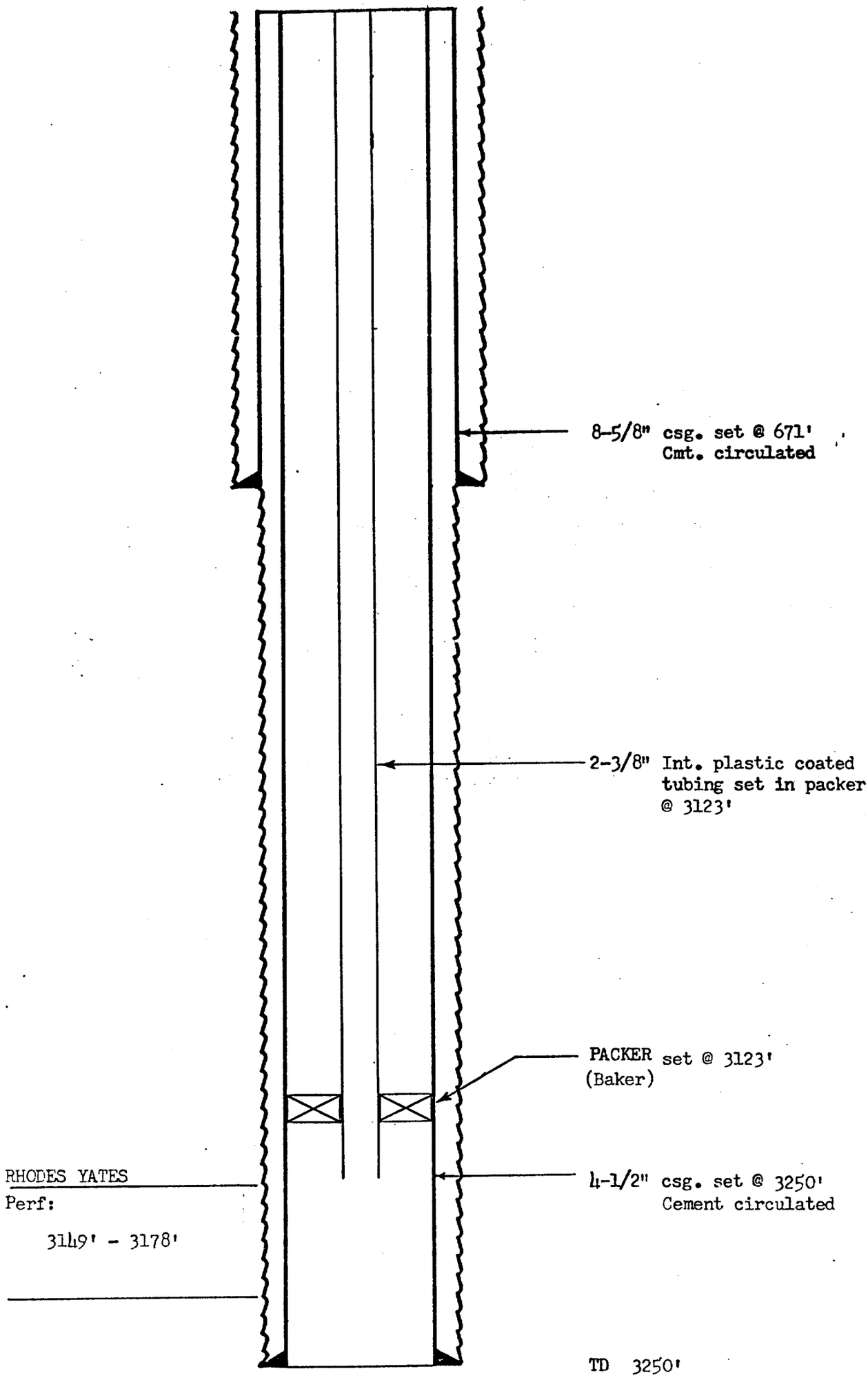

TEXACO Inc.
W.H. RHODES "B" FED. NCT-1 NO. 17 (WIW)
RHODES YATES FIELD
LEA COUNTY, NEW MEXICO

WRH/CRC 7-25-77